# NETWORKS AND MISSION SERVICES PROJECT

## STS-90 NEUROLAB FLIGHT READINESS REVIEW

## NETWORKS

## AGENDA

INTEGRATED NETWORK

- ASCENT PROFILE
- SIGNIFICANT CHANGES
- NETWORK IP CONFIGURATION
- IP CONFIGURATION CHANGES
- CONFIGURATION MANAGEMENT
- CRITICAL PERIODS
- READINESS CERTIFICATION

GARY A. MORSE
GSFC/NETWORKS
APRIL 1998

# N&MS

CODE 450.3

# STS-90 NEUROLAB NETWORKS

## STS-90 INTEGRATED NETWORK

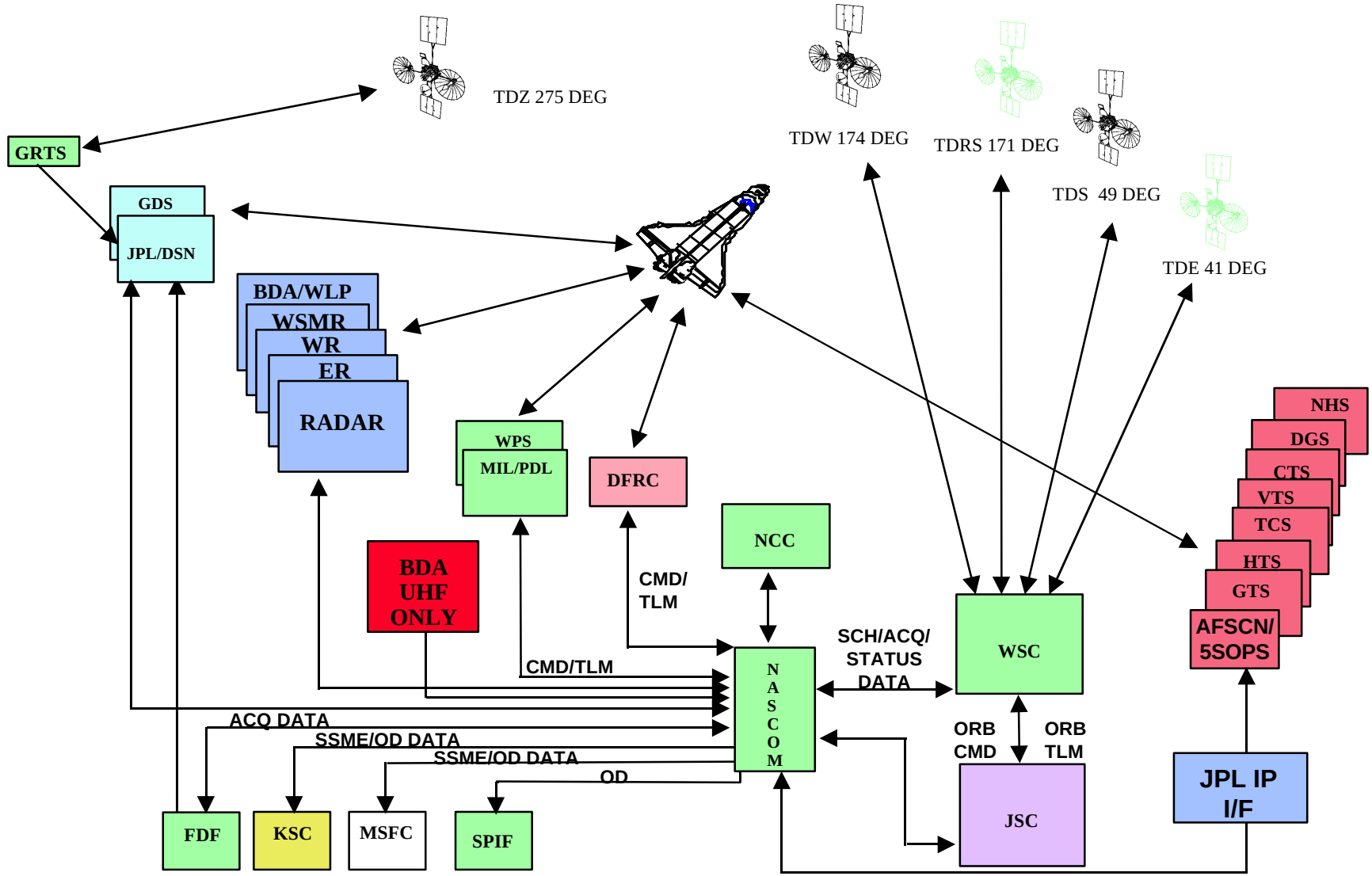

| N&MS | STS-90 NEUROLAB NETWORKS |
|---|---|
| CODE 450.3 | |

## ASCENT PROFILE

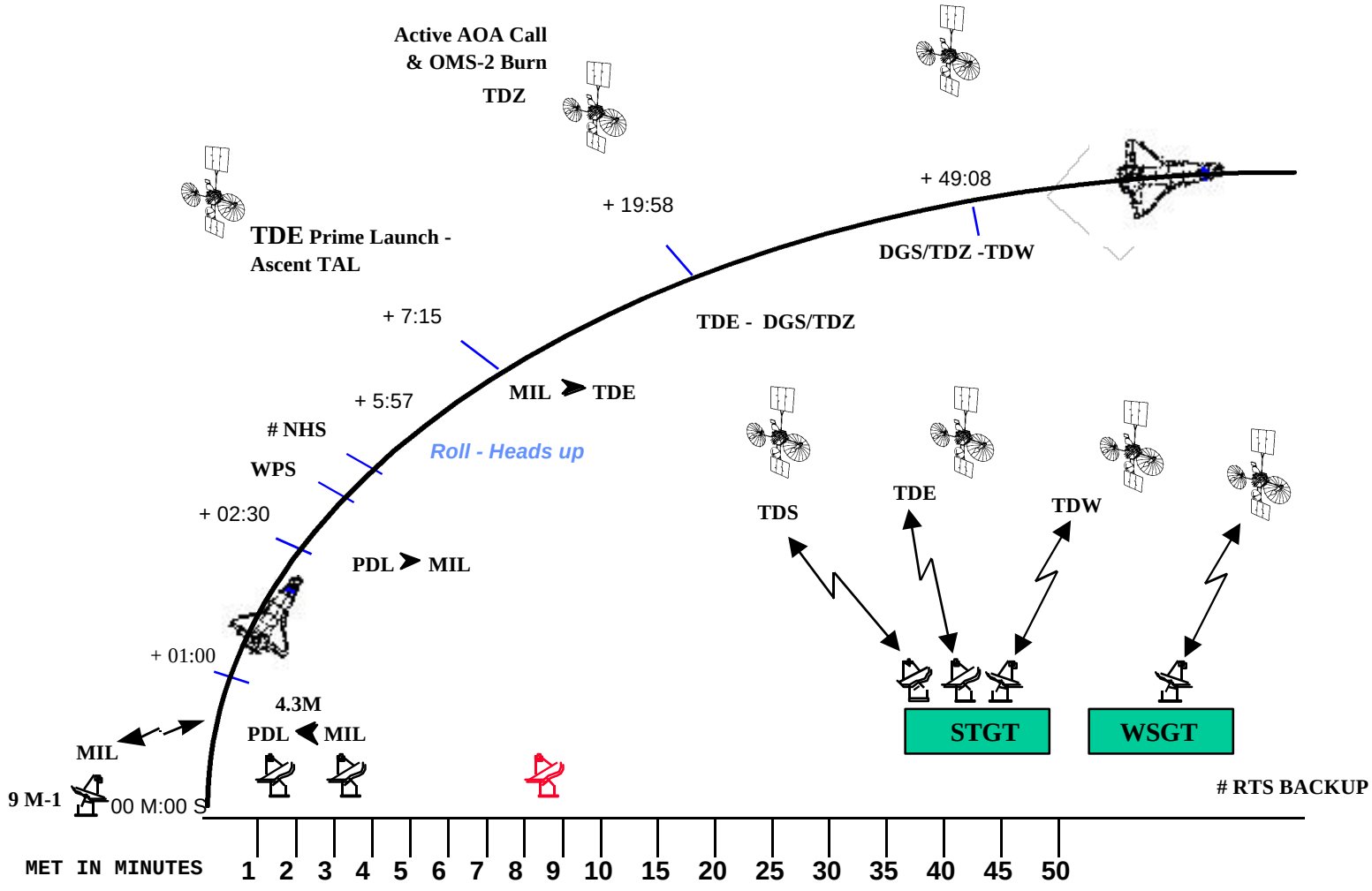

| N&MS | STS-90 NEUROLAB NETWORKS |
|---|---|
| CODE 450.3 | |

# SIGNIFICANT CHANGES

- GROUND NETWORK
  - MBR INSTALLATION UPGRADES CONTINUE AT MIL AND PDL
- DRYDEN FLIGHT RESEARCH CENTER
  - ATF-1 RETURN TO SERVICE - APRIL 1, 1998
    - REPLACED SLIP RINGS AND ELEVATION GEARBOX ASSEMBLY
    - TARGET-OF-OPPORTUNITY PASSES
- WSC
  - SOFTWARE - BASELINE 98001/98001A
    - 98001
      - DELIVERED TO SGLT-4 AND -5 AT WSGT ON FEBRUARY 25, 1998
        - SUPPORT OF SGLT-6 INTERFACE FOR GUAM PROJECT
    - 98001A
      - DELIVERED TO ALL SYSTEMS - UPDATED TDRS DATABASES ONLY
        - WSGT - FEBRUARY 25, 1998, STGT - MARCH 4, 1998, AND CARP - FEBRUARY 25, 1998

| N&MS | STS-90 NEUROLAB NETWORKS |
|---|---|
| CODE 450.3 | |

# SIGNIFICANT CHANGES (CONT)

- WSC (CONT)
  - HARDWARE
    - SGLT-4 HAS BEEN REMOVED FROM THE CDCN LAN FOR H, I, J TESTING AND WILL NOT BE AVAILABLE AGAIN UNTIL MAY 12, 1998 FOLLOWING SUCCESSFUL BACKWARD COMPATIBILITY TESTING ON H, I, J MODIFIED EQUIPMENT
- C-BAND RADAR
  - ASTC SCHEDULED DOWN FOR RELOCATION JUNE 1997 TO
  - WLPC SCHEDULED DOWN FOR SYSTEM UPGRADES JANUARY 1998 THROUGH JULY 1998

| N&MS | STS-90 NEUROLAB NETWORKS |
|---|---|
| CODE 450.3 | |

# NETWORK IP CONFIGURATION

- PRELAUNCH/LAUNCH
  - CONFIGURE SN ELEMENTS (NCC/FDF/JSC/WSC) IN IP MODE
  - GROUND NETWORK (MIL/PDL/WPS) CONFIGURE RETURN LINK IP AND FORWARD LINK LEGACY
- ON-ORBIT
  - NCC/FDF/JSC/WSC REMAIN ON IP FOR ON-ORBIT MISSION SUPPORT
  - SSME PLAYBACK DATA FLOW TO MSFC TO CHECKOUT IP CONFIGUATION
- LANDING
  - ALL SN ELEMENTS CONFIGURE IP AS PRIME FOR LANDING SUPPORT
  - MIL/DFRC CONFIGURED FOR RETURN LINK IP AND FORWARD LINK

# IP CONFIGURATION CHANGES

- FOUR PTPS WERE PROVIDED TO JSC FOR HANDLING IP DATA
  - TWO FOR PROCESSING THE SHUTTLE KU-BAND CHANNEL 2 960/1024 K DUMP DATA
  - TWO FOR PROCESSING THE GN 192K TELEMETRY
- A NEW NASCOM 2000 CIRCUIT WAS CONFIGURED OUT OF JSC FOR 72K GN COMMANDING
- SMALL CONVERSION DEVICE (SCD) SOFTWARE RELEASE 4.2 WAS INSTALLED IN THE SCD'S AT JSC
  - ALLOWS CIRCUIT ASSURANCE BLOCKS (CAB) PROCESSING BY THE SCD'S SIMILAR TO THE MDM

| N&MS | STS-90 NEUROLAB NETWORKS |
|---|---|
| CODE 450.3 | |

# DATA SUPPORT CONFIGURATION FOR STS-90

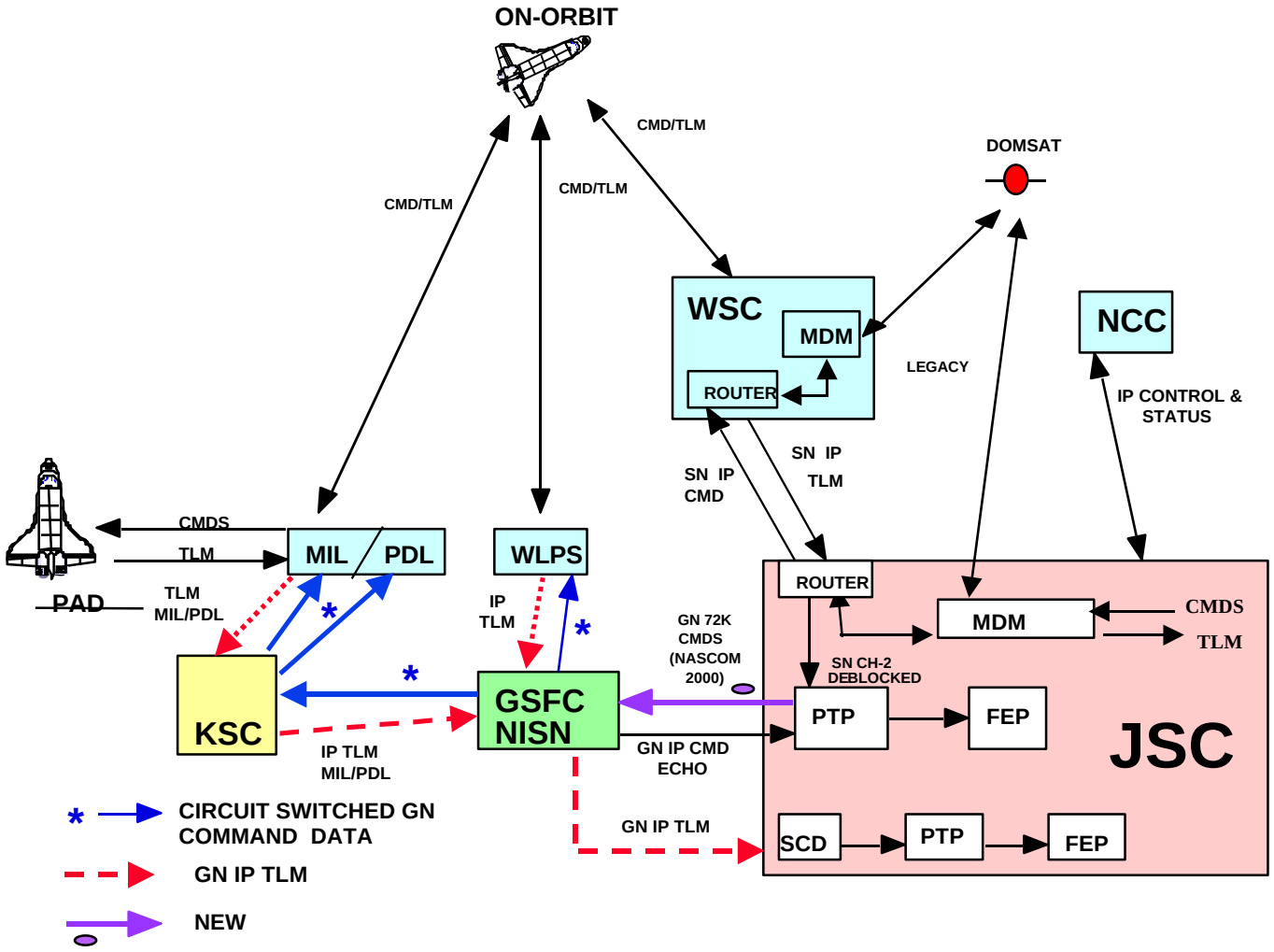

# N&MS

## CODE 450.3

# STS-90 NEUROLAB NETWORKS

# STS-90 TEST SCHEDULE

| ID | Task Name |
|---|---|
| 1 | **STS-90 Test Schedule** |
| 2 | MIL TLM Test - MIL/MOSA/JSC |
| 3 | SN Data Flow - JSC/MSFC/WSC |
| 4 | OAFB IP Test - MOSA/OAS |
| 5 | MIL 192 Kb Data Flow - MIL/JSC/MOSA |
| 6 | NEUROLAB Data Flow - JSC/AMES/KSC |
| 7 | Wallops Ip Data Flow - WLPS/MOSA |
| 8 | DRFC Data Flow - DFRC/MOSA |
| 9 | JIS #2 - JSC/KSC/AMES/GSFC |
| 10 | NEUROLAB Data Flow - JSC/AMES/KSC |
| 11 | GN Command/ A/G C/O - MIL/PDL/JSC/KSC |
| 12 | MIL BER (24 Hour) - NISN/MIL |
| 13 | NEUROLAB Data Flow - JSC/AMES/KSC |
| 14 | GN Loading Test - MIL/PDL/DFRC/WLPS |
| 15 | JIS #3 - JSC/KSC/AMES |
| 16 | GN IP Test - DFRC/OAS/JSC/MOSA |
| 17 | TCDT(SOO17) - KSC/JSC/MIL |
| 18 | GN Loading Test - MIL/PDL/DRFC/WLPS |
| 19 | RPS SSME D/F - KSC/JSC/MIL |
| 20 | MIL TLM/CMD (16-Hours) |
| 21 | Range Safety Test - ER/KSC/JSC/MIL/WSC |
| 22 | SN ORT - JSC/ESTL/WSC/GSFC |
| 23 | SN Ver/Val - JSC/SN/NCC |
| 24 | Launch |

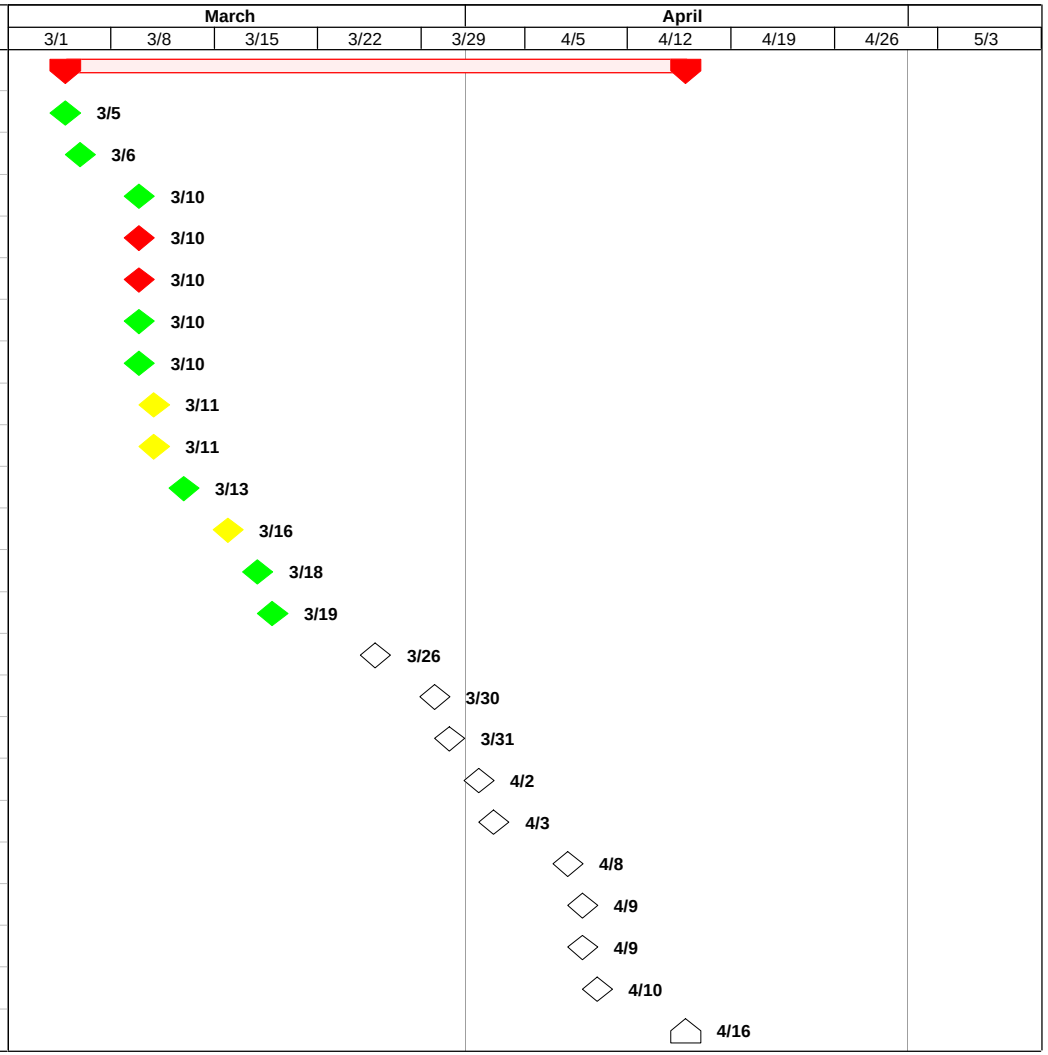

# CONFIGURATION MANAGEMENT

- HARDWARE/SOFTWARE FREEZE
  - INTEGRATED NETWORKS FREEZE WILL BE IMPOSED PRIOR TO THE SPACE NETWORK VER/VAL OR LAUNCH MINUS 7 DAYS, WHICHEVER COMES FIRST
  - EXEMPTIONS ARE APPROVED BY THE NETWORK DIRECTOR AND APPROPRIATE PROJECT HEADS
- CRITICAL PERIOD
  - CRITICAL PERIODS HAVE BEEN IDENTIFIED
  - MAINTENANCE AND TESTING RESTRICTIONS APPLY

# SPACE SHUTTLE CRITICAL PERIODS

| *EVENT* | *START* | *STOP* |
|---|---|---|
| LAUNCH RENDEZVOUS MISSION | LAUNCH -4 HOURS | LAST RENDEZVOUS BURN ON FD1 |
| LAUNCH NON-RENDEZVOUS MISSION | LAUNCH -4 HOURS | "GO FOR ORBIT OPS" |
| PAYLOAD DEPLOY | DEPLOY -3 HOURS | FINAL SEP BURN (+1 ORBIT DELAY) |
| RENDEZVOUS/DOCKING | 2 HOURS PRIOR TO FIRST DAY OF RENDEZVOUS BURN (~CREW WAKEUP) | HATCH OPENING (+1 ORBIT DELAY FOR CONTINGENCY) |
| RENDEZVOUS GRAPPLE/RETRIEVE | 2 HOURS PRIOR TO FIRST DAY OF RENDEZVOUS BURN (~CREW WAKEUP) | PAYLOAD BERTHING (+1 ORBIT DELAY FOR CONTINGENCY) |
| UNDOCKING | UNDOCKING - 3 HOURS | FINAL SEP BURN (+1 ORBIT DELAY) |
| EVA | EVA EGRESS - 1 HOUR | EVA INGRESS + 1 HOUR |
| LANDING | TD - 5 HOURS | WOW |

# Goddard Space Flight Center

## *CERTIFICATE OF FLIGHT PROJECTS DIRECTORATE NETWORKS READINESS*

***THIS IS TO CERTIFY THAT WITH SUCCESSFUL COMPLETION OF FLIGHT READINESS PREPARATIONS AND CLOSURE OF ASSOCIATED ACTION ITEMS, ALL INTEGRATED NETWORKS AND MISSION SERVICES ELEMENTS ARE READY TO SUPPORT THE STS-90/NEUROLAB MISSION.***

| | | |
|---|---|---|
| 3/16/98 | | 3/16/98 |
| **G. A. MORSE/NASA**<br>**SPACE SHUTTLE**<br>**NETWORK DIRECTOR** | **DATE** | **W. MACK/NASA**<br>**OFFICE OF FLIGHT**<br>**ASSURANCE** | **DATE** |
| 3/16/98 | 3/16/98 for | 3/16/98 |
| **W. WATSON/NASA**<br>**GSFC CENTER DATA**<br>**SERVICES MANAGER** | **DATE** | **R. N. HARRIS/NASA**<br>**GSFC CENTER MISSION**<br>**SERVICES MANAGER** | **DATE** | for **W. FRIEDMAN/ATSC**<br>**VICE PRESIDENT**<br>**GSFC PROGRAMS** | **DATE** |
| 3/16/98 | 3/19/98 for | |
| **R. FLAHERTY/NASA**<br>**SPACE NETWORK PROJECT** | **DATE** | **S. CURRIER/NASA**<br>**GROUND NETWORK**<br>**PROJECT** | **DATE** | **T. SOBCHAK/NASA**<br>**SPACE SHUTTLE**<br>**NETWORKS TEST MANAGER** | **DATE** |

| N&MS | STS-90 NEUROLAB NETWORKS |
|---|---|
| CODE 450.3 | |

# BACKUP

# N&MS

## CODE 450.3

# STS-90 NEUROLAB NETWORKS

## NEUROLAB NETWORK DATA FLOW

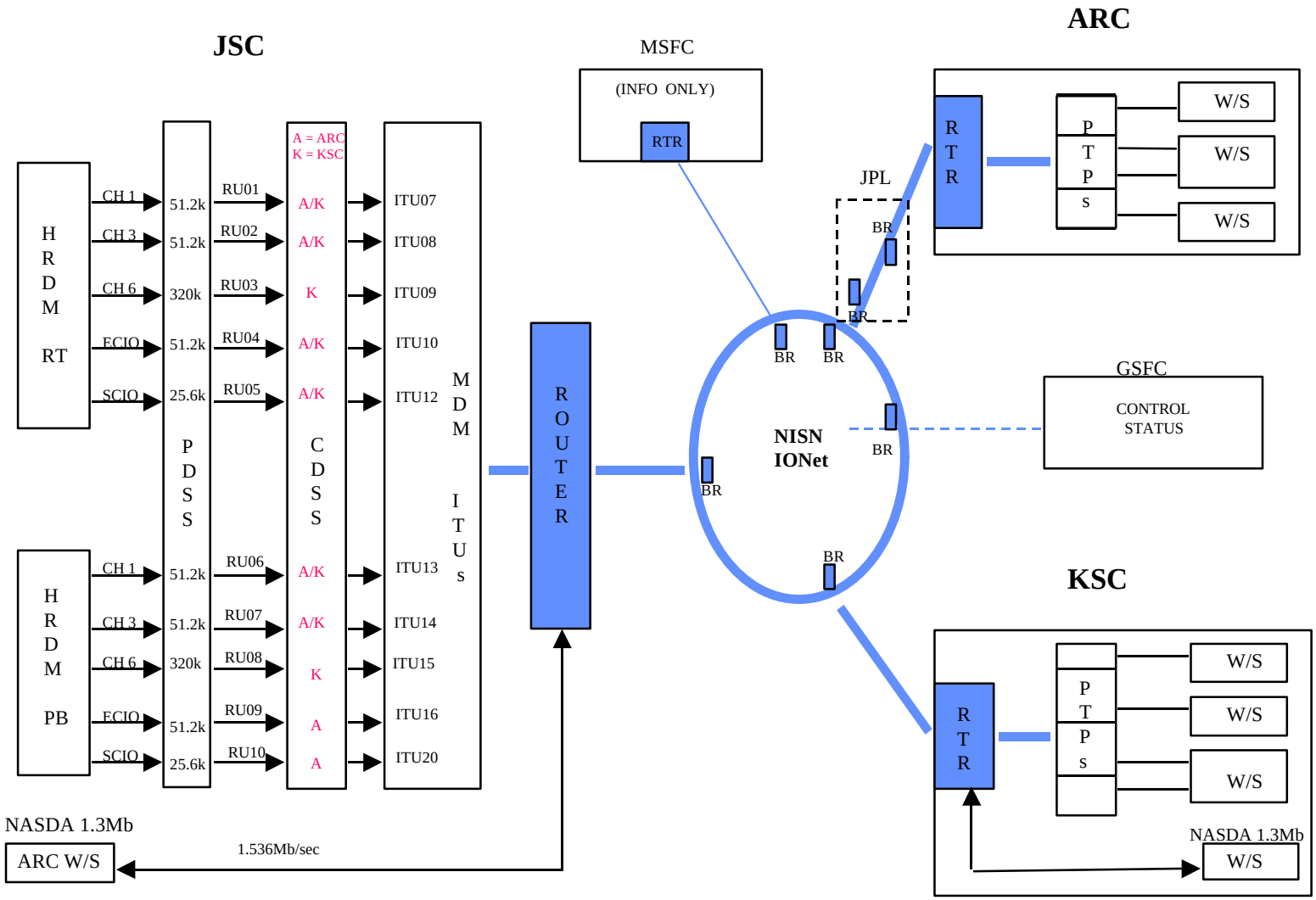

| N&MS | STS-90 NEUROLAB NETWORKS |
|---|---|
| CODE 450.3 | |

# JSC K-BAND CHANNEL 2, 72K COMMAND AND 72K COMMAND ECHO CONFIGURATION

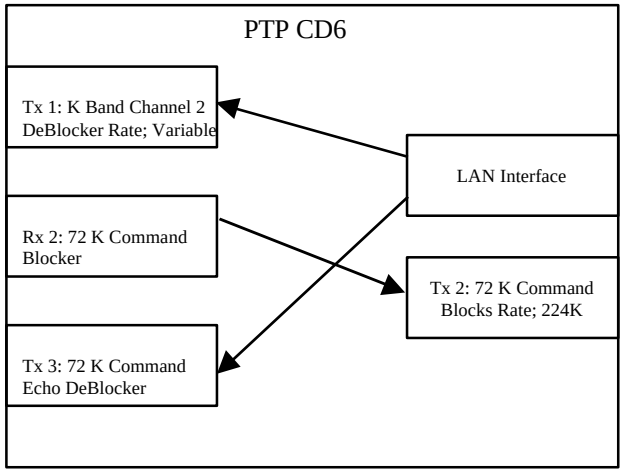


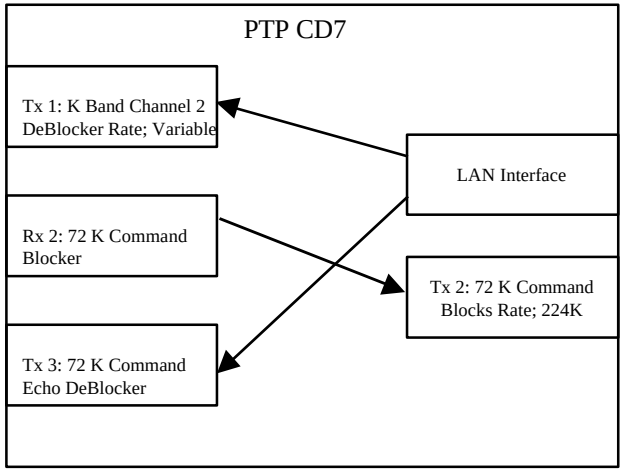

| N&MS | STS-90 NEUROLAB NETWORKS |
|---|---|
| CODE 450.3 | |

# JSC CONVERSION DEVICE CONFIGURATION FOR 192K OD SMOOTHING

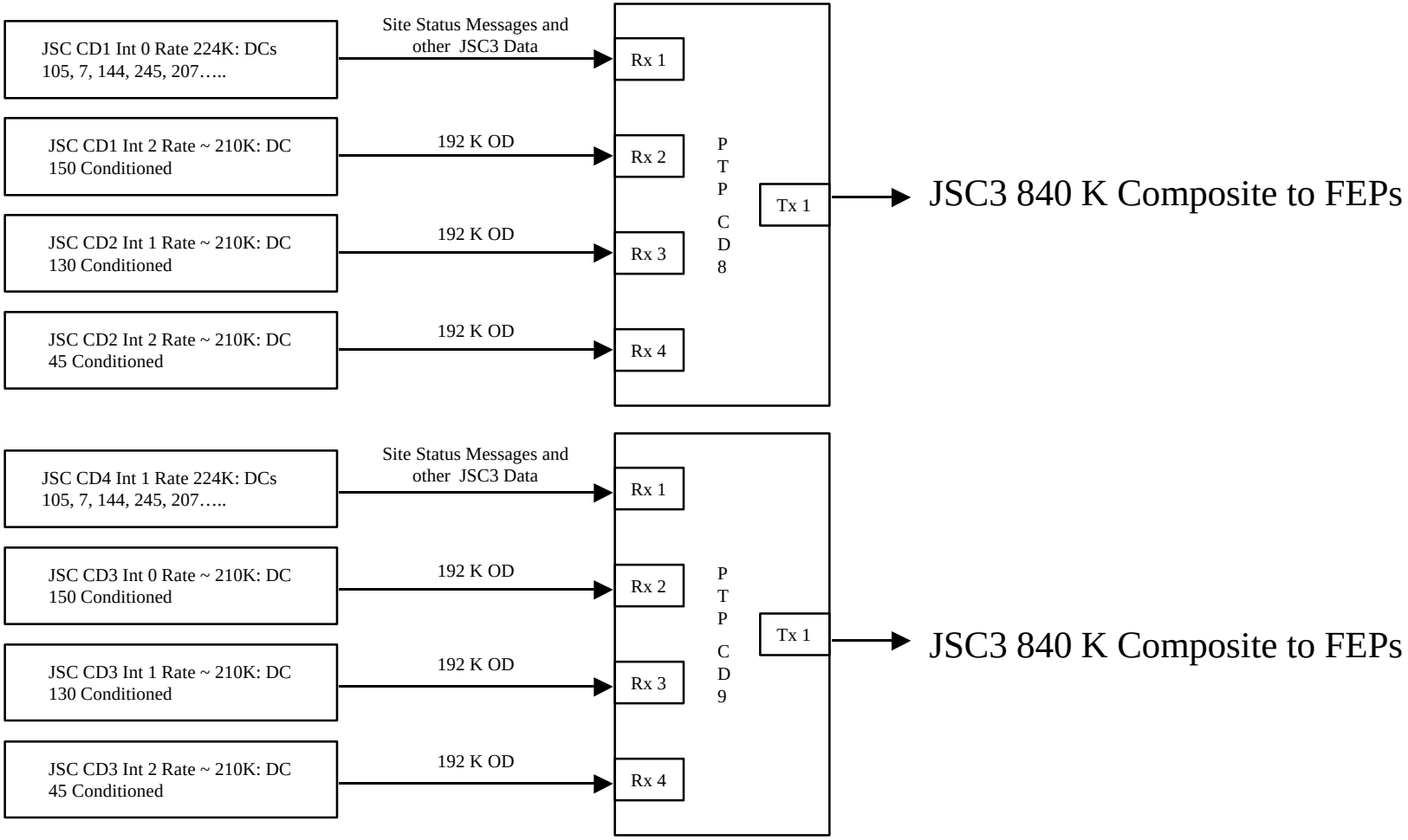

| N&MS | STS-90 NEUROLAB NETWORKS |
|---|---|
| CODE 450.3 | |

# 72 KILOBIT SHUTTLE COMMAND HIGH LEVEL

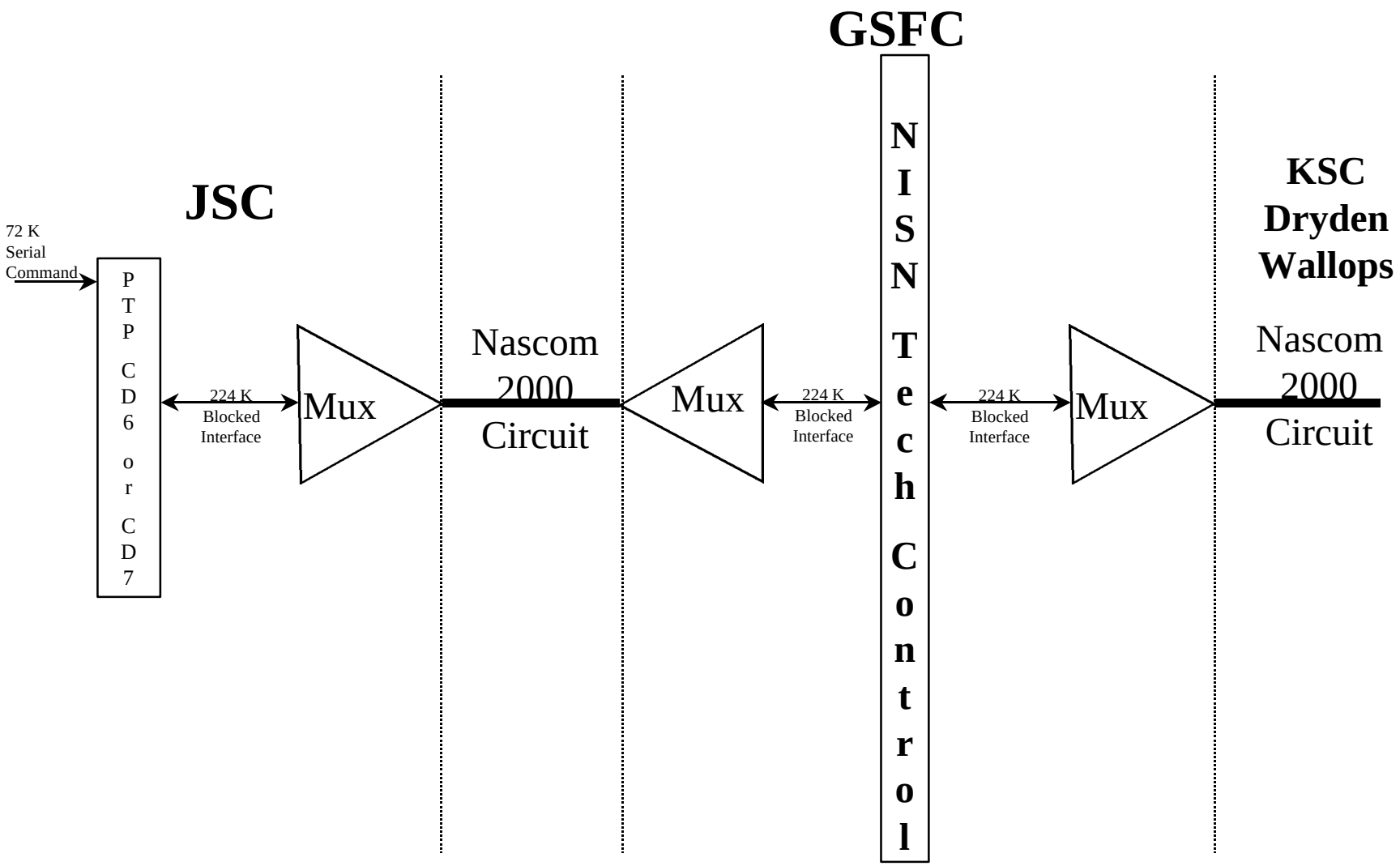

| N&MS | STS-90 NEUROLAB NETWORKS |
|---|---|
| CODE 450.3 | |
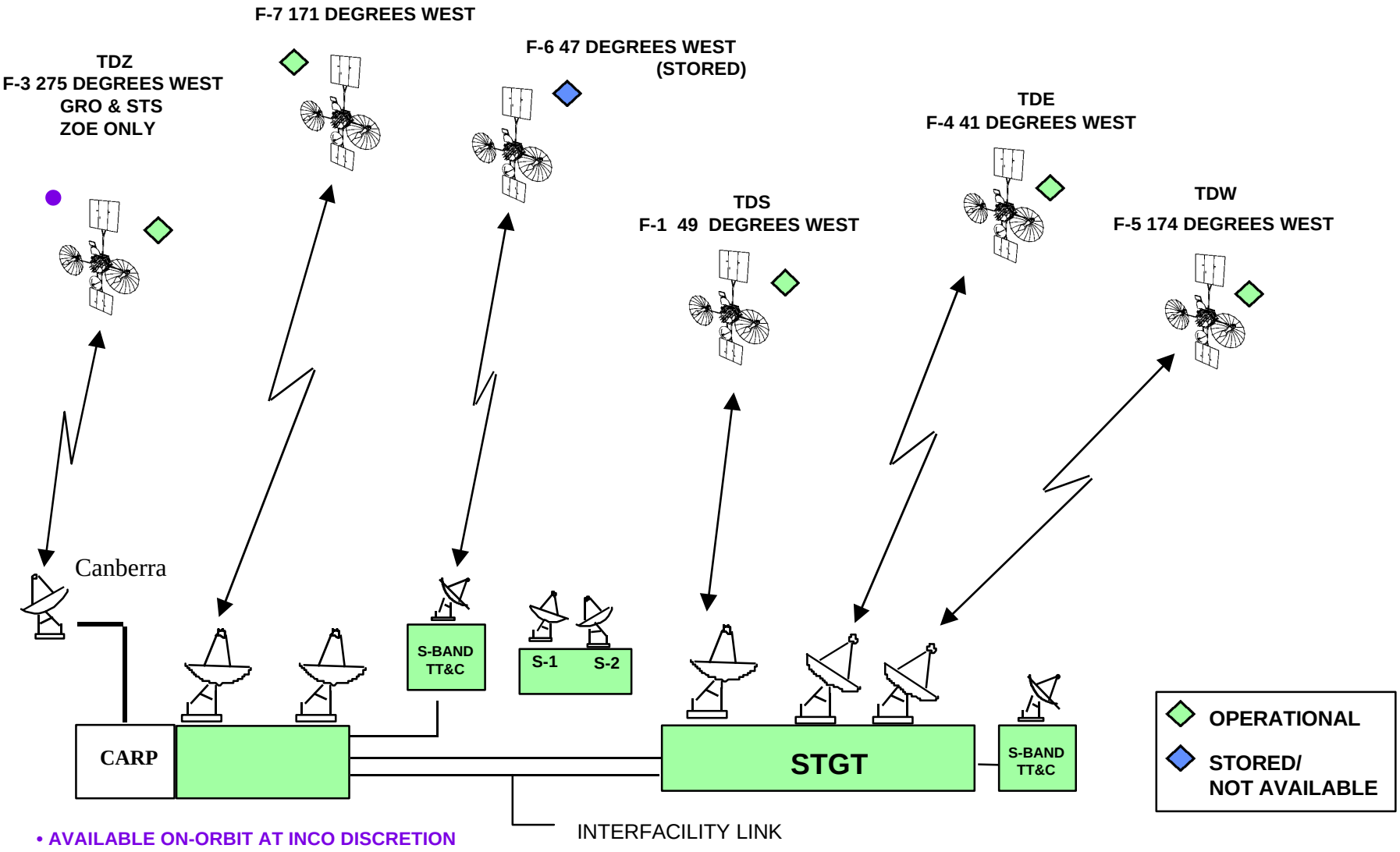
# TDRSS CONSTELLATION