NETWORKS AND MISSION SERVICES PROJECT

STS-91 S/MM-09/SPACEHAB-DM FLIGHT READINESS REVIEW

NETWORKS

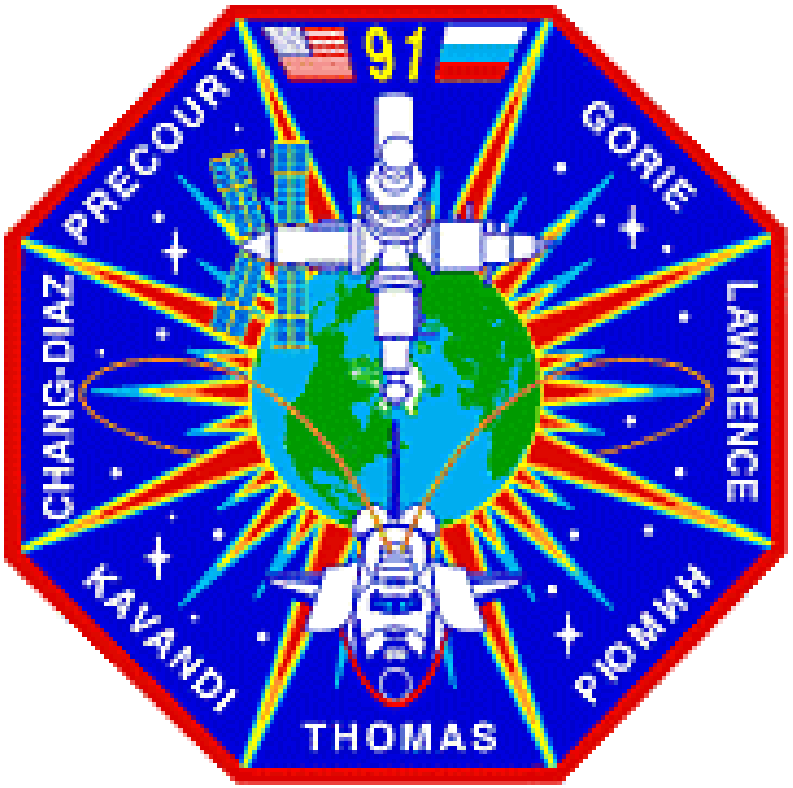

AGENDA

- INTEGRATED NETWORKS
- SIGNIFICANT CHANGES
- JSC/MIR COMMUNICATIONS
- CONFIGURATION MANAGEMENT
- CRITICAL PERIODS
- READINESS CERTIFICATION

GARY A. MORSE
GSFC/NETWORKS
MAY 1998

N&MS	STS-91 S/MM-09/SPACEHAB-DM NETWORKS
CODE 450	

STS-91 INTEGRATED NETWORKS

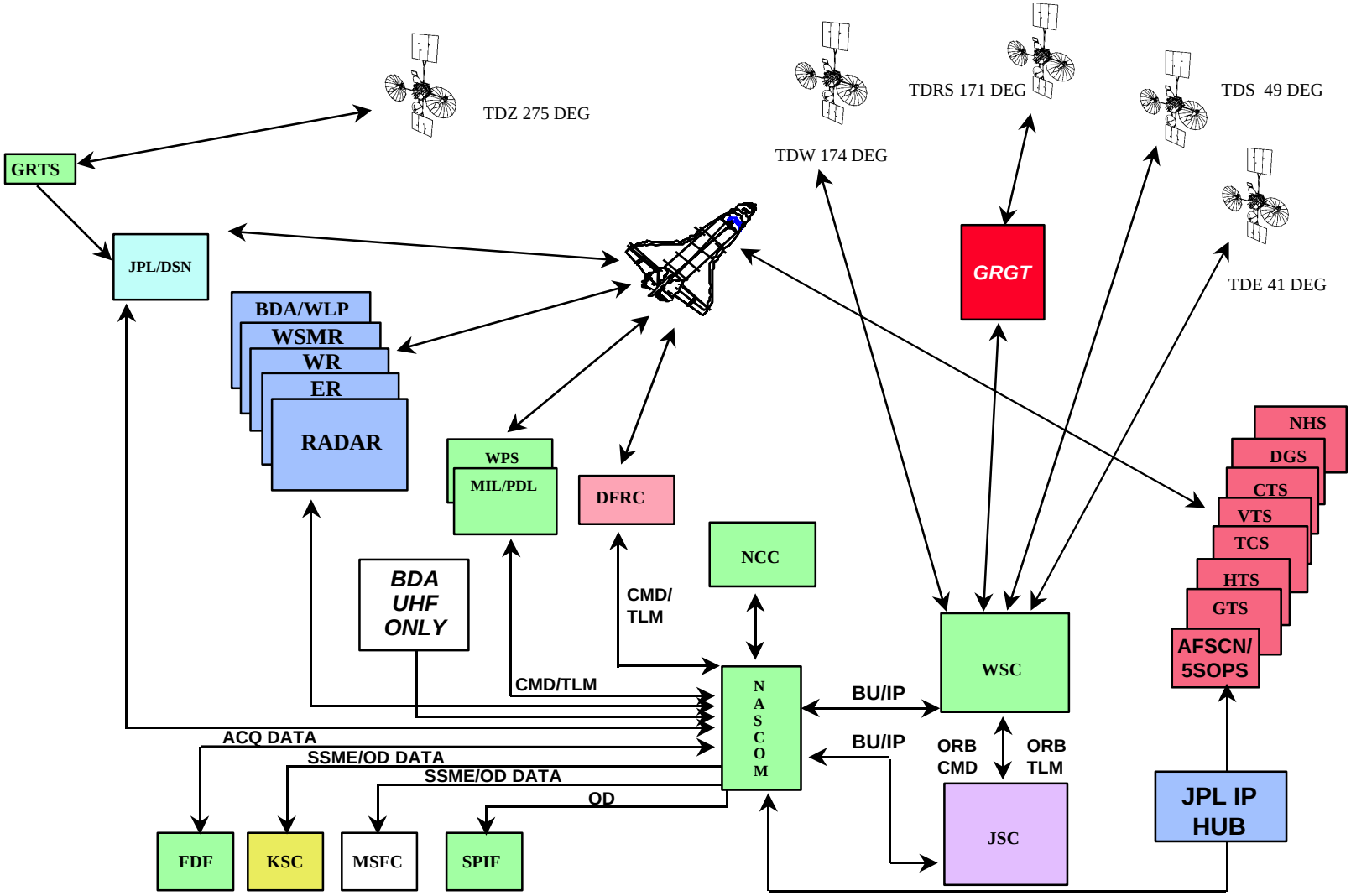

SIGNIFICANT CHANGES

- GROUND NETWORK
  - MIL/PDL AUTOMATION UPGRADES CONTINUE
    - MIL/PDL NCPS TWO-WAY ON-ORBIT ENGINEERING PASSES
    - DEMONSTRATE RECENTLY IMPLEMENTED MBR HARDWARE CAPABILITIES
      - TERRESTRIAL MULTIPLEX LINK
      - TRACKING ACQUISITION PROCESSOR AT PDL
      - COMMAND SWITCHING EQUIPMENT
      - NEW DATA BLOCKERS
  - DRYDEN FLIGHT RESEARCH CENTER (DFRC) (PLANNED)
    - ATF-1 PRIME FOR ALL SUPPORT (REPLACED GDS ON-ORBIT SUPPORT)
    - ATF-2 DOWN FOR UPGRADES POST STS-91
  - CONTINUE ON-ORBIT IP ENGINEERING PASSES AT WPS/DFRC/MIL/RTS

SIGNIFICANT CHANGES (CONT)

- SPACE NETWORK
  - WSC
    - SOFTWARE 98001C
      - DELIVERED TO WSGT ON MAY 4, 1998 AND TO STGT ON MAY 5, 1998
      - WORKSTATION FIX FOR THE YEAR 2000 PROBLEM
    - FIRMWARE (ETN 216 AND 231)
      - GUAM MA CODE TO ALL SGLT'S
- MIR VHF UPGRADES
  - WLPS AND WSC POWER AMPLIFIERS UPGRADED TO 350 WATTS

SIGNIFICANT CHANGES (CONT)

- GUAM REMOTE GROUND TERMINAL (GRGT)
  - ON-ORBIT ENGINEERING PASSES PLANNED
  - S-/Ku-BAND FORWARD/RETURN
  - TRANSITION FROM 171° W TO 275° W ON JUNE 9, 1998
  - TDZ (VIA AUSTRALIA/GRTS) AVAILABLE FOR UNDOCKING AND DE-ORBIT SUPPORT
- C-BAND RADAR
  - ASTC SCHEDULED DOWN FOR RELOCATION JUNE 1997 TO JUNE 1998
  - WLPC SCHEDULED DOWN FOR SYSTEM UPGRADES JANUARY 1998 THROUGH JULY 1998

SIGNIFICANT CHANGES (CONT)

- INTERNET PROTOCOL (IP)
  - SOFTWARE
    - JSC SMALL CONVERSION DEVICE (SCD) TO LEVEL 4.3
      - INCORPORATES CLOCK TRACKING CAPABILITY
    - IP ROUTERS TO LEVEL 12.01
      - ENABLES AUTOMATIC REROUTE OF FAILED T-1'S
  - HARDWARE
    - JSC MDM OTU CARDS UPDATED
      - ±1% CLOCK TRACKING INSTITUTED FOR OPS RCDR DUMP
      - SHADOW TESTING ONLY
- PRELAUNCH/LAUNCH/ON-ORBIT/LANDING
  - SN ELEMENTS (NCC/FDF/JSC/WSC) IN IP MODE
  - ALL OTHER ELEMENTS ON LEGACY
  - ON-ORBIT GROUND NETWORK STATION IP TESTS MAY BE CONDUCTED

N&MS

CODE 450

STS-91 S/MM-09/SPACEHAB-DM NETWORKS

MIR/SOYUZ COMMUNICATIONS UPDATE

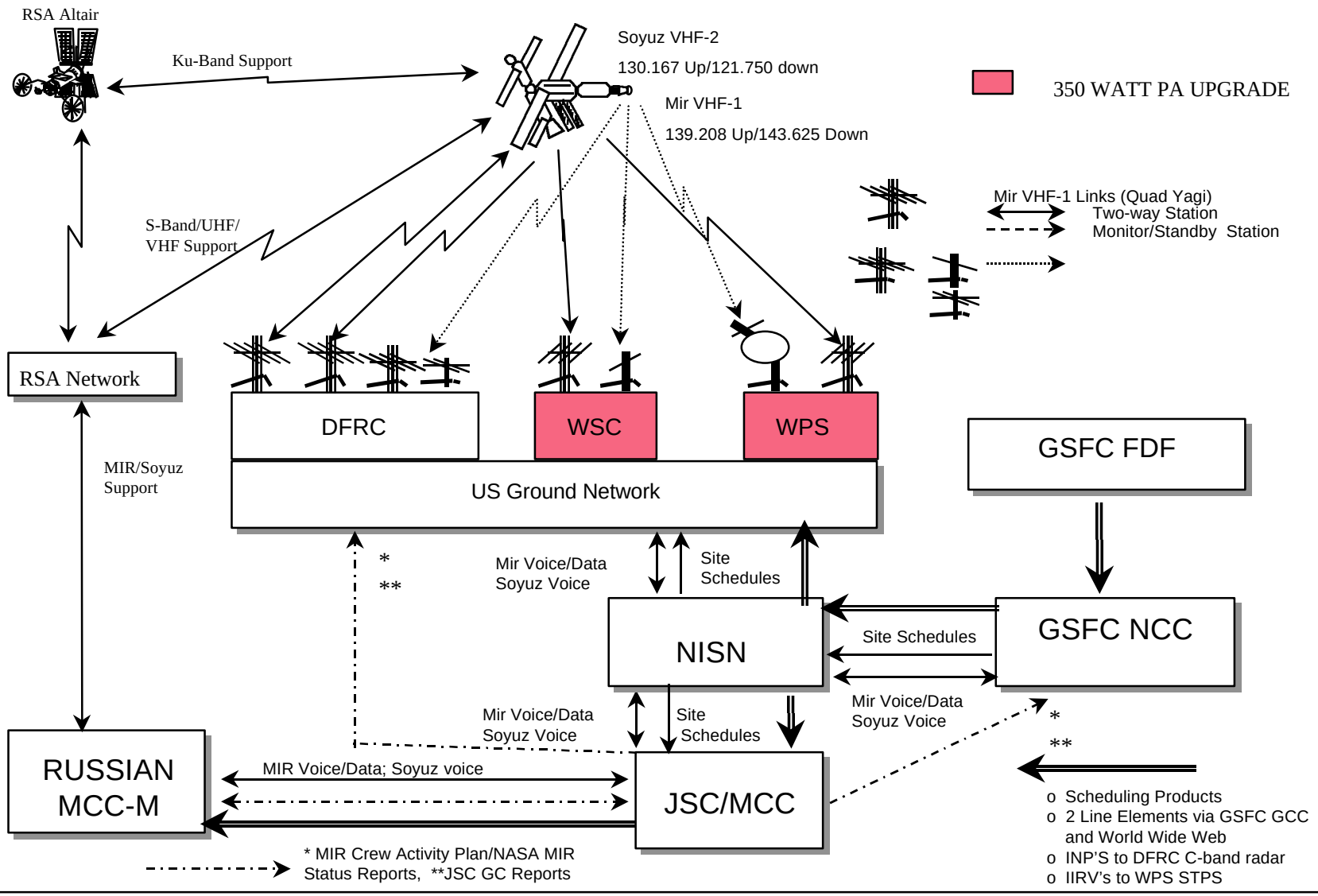

CONFIGURATION MANAGEMENT

- HARDWARE/SOFTWARE FREEZE
  - INTEGRATED NETWORKS FREEZE WILL BE IMPOSED PRIOR TO THE SPACE NETWORK VER/VAL OR LAUNCH MINUS 7 DAYS, WHICHEVER COMES FIRST
  - EXEMPTIONS ARE APPROVED BY THE NETWORK DIRECTOR AND APPROPRIATE PROJECT HEADS
- CRITICAL PERIOD
  - CRITICAL PERIODS HAVE BEEN IDENTIFIED
  - MAINTENANCE AND TESTING RESTRICTIONS APPLY

SPACE SHUTTLE CRITICAL PERIODS

EVENT	*START*	*STOP*
LAUNCH RENDEZVOUS MISSION	LAUNCH -4 HOURS	LAST RENDEZVOUS BURN ON FD1
LAUNCH NON-RENDEZVOUS MISSION	LAUNCH -4 HOURS	"GO FOR ORBIT OPS"
PAYLOAD DEPLOY	DEPLOY -3 HOURS	FINAL SEP BURN (+1 ORBIT DELAY)
RENDEZVOUS/DOCKING	2 HOURS PRIOR TO FIRST DAY OF RENDEZVOUS BURN (~CREW WAKEUP)	HATCH OPENING (+1 ORBIT DELAY FOR CONTINGENCY)
RENDEZVOUS GRAPPLE/RETRIEVE	2 HOURS PRIOR TO FIRST DAY OF RENDEZVOUS BURN (~CREW WAKEUP)	PAYLOAD BERTHING (+1 ORBIT DELAY FOR CONTINGENCY)
UNDOCKING	UNDOCKING - 3 HOURS	FINAL SEP BURN (+1 ORBIT DELAY)
EVA	EVA EGRESS - 1 HOUR	EVA INGRESS + 1 HOUR
LANDING	TD - 5 HOURS	WOW

Goddard Space Flight Center

CERTIFICATE OF FLIGHT PROJECTS DIRECTORATE NETWORKS READINESS

THIS IS TO CERTIFY THAT WITH SUCCESSFUL COMPLETION OF FLIGHT READINESS PREPARATIONS AND CLOSURE OF ASSOCIATED ACTION ITEMS, ALL INTEGRATED NETWORKS AND MISSION SERVICES ELEMENTS ARE READY TO SUPPORT THE STS-91 S/MM-09/SPACEHAB-DM MISSION.

4/30/98		4/30/98
G. A. MORSE/NASA **DATE**		**W. MACK/NASA** **DATE**
SPACE SHUTTLE NETWORK DIRECTOR		**OFFICE OF FLIGHT ASSURANCE**
4/30/98	for 4/30/98	for 4/30/98
W. WATSON/NASA **DATE**	**R. N. HARRIS/NASA** **DATE**	**W. FRIEDMAN/ATSC** **DATE**
GSFC CENTER DATA SERVICES MANAGER	**GSFC CENTER MISSION SERVICES MANAGER**	**VICE PRESIDENT GSFC PROGRAMS**
4/30/98	for 4/30/98	4/30/98
R. FLAHERTY/NASA **DATE**	**S. CURRIER/NASA** **DATE**	**T. SOBCHAK/NASA** **DATE**
SPACE NETWORK PROJECT	**GROUND NETWORK PROJECT**	**SPACE SHUTTLE NETWORKS TEST MANAGER**

STS-91 S/MM-09/SPACEHAB-DM NETWORKS

BACKUP

N&MS	STS-91 S/MM-09/SPACEHAB-DM NETWORKS
CODE 450	

TDRSS CONSTELLATION

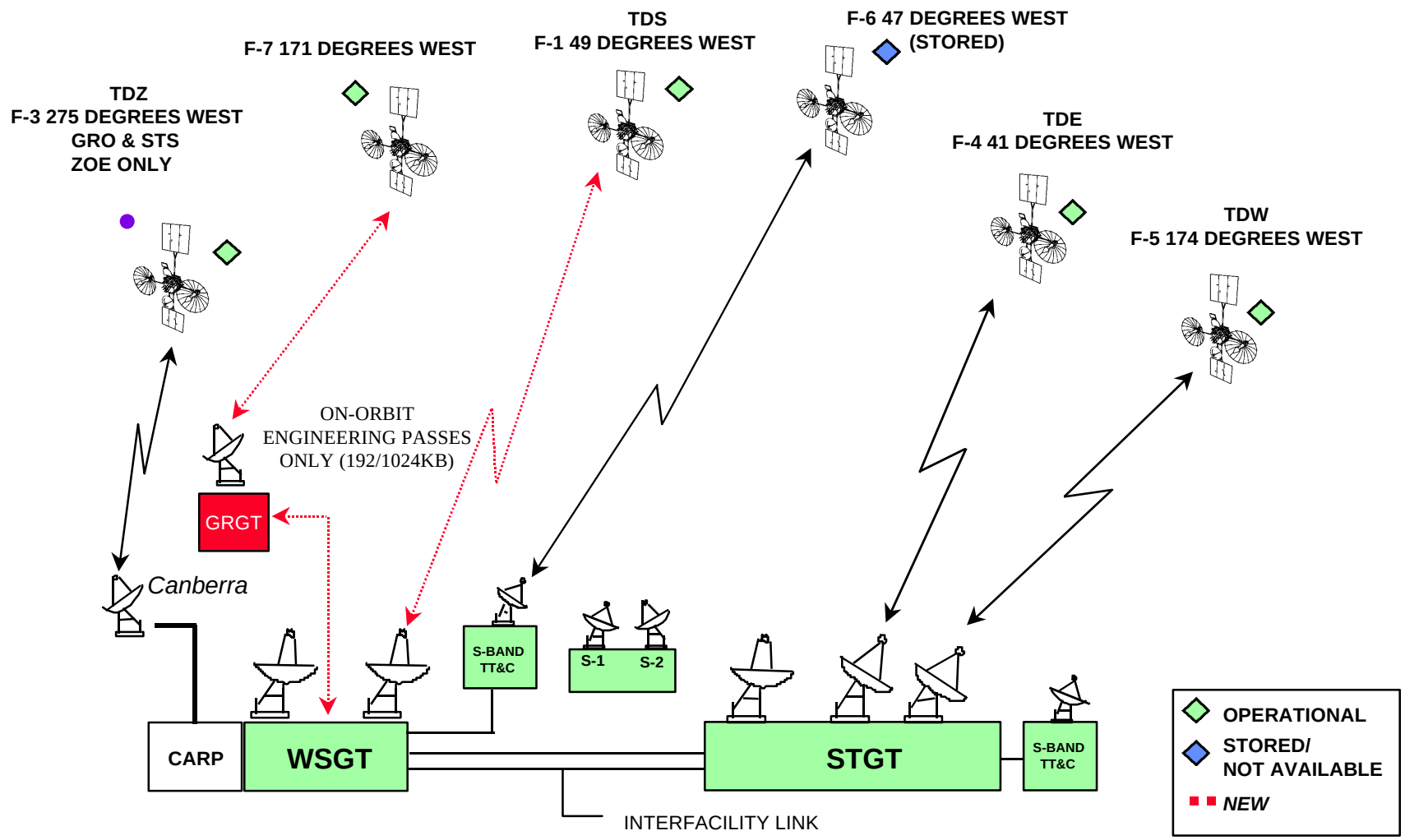

• AVAILABLE ON-ORBIT AT INCO DISCRETION

N&MS	STS-91 S/MM-09/SPACEHAB-DM NETWORKS
CODE 450	

JSC - KALININGRAD VOICE CIRCUITS

1. MIR SHUTTLE OPS CH-1
2. A/G MIR CH-2
3. MCC-M/MCC-H GC CH-3
4. LIGHT DIRECTOR MCC-H CH-4
5. FLIGHT DIRECTOR MCC-M CH-5
6. MIR SIM COORD/MIR P/I CH-6
7. MOSCOW CONSULT CH-7
8. HOUSTON CONSULT CH-8
9. A/G STS CH-9
10. ASTRONAUT SURGEON CH-10
11. PAO MOSCOW CH-11
12. SIM AIR-TO-AIR (JIS ONLY) CH-12
13. A/G-1 (MONITOR)
14. MCC-M/MCC-H GSOC BACKUP #1 (MIR SHUTTLE OPS)
15. MCC-M/MCC-H GSOC BACKUP #2 (A/G MIR)

N&MS	STS-91 S/MM-09/SPACEHAB-DM NETWORKS
CODE 450	

JSC - KOROLEV (KALININGRAD) VOICE CIRCUITS

Notes:

1. Prime Route: New Cable Route (TAT-10 Subcable) Runs from MCC-M Moscow to MCC-H Houston. From JSC to MSFC, MSFC to MSFC PSCN, to GSFC where its put on Nascom-2000 circuits.
2. Alternate Route: Satellite Route
3. GSOC Back-up (TAT-8 Subcable)

JSC/GSFC/STATEN ISLAND/MCC-M LOOP:
#1: MIR/STS OPS
#3: MCC-M/MCC-H GC
#8: HOUSTON CONSULT
#9: A/G STS
#11: PAO MOSCOW
#12: SIM AIR TO AIR
#13: A/G-1 (MON TO MOSCOW)

JSC/GSFC/MSFC/STATEN ISLAND/MCC-M LOOP
#2: A/G MIR
#4: FLT DIR MCC-H
#5: FLT DIR MCC-M
#6: MIR SIM COORD/MIR PA
#7: MOSCOW CONSULT
#10: ASTRONAUT SURGEON

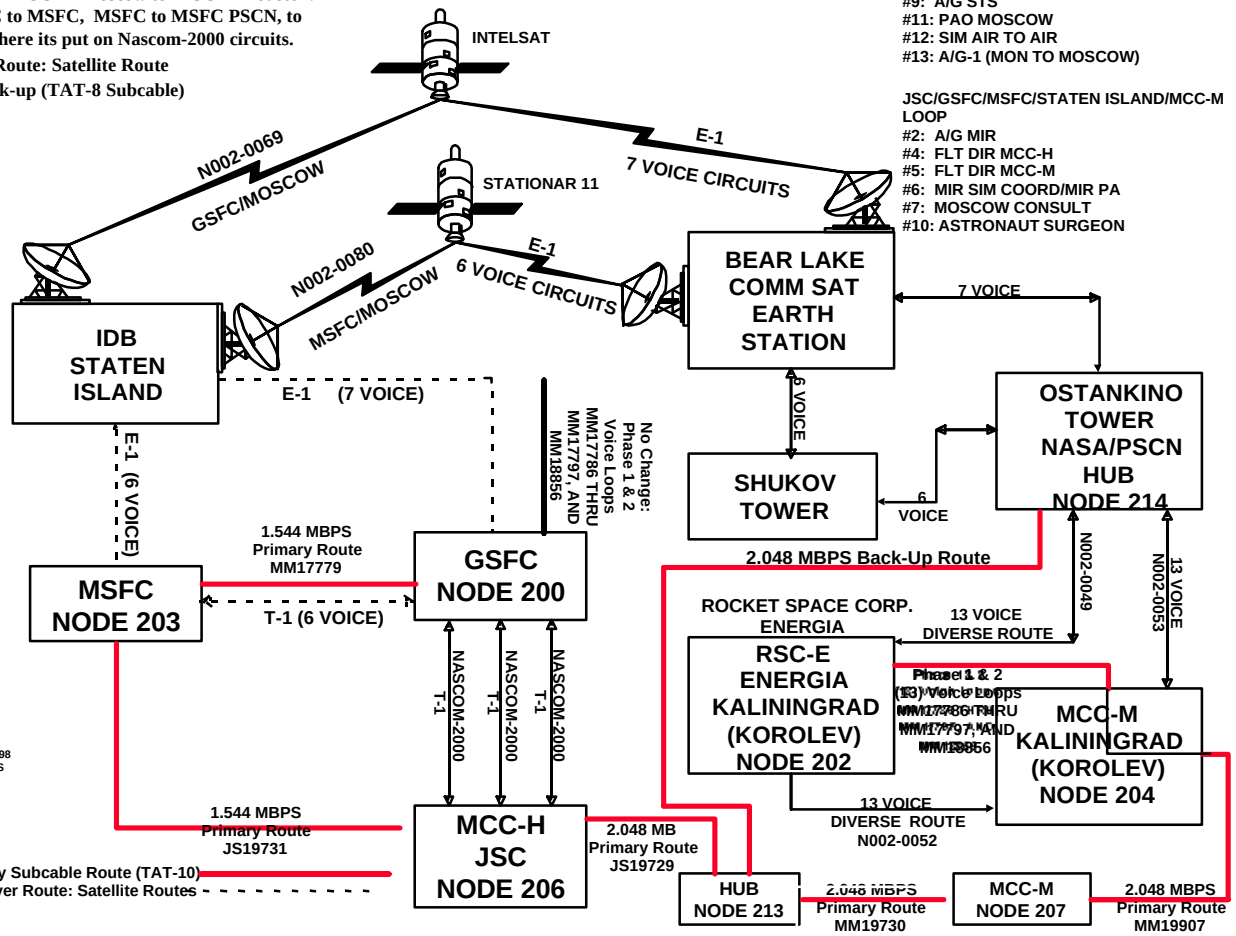

STS-91 ON-ORBIT GUAM TESTING

- IN ORDER TO AFFORD EACH USER AN OPPORTUNITY TO ACCESS THE INTEGRITY OF THE GRGT SYSTEM, THE FOLLOWING GUIDELINE IS REQUESTED (BASED ON MINIMUM SUPPORT REQUIRED FOR A GOOD NAVIGATION SOLUTION):
- MINIMUM OF 20 MINUTES OF DATA/3-4 CONSECUTIVE REVS
  - SUPPORT FROM THE 171°W SATELLITE WILL BE LIMITED TO:
    - 32/72KB S - BAND UPLINK
    - 96/192KB S - BAND DOWNLINK
    - 192KB K - BAND CHANNEL 1
    - 1024KB K - BAND CHANNEL 2 DUMP

NOTE: USER BANDWIDTH LIMITED TO 2.080 MB

N&MS	STS-91 S/MM-09/SPACEHAB-DM NETWORKS
CODE 450	

DATA SUPPORT CONFIGURATION FOR STS-91

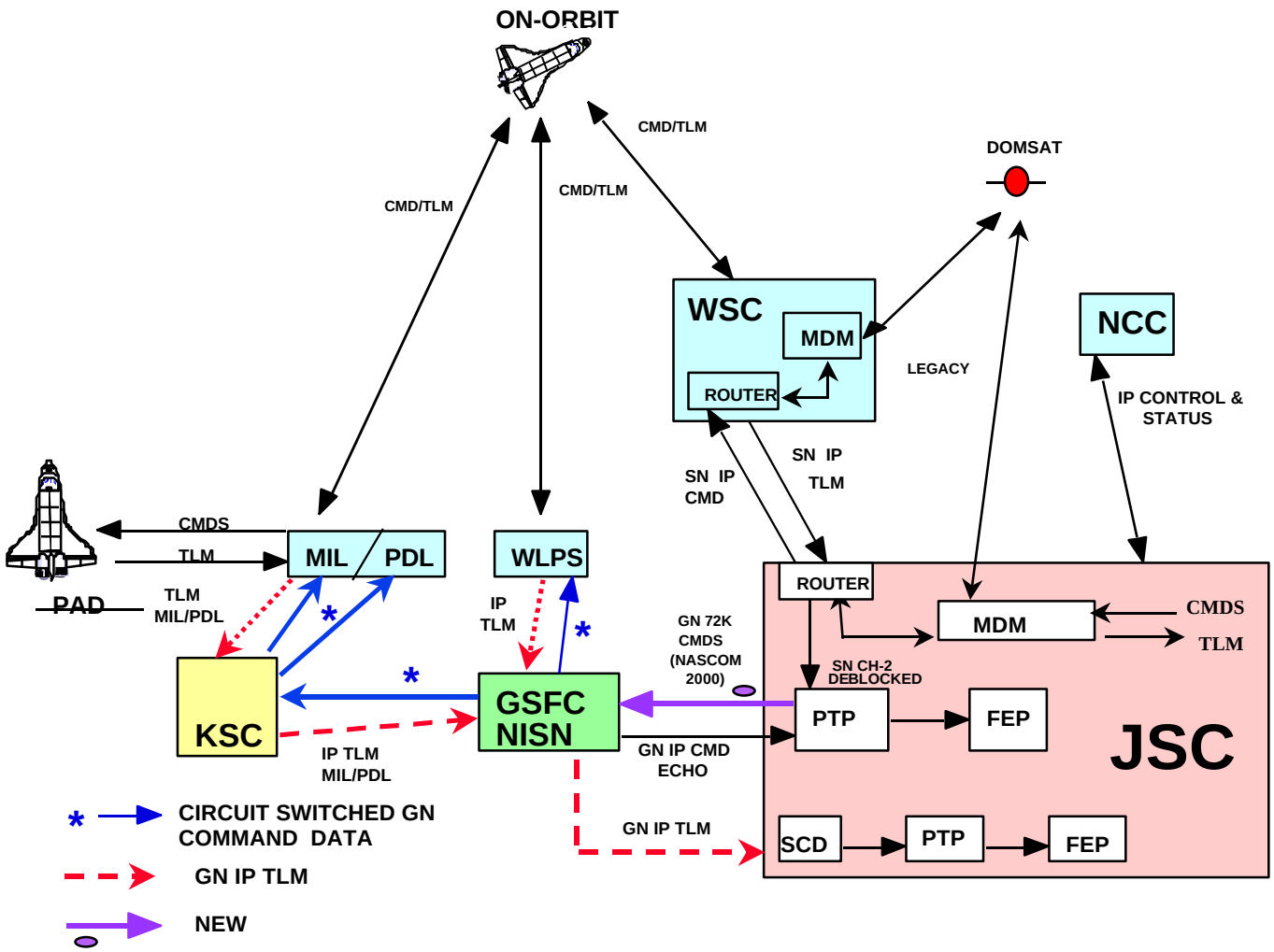

N&MS	STS-91 S/MM-09/SPACEHAB-DM NETWORKS
CODE 450	

ASCENT PROFILE

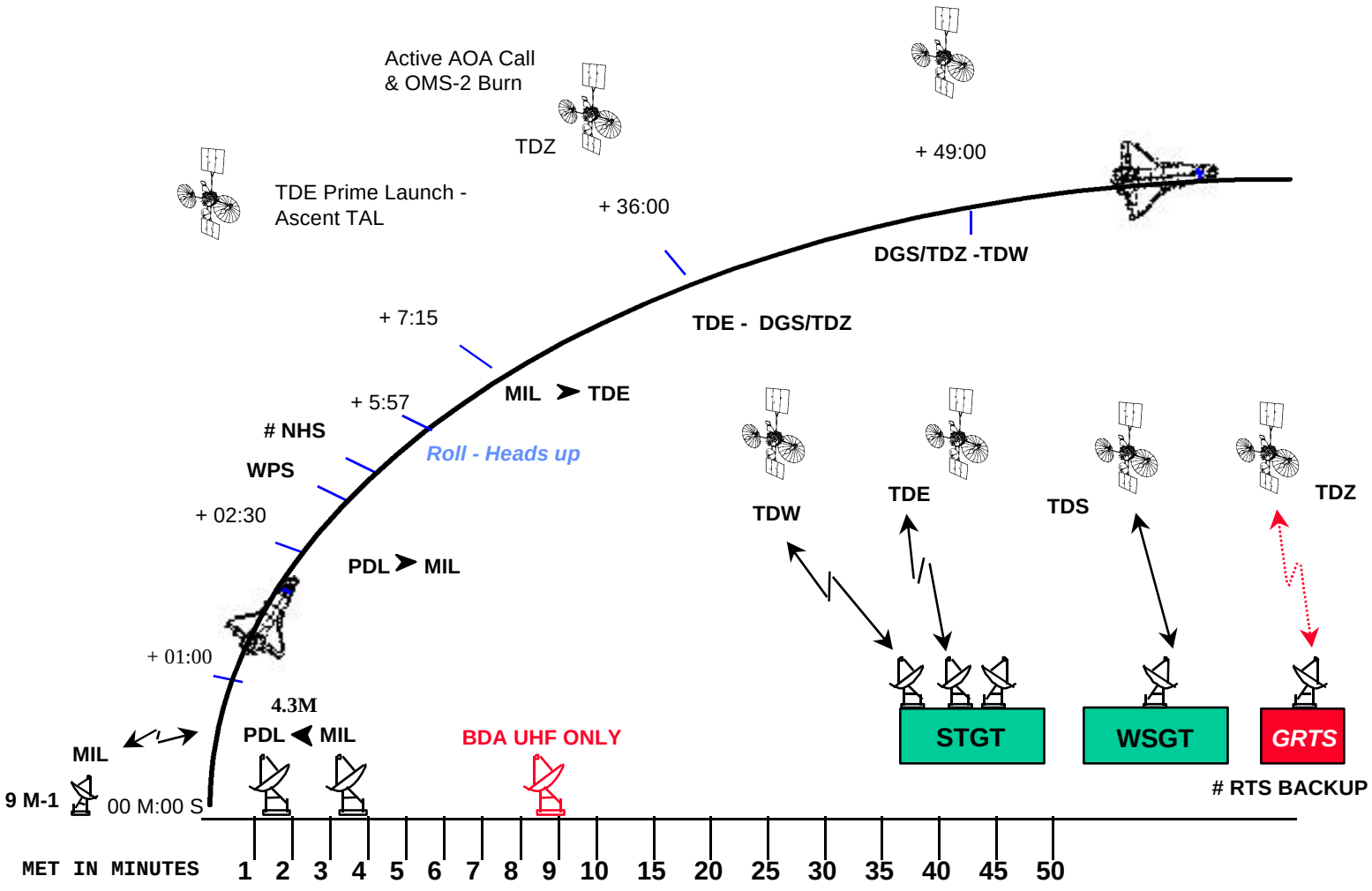

N&MS

CODE 450
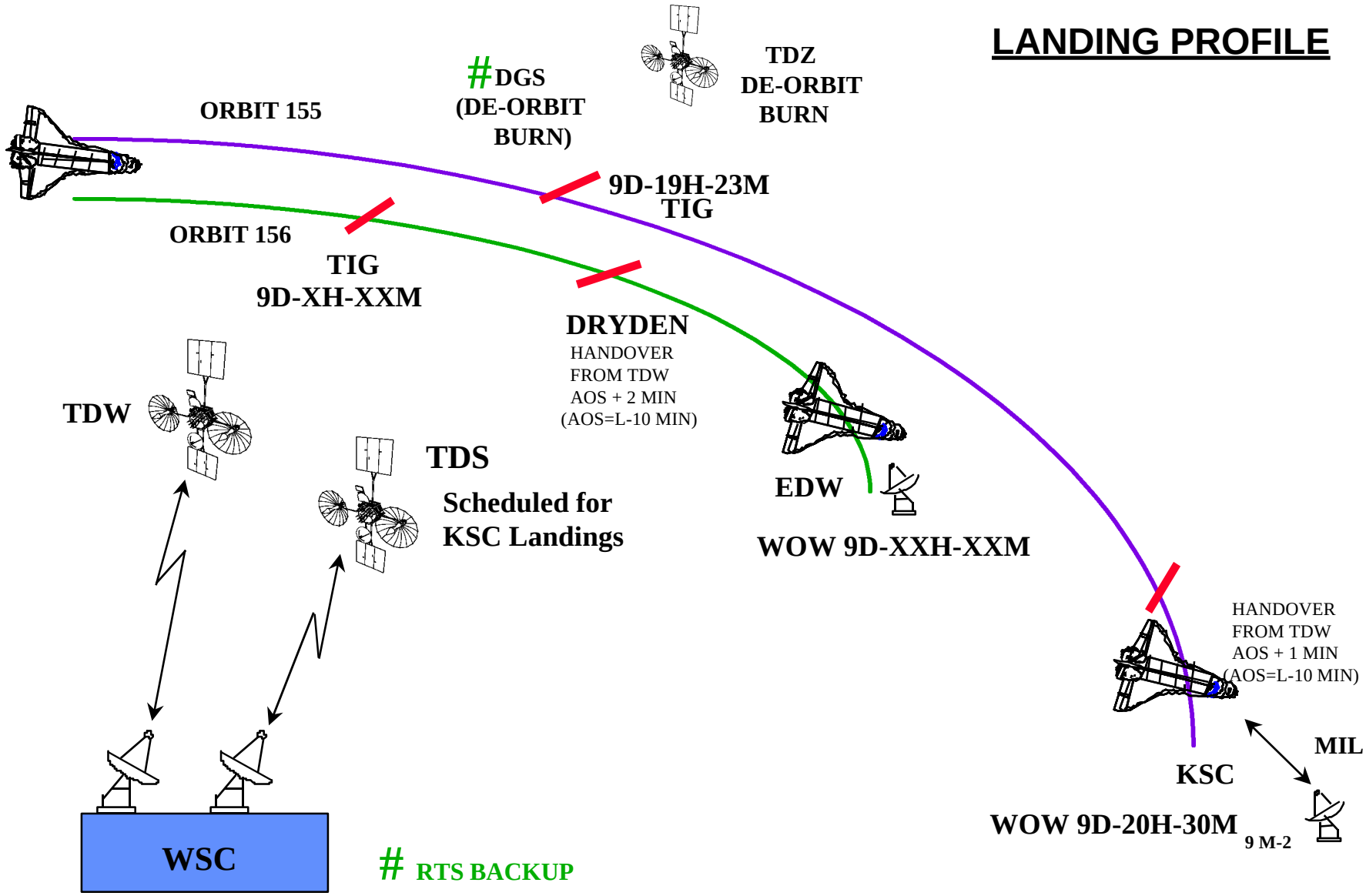
STS-91 S/MM-09/SPACEHAB-DM NETWORKS