Nortel Router Replacement Project (NRRP)

Detailed Design

Version 1.2, March 28, 2011

Goddard Space Flight Center

NRRP Detailed Design – Table of Contents

	Slides
Section 1. Overview	
- Introduction	5
- Purpose	6
- Development, Integration, and Test Plans and Procedures	7
- Acceptance Criteria for the NRRP Detailed Design	8
- Logistics	9
Section 2. NRRP Design Reviews	
- NRRP Design Reviews Conducted to Date	11
Section 3. Design Drivers and Requirements	
- Primary Design Drivers & Opportunities	13
- Operational Limits and Constraints	14
- Applicable Standards	15
- Requirements Summary	16
- Performance Standards	17
- Network Architecture Requirements	18 – 20
- Network Device Requirements	21 – 25
- Security Requirements	26
- Product Build-to Specifications for Hardware	27
- Site-Specific Considerations	28

Goddard Space Flight Center

NRRP Detailed Design – Table of Contents (cont.)

	Slides
Section 4. Detailed Design	
- Project Functional Scope	30
- Logical Topology	31
- High-level Architecture	32
- GSFC Detailed Design	33 – 37
- Tail Site Connectivity	38
- Wide-Area Network (WAN) SMM Detail	39
- Detailed Design by Site (Capitol College, JSC, KSC, MSFC, NOAA, SAFB, VAFB, WSC (STGT/WSGT), WFF)	40 – 69
- Device Recommendations	70 – 74
Section 5. Implementation and Transition	
- Implementation and Transition Overview	76
- Implementation and Transition Approach	77 – 84
- NRRP Pilot Program Approach	85
Section 6. Testing	
- Validation of Network Devices	87
- Validation of the Detailed Design for the NRRP Parallel Network	88
- Verification of the NRRP Transition Approach	89
Appendices	
- **Appendix A:** Acronyms and Abbreviations	91 - 92

Section 1. Overview

Goddard Space Flight Center

Introduction

- The *Nortel Router Replacement Project (NRRP) Design Document* is the culmination of design, testing and review activities defined for the NRRP project by:
  - NPR 7120.7
  - The *Project Management Plan (PMP) for the NRRP*
  - The *NRRP Requirements Document*
  - The results of the *Equipment Assessment and Recommendation for the NRRP*
  - The *Internal Design Review (IDR) for the NRRP (09/28/09)*
  - *Key Decision Point (KDP) - C (11/18/10)*

Goddard Space Flight Center

Purpose

- The *NRRP Design Document* sets forth the approach that the project will utilize to:
  - Demonstrate that the NRRP design meets the strategic goals NASA/Agency and NISN Project objectives as defined in the *Project Management Plan (PMP) for the NRRP*
  - Deliver a detailed network design with configuration specifications for procurement, implementation, and transition activities
  - Demonstrate that the NRRP design meets detailed requirements as defined in the *NRRP Requirements Document*
  - Demonstrate that the NRRP design utilizes industry standard and best practices to leverage of use of COTS systems in order to eliminate system and subsystem development

Goddard Space Flight Center

Development, Integration, and Test Plans and Procedures

- The *Project Management Plan (PMP) for the NRRP* sets forth the oversight for design, development, integration and test activities required for the NRRP
- The *NRRP Requirements Document* is inclusive of all technical requirements for the NRRP
- The *Equipment Assessment and Recommendation for the NRRP* is inclusive of the test criteria, results and recommendation for the core devices to be procured to support implementation of the NRRP
- The *Internal Design Review (IDR) for the NRRP (09/28/09)* established the proposed, baseline configuration for design, implementation, and transition phases of the NRRP
- The *NRRP Detailed Design (draft)* sets forth the critical design and approach to be used for the Implementation Phase of the NRRP
- The *NRRP Implementation Plan (draft approach/outline)* establishes the baseline, programmatic and technical approach to be used for the Implementation Phase of the NRRP

Goddard Space Flight Center

Acceptance Criteria for the NRRP Detailed Design

Acceptance Criteria	Criteria Met
Successful completion of Internal Design Review (IDR), Network Engineering Review Board (NERD), and NISN CCB peer review	√
The NISN Mission Routed Data Service Owners have verified that the NRRP detailed design meets all applicable, technical, Level 2 (network architecture) and all Level 3 (network devices) requirements stated in the *NRRP Requirements Document* as validated through an assessment of the *NRRP – Detailed Design* drawings and the *Equipment Assessment and Recommendation for the NRRP* results	√
The NRRP Project Manager submits that the NRRP detailed design meets all applicable, technical, Level 1 (NISN Services Document (NSD)) requirements stated in the *NRRP Requirements Document* as a result of meeting all applicable, technical, Level 2 and 3 requirements	√

Goddard Space Flight Center

Logistics

The NRRP will utilize in-place, remedial maintenance procedures for the distribution of equipment , parts and materials needed to support this project

- High-level overview of the project's logistical requirements (Ref. NRRP PMP, Sec. 1.5):

Element	Responsible Party	Activity or Action
Spares provisioning	NISN Mission Operations, Vendor	Ensure adequate spares are available to support standard Service Level Agreements (SLAs)
Shipping and handling of equipment	Procurement Team, NISN Mission Operations, NISN Mission Engineering and Project Implementation Lead	Ensure that the shipping and handling of all network based components is managed in conjunction with existing policies and procedures

- Equipment Receipt and Distribution (Ref. NRRP Requirements Doc., Sec. 5.7.5):
  - All required hardware shall be shipped to a pre-determined location at GSFC
  - Unless otherwise noted, all equipment shall be configured and staged for distribution at GSFC
  - Wide Area Network (WAN) hardware (and other associated equipment) will be distributed from GSFC to all affected sites through the Goddard Gateway
  - Host Center Support personnel will be tasked to receive all equipment shipped to their site

Section 2. NRRP Design Reviews

Goddard Space Flight Center

NRRP Design Reviews Conducted to Date

- Status of NRRP formal design reviews conducted to date:

Review	Review Date	Decision/Date	Decision Making Review Board or Group
Internal Design Review (IDR)	09/28/09	Approved / 09/28/09	Project Team; GSFC, Code 760 Change Control Board (CCB);
System Requirement Review (SRR) / Preliminary Design Review (PDR)	08/04/10	Approved / 08/04/10	Project Team; GSFC, Code 760 Change Control Board (CCB); NRRP Standing Review Board (SRB) / Stakeholders \ customers

Section 3. Design Drivers & Requirements

Goddard Space Flight Center

Primary Design Drivers & Opportunities

- Primary Design Drivers
  - Replace end-of-life Nortel routers and associated obsolete equipment (e.g., 3Com hubs, FDDI, etc.)
  - Move from outdated routing protocol to the current industry best practice multicast protocol on the affected network segment
  - Support parallel operations during implementation and transition
- Design Opportunities
  - Consolidate Mission Network vendors
  - Simplified design: Hierarchical, modular architecture
    - Common spares, maintenance contracts, training, configuration templates, and management tools
  - Leverage improvements in router technology
    - Quality of Service (QoS)
    - Enhanced management capabilities

Goddard Space Flight Center

Operational Limits and Constraints

- Programmatic
  - Mission Support Schedules, e.g., Shuttle and ELV launches and support, Mission Freeze Periods impact the scheduling of implementation and transition activities
  - Host Center support to assist in implementation and transition activities
- Technical
  - Customer interfaces are existing, pre-defined and not amenable to modification to meet project requirements
  - NRRP must utilize industry best practice, COTS systems for design and implementation to eliminate software development, and leverage current operational processes and procedures

Goddard Space Flight Center

Applicable Standards

- NPR 7120.7 NASA Program and Project Management Processes and Requirements
- NISN-001-001 NISN Services Document (NSD)
- NASA/SP-2007-6105 NASA Systems Engineering Handbook
- NIST 800-53 Recommended Security Controls for Federal Information Systems and Organizations
- NPR 2810.1A Security of Information Technology
- NPD 1600.2D NASA Security Policy
- NPR 2800.1B Managing Information Technology
- IONet Security Policy

Goddard Space Flight Center

Requirements Summary

Requirements Level	Source	No. of Reqs
1	NSD; GSFC Code 760; NPR 7120.7	33
2	Derived from Level 1 Requirements	90
3	Derived from Level 1 and Level 2 Requirements	130

Requirements Total (Programmatic and Technical): 253

Goddard Space Flight Center

Performance Standards

- The Performance Standards for the NRRP Detailed Design are defined in *Section 4.2, Level 1 Requirements based on the NSD* as defined in the *NRRP Requirements Document*

#	*Level 1 Requirements based on the NSD*	Criticality
1	Availability of the WAN service supported by the NISN mission services backbone infrastructure is 99.98% for Real-time Critical customers. This does not apply to tail circuits unless the circuits/services were specifically ordered and supplied with diverse routing end-to-end.	1
2	Restoral time of the WAN service supported by the NISN mission services backbone infrastructure is less than 1 minute for Real-time Critical customers. This does not apply to tail circuits unless the circuits/services were specifically ordered and supplied with diverse routing end-to-end.	1
3	Availability of the WAN service supported by the NISN mission services backbone infrastructure is 99.95% for Mission Critical customers. This does not apply to tail circuits unless the circuits/services were specifically ordered and supplied with diverse routing end-to-end.	1
4	Restoral time of the WAN service supported by the NISN mission services backbone infrastructure is less than 2 hours for Mission Critical customers. These restoral times represent the time to restore service to the user and assume immediate access to the user's facility to repair/replace equipment if necessary.	1
5	Coverage Period is 24x7x365	1
6	Acceptable Packet Loss does not exceed .001%	1
7	Round Trip Time does not exceed 120ms for data flow between domestic WAN nodes controlled and operated by NISN.	1
8	Replacement network is capable of supporting existing customer data services including IP multicast.	1
9	Replacement network complies with applicable Federal, Agency, and IONet security policies.	1
10	Replacement network must support seamless transition of customers with the ability to fail back to ensure successful operations.	1
11	Replacement network aligns with NISN architecture strategy and conventions.	1

Goddard Space Flight Center

Network Architecture Requirements

- The Network Architecture Requirements for the NRRP Detailed Design are defined in *Section 4.3, Level 2 Requirements – Network Architecture* as defined in the *NRRP Requirements Document*

#	*Level 2 Requirements – Network Architecture*	Criticality
1	Dial-up out-of band access provisioned to all remote (non-GSFC) routers and switches	1
2	Probe visibility to all Ethernet ports supported (SPAN or tap)	2
3	Support the potential future incorporation of the new non-multicast portion of Closed IONet onto the new core routers	3
4	GCC-managed multicast test devices deployed at each major site	1
5	New infrastructure IP address range(s) is distinct from user address ranges	3
6	New architecture s supports connectivity to the existing carrier Wide Area Network	1
7	IP multicast addressing is compliant with RFC 3171	3
8	OSPF domains of the legacy and new core networks are separate from one another	2
9	Existing level of user redundancy and diversity on the new network are retained.	1
10	New architecture supports the overall IONet migration to GSFC B14/B32 redundancy (vs. legacy B3/B14)	2
11	New architecture supports OMB IPv6 requirements	1
12	New architecture supports existing IONet classless unicast routing protocols	1
13	Network devices support comprehensive Ethernet capabilities.	2

Goddard Space Flight Center

Network Architecture Requirements (cont.)

#	*Level 2 Requirements – Security*	Criticality
1	New network complies with the IONet Security policy	1
2	New network complies with NPR 2810.1A	1

#	*Level 2 Requirements – Transition*	Criticality
1	Replacement network supports parallel operation and incremental transition of service from the legacy network	1
2	Transition environment supports customer ability to test data flows under parallel operations prior to "accepting" transition [n/a to single-homed tail sites]; supports "back-out" if necessary	1
3	Multicast flows available on either network, as needed	1
4	Duplicate multicast flows within the MOSPF or new networks must be avoided	1
5	User device IP address, netmask, and gateway configuration not impacted during the transition (IP multicast configuration will likely change)	2
6	Training and documentation provided to Operations staff to effectively monitor and troubleshoot the transition environment and post-transition network	1
7	Respective multicast domains separated by unicast links to provide implementation flexibility and reduce the chance of inadvertent multicast traffic redistribution	2
8	Multicast gateway devices between the MOSPF and new networks deployed in pairs for redundancy	1
9	Multicast gateway devices between the legacy and new core networks geographically diverse.	1
10	MDM redundancy equivalent to current levels supported throughout the transition	1

Goddard Space Flight Center

Network Architecture Requirements (cont.)

#	*Level 2 Requirements – Multicast*	Criticality
1	Multicast protocol does not cause packet mis-ordering or duplication during nominal operation	1
2	Multicast protocol utilizes the most direct path between source(s) and listeners, to optimize WAN usage	3
3	There are no single points of systemic multicast failure	1
4	Multicast sources in a particular group are limited to those specifically desired	3
5	Multicast traffic given priority over unicast traffic using QoS	2
6	The multicast solution must be compatible with IGMP v2	1

#	*Level 2 Requirements – Manageability*	Criticality
1	WAN link visibility includes bandwidth by DSCP marking	2
2	SLA monitoring capability includes statistical latency, packet loss, and jitter (e.g., IP SLA/RPM support)	2
3	Collection and display of flow-based traffic data supported (e.g., Netflow / J-Flow / IPFIX)	2
4	Historical performance data for trending purposes and capacity planning supported, for example bandwidth usage by project, IP, or flow	2
5	Ability to quickly detect when a link is being overwhelmed and identify major bandwidth flows supported	2
6	Compatibility with ng-NMS core applications supported	2
7	Ability to detect configuration changes provided	1
8	Ability to determine who made what configuration changes supported	1
9	Ability to automatically_detect network outages supported	1
10	Devices support robust management capabilities	**1**

Goddard Space Flight Center

Network Device Requirements

- The Network Device Requirements for the NRRP Detailed Design are defined in *Section 4.4, Level 3 Requirements – Network Devices* as defined in the *NRRP Requirements Document*

#	*Level 3 Requirements – Network Devices*	Criticality	Net Layer – Access	Net Layer – Distribution	Net Layer – Core
1	Network device supports IP multicast forwarding without mis-ordered, duplicate, or missing packets during normal operations (e.g., multicast flows stopping or starting, IGMP joins and leaves)	1	√	√	√
2	Network device is capable of transporting IPv6 (per OMB mandate; may be applicable to future re-use)	1	√	√	√
3	Network device is capable of supporting OSPF v3 (for potential IPv6 support; may be applicable to future re-use)	3	√	√	√
4	Network device is capable of supporting RIPng (for potential IPv6 support; may be applicable to future re-use)	3	√	√	
5	Network device supports OSPF	1	√	√	√
6	Network device supports RIPv2	1	√	√	
7	Network device supports BGP	1		√	√
8	Network device supports auto-negotiation and hard-coding of all Ethernet speed/duplex	1	√	√	√
9	Network device supports stateless traffic filtering	1	√	√	√
10	Network device supports ingress policing	2	√	√	√
11	Network device supports limiting the number of source MAC addresses on a port	1	√		
12	Network device supports specification of source MAC addresses permitted on a port	1	√		
13	Network device supports automatic recovery of ports disabled by too many MAC addresses or incorrect MAC addresses	2	√		

Goddard Space Flight Center

Network Device Requirements (cont.)

#	*Level 3 Requirements – Network Devices*	Criticality	Net Layer – Access	Net Layer – Distribution	Net Layer – Core
14	Network device supports a minimum of 4 egress queues per interface	1	√	√	√
15	Network device supports 8 egress queues per interface	3	√	√	√
16	Network device supports egress queues selectable by DSCP markings	1	√	√	√
17	Network device supports preferential forwarding of specific traffic classes over others	1	√	√	√
18	Network device supports jumbo frames at both Layer 2 and Layer 3 (1532 bytes minimum; 9K desirable)	2	√	√	√
19	Network device supports Ethernet port mirroring	1	√	√	√
20	Network device supports ingress DSCP classification	1	√		
21	Network devices supports the generation of synthetic traffic for performance monitoring, e.g., IP SLA or Real-time Performance Monitor (RPM)	2	√		
22	Network device supports flow-based traffic monitoring (IPFIX preferred)	2	√	√	√
23	Network device supports RS-530 serial interfaces	1		√	
24	Network device is capable of supporting hierarchical QoS on Ethernet interfaces. Specifically, the ability to implement QoS policy at an aggregate rate less than link speed (for NTR WAN ingress). Acceptable to only be supported on a subset of Ethernet interfaces	2	√	√	√
25	Network device supports redundant, hot-swappable power supplies (preferably internal to the chassis)	1		√	√
26	Network device supports SNMP retrieval of PIM information (e.g., RFC 5060 - PIM MIB)	2	√	√	√
27	Network device supports SNMP retrieval of IGMP v2 translations, if applicable.	3	√		
28	Network device supports the Multicast Group Membership Discovery MIB (RFC 5519)	3	√	√	√
29	Network device supports SSHv2 (client and server)	1	√	√	√

Goddard Space Flight Center

Network Device Requirements (cont.)

#	*Level 3 Requirements – Network Devices*	Criticality	Net Layer – Access	Net Layer – Distribution	Net Layer – Core
30	Network device permits SSHv2 access to be limited to at least two arbitrary CIDR sources	1	√	√	√
31	Network device supports SFTP and/or SCP	1	√	√	√
32	Network device supports RADIUS for administrative authentication/login	1	√	√	√
33	Network device supports at least two RADIUS servers for administrative/ management authentication, authorization, and accounting	1	√	√	√
34	Network device supports or can be configured to support RADIUS authentication and authorization on port 1812, and accounting on port 1813	1	√	√	√
35	Network device supports automatic failover between RADIUS servers	1	√	√	√
36	Network device supports automatic failback for RADIUS servers. That is, if the prime server is unavailable and the system fails to a backup RADIUS server, should the prime server become available again, the system should then switch to using the prime server	1	√	√	√
37	Network device supports a local fallback password in case of network failure to access the RADIUS server, or in case the RADIUS server is down	1	√	√	√
38	Network device supports either standard RADIUS attributes or supply a dictionary file with VSAs (vendor-specific attributes)	1	√	√	√
39	Network device supports multiple levels of authorization via RADIUS, at minimum to include a read-only level (i.e., operator access) and a read-write level (i.e., engineer access)	1	√	√	√
40	Network device provides a mechanism to create a custom authorization level with a user-specified mix of read-only and read-write access, and/or provide a mechanism to allow select read-write access to the read-only user group	2	√	√	√
41	Network device supports SNMPv1 and v2c for GET (v1+), GETNEXT (v1+), GETBULKNEXT(v2c+), SET (v1+), TRAPs (v1+) and INFORMs (v2c+)	1	√	√	√
42	Network device supports SNMPv3	2	√	√	√
43	Network device supports built-in access controls allowing SNMP to be limited to at least two arbitrary CIDR sources	1	√	√	√

Goddard Space Flight Center

Network Device Requirements (cont.)

#	*Level 3 Requirements – Network Devices*	Criticality	Net Layer – Access	Net Layer – Distribution	Net Layer – Core
44	In SNMPv1/v2 mode, network device allows separate GET and SET communities (if SET is supported)	1	√	√	√
45	In SNMPv1/v2 mode, network device allows any default communities to be disabled	1	√	√	√
46	Network device supports at least two SNMP trap/inform destinations/sinks	1	√	√	√
47	Network device supports all applicable MIB-2 OIDs	1	√	√	√
48	Network device provides any statistic accessible via GUI or CLI to also be accessible via SNMP MIB retrieval	3	√	√	√
49	Network device defines all supported private OIDs in standard MIB files	2	√	√	√
50	Network device supports NTPv3 or NTPv4	1	√	√	√
51	Network device supports at least two NTPv3/NTPv4 servers	1	√	√	√
52	Network device support true NTP, not just SNTP	1	√	√	√
53	Network device supports having the time zone set to UTC or GMT	1	√	√	√
54	Network device supports syslog.	1	√	√	√
55	Network device allows at least two syslog destinations	1	√	√	√
56	Network device supports disabling unused protocols	2	√	√	√
57	If management via telnet, FTP, TFTP, HTTP, and any other protocols is supported, there is a way to turn them off on network devices (protocol servers, not necessarily clients)	1	√	√	√
58	Network device supports all monitoring via command-line interface	1	√	√	√
59	Network device supports all monitoring via an HTTPS standard web-based interface	3	√	√	√
60	All configurable elements on network device are modifiable via command-line interface	s	√	√	√

Goddard Space Flight Center

Network Device Requirements (cont.)

#	*Level 3 Requirements – Network Devices*	Criticality	Net Layer – Access	Net Layer – Distribution	Net Layer – Core
61	All configurable elements are modifiable via an HTTPS standard web interface on network devices	3	√	√	√
62	A proprietary element manager may also optionally be present. However, use of the element manager is wholly optional	1	√	√	√
63	Network device supports all critical configurations via an RS-232 console/craft port and Command Line Interface (CLI). Vendor shall provide serial port pin-outs if non-standard	1	√	√	√
64	RS-232 serial console is sufficient to support complete remote recovery of the network device should its configuration be corrupted while at a remote site	1	√	√	√
65	Network device supports password recovery	1	√	√	√
66	Network devices permits local reset to factory defaults should the device configuration be corrupted or its fallback password lost	2	√	√	√
67	Network device supports remote upgrade of firmware/software over the network, from a different subnet	1	√	√	√
68	System supports perpetual licenses	1	√	√	√
69	Network device supports password lengths of at least 8 characters of mixed case and numbers	1	√	√	√
70	Network device SNMP community strings are capable of meeting password requirements	1	√	√	√
71	Network device is capable of displaying a NASA General Counsel-approved warning banner prior to login.	1	√	√	√
72	New network supports integration with the IONet Security Intrusion Detection System (IDS)	1	N/A		
73	Infrastructure addresses are suitable for summarization at OSPF area borders, if applicable.	3	N/A		

Goddard Space Flight Center

Security Requirements

- Security Requirements for the NRRP Detailed Design are defined in *Section 5.5.3 of* the *NRRP Requirements Document*
  1. The IONet Security Team must review and provide input into the Project, Technical and System Requirements Document. This may include items such as the placement of new IDS taps, software monitoring, and other security related items.
  2. The proposed design must be compliant with the *IONet Access Policy*.
  3. Security Engineers can provide input to the network design and be available to review the design while it is under development.
  4. The system shall support all security elements, e.g., password length, aging, etc., as specified in NASA Procedural Requirement (NPR) 2810.1a.
  5. The system shall support per-user access control to infrastructure devices (authentication component of Authentication, Authorization & Accounting (AAA))
  6. The design shall enable IDS to be deployed at designated points in the network.
  7. The system shall support secure protocols for viewing and modifying infrastructure devices.

Goddard Space Flight Center

Product Build-to Specifications for Hardware

- The Product Build-to Specifications for Hardware are defined in:
  - *Section IV: Technical and Network Performance Requirements* of the *NRRP Requirements Document (vers. 1.0, 08/06/10)*
  - *Section 2.5 Summary of Assessment Results* of the *Equipment Assessment and Recommendation for the NRRP (vers. 1.3, 10/19/10)*

- Due to the scope of the NRRP, there are no Product Build-to Specifications for software

Goddard Space Flight Center

Site-Specific Considerations

- Programmatic
  - Availability and location of existing rack space
  - AC power availability
- Technical
  - Existing Out-Of-Band (OOB) dial-up capability
  - Number of access switches/routers
  - Sizing of distribution routers

Section 4. Detailed Design

Goddard Space Flight Center

Project Functional Scope

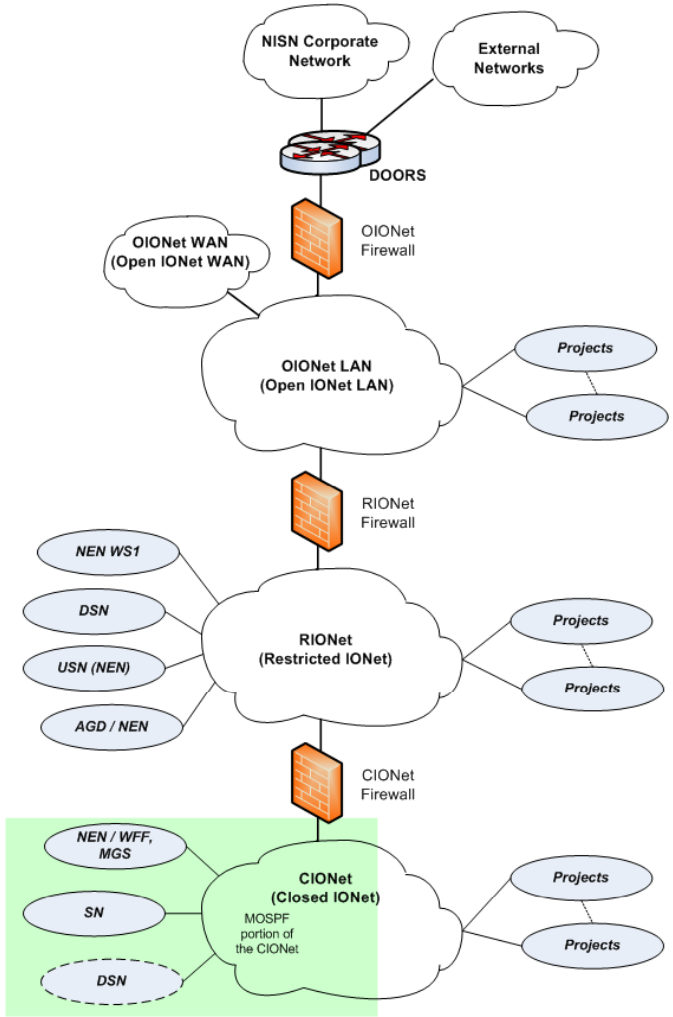

IP multicast implemented in 1997 on the Closed IOnet as part of the Nascom transition to IP infrastructure

Goddard Space Flight Center

Logical Topology

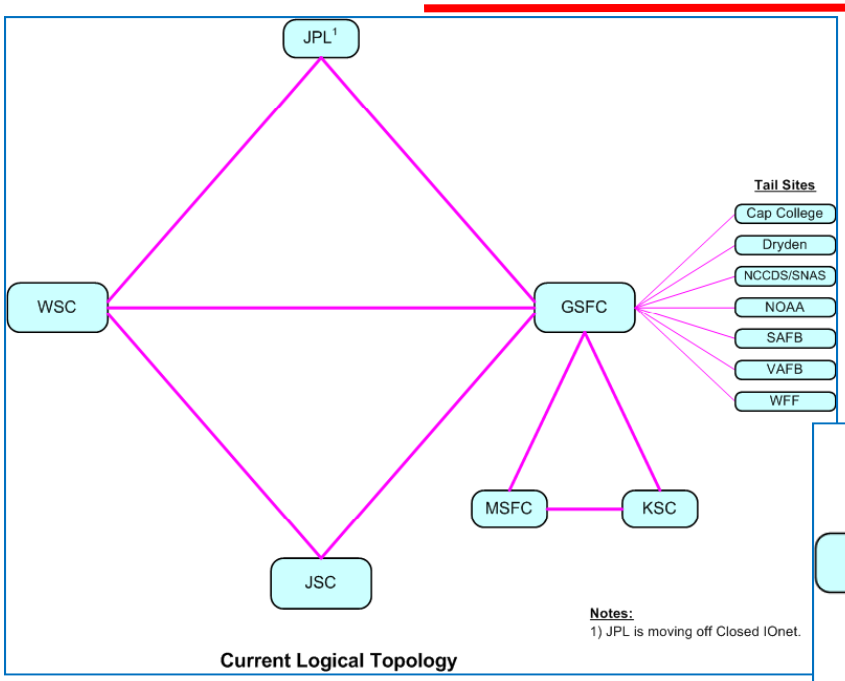

Current Logical Topology

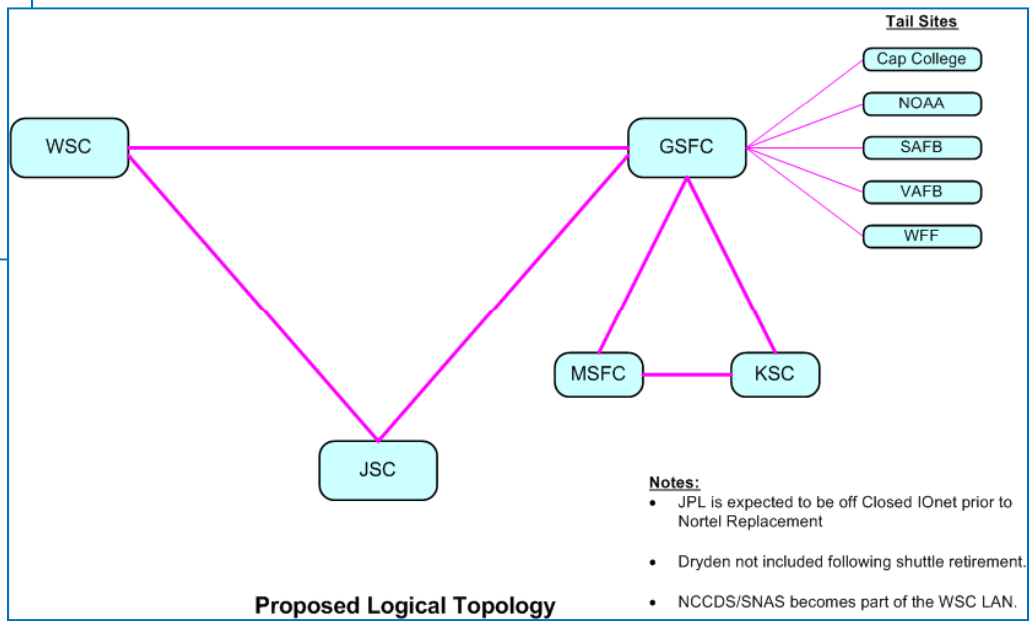

Proposed Logical Topology

Goddard Space Flight Center

High-Level Architecture

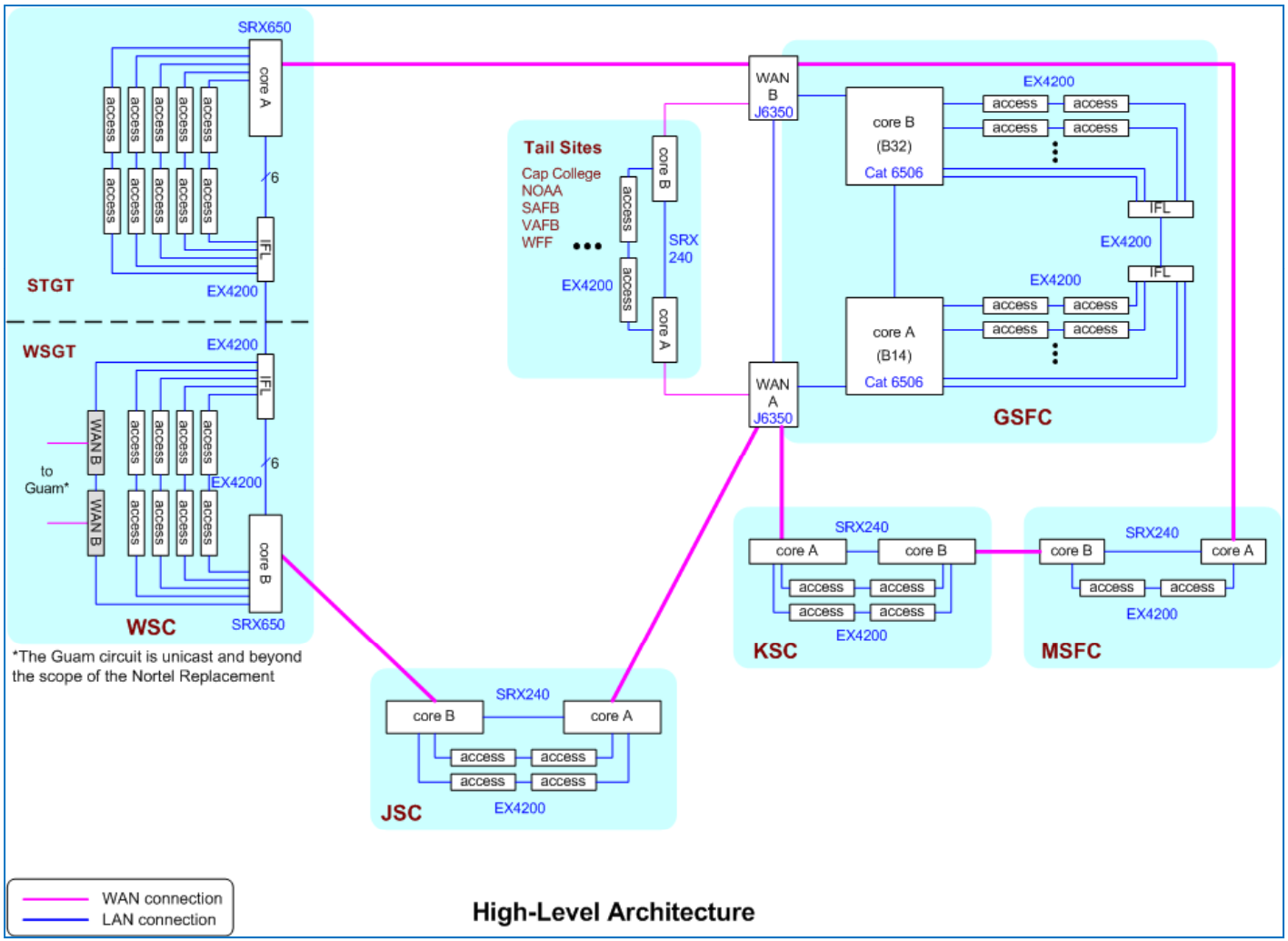

Goddard Space Flight Center

Goddard Space Flight Center (GSFC) Proposed NW Design

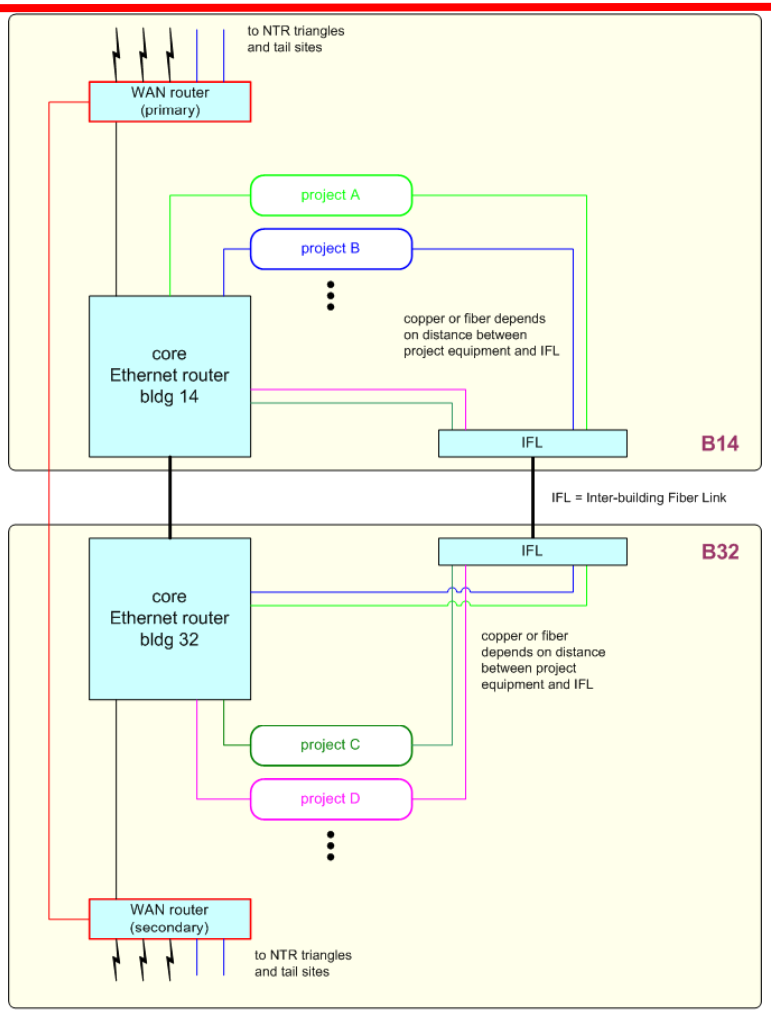

Notes:
1) Each GSFC project connects to the local core router directly and the alternate core router via the IFL.

Goddard Space Flight Center

GSFC

Proposed Logical Architecture (Layer 3)

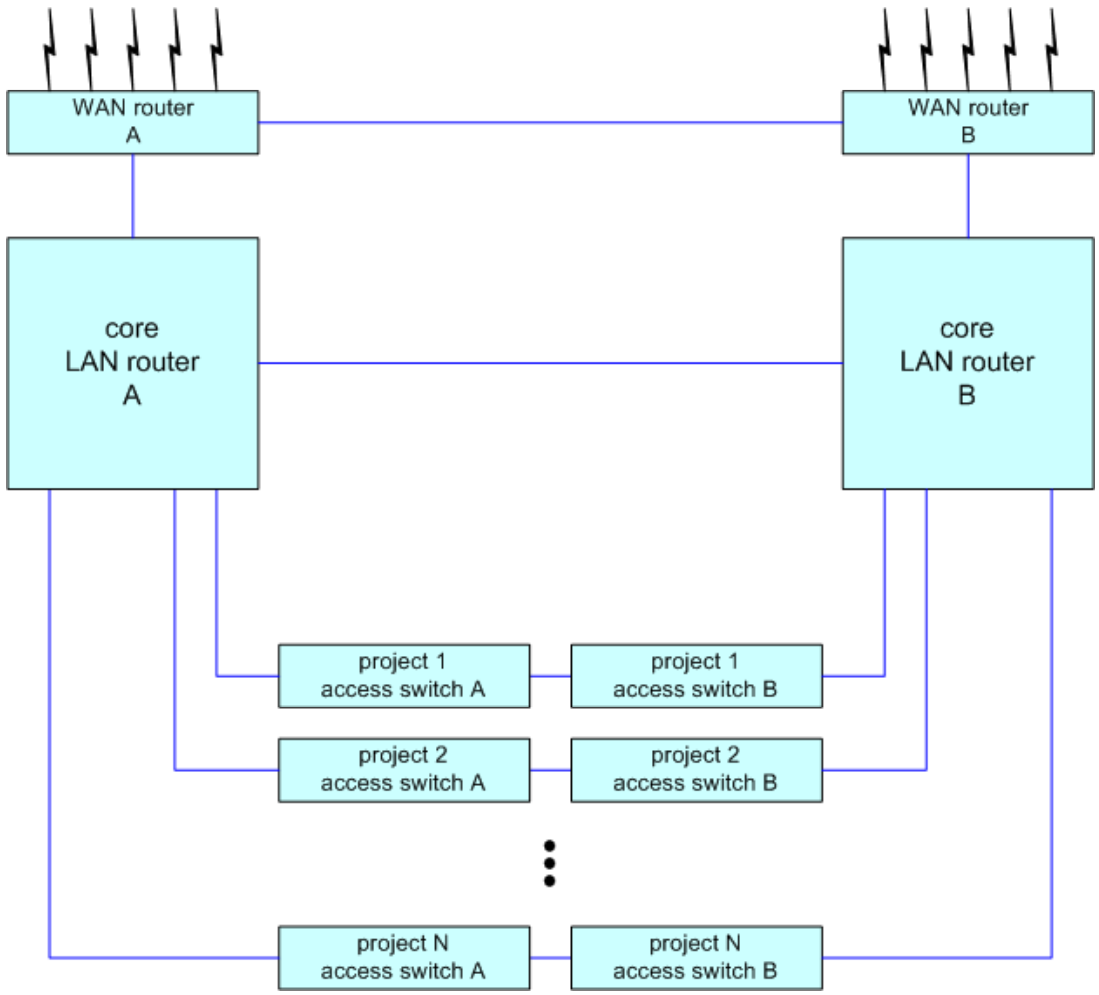

Goddard Space Flight Center

GSFC
Detailed Design

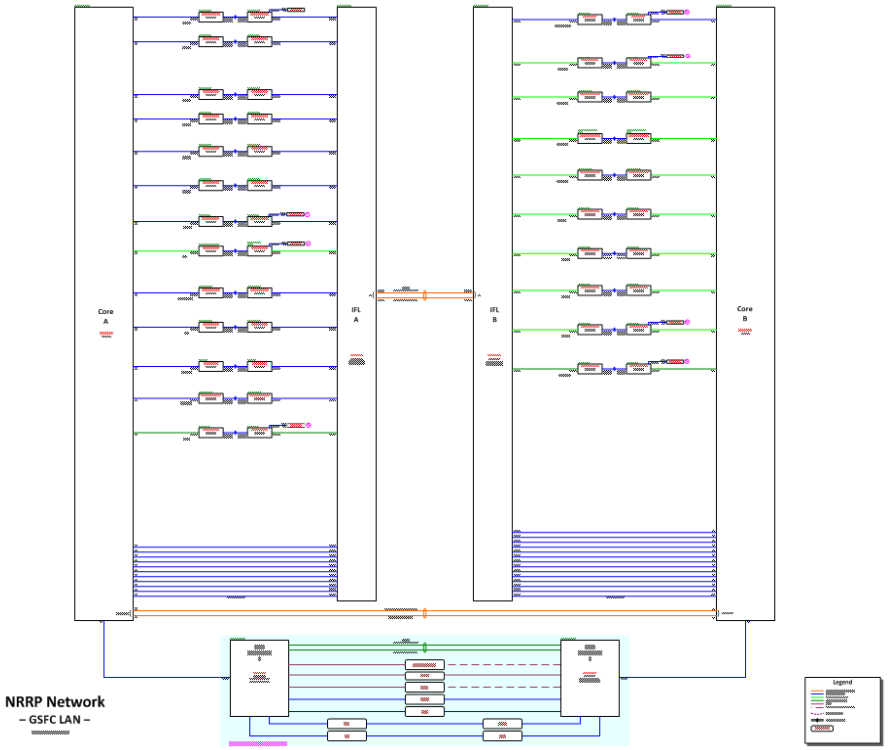

Click on this image to open drawing in larger view

GSFC Detailed Design

Goddard Space Flight Center

GSFC
Core Rack Elevation Drawing

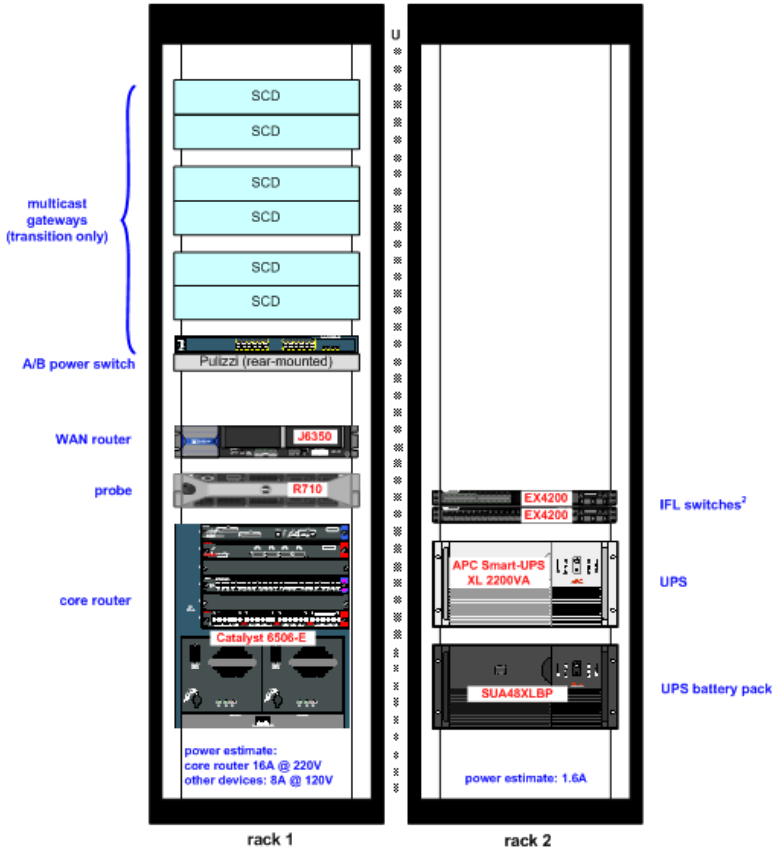

Bldg 14 and Bldg 32[3]

Notes:
1. Drawing represents rack space and power requirements only. Actual configuration to be coordinated with host site.
2. IFL switches to be physically diverse from core router, within data center constraints.
3. Same equipment to be deployed in both buildings.

Updates since CDR:
- Added UPS external battery

Nortel Replacement Equipment
GSFC Core

2011-03-22

Goddard Space Flight Center

GSFC

Power and Cooling Requirements for NRRP Equipment

Building	Amps	Volts	Watts	Cooling requirement
03	3.2	120	384	1309 BTUs/Hr
05	3.1	120	372	1269 BTUs/Hr
13	3.1	120	372	1269 BTUs/Hr
14	41.5	120 – 220*	6580	22438 BTUs/Hr
25	3.1	120	372	1269 BTUs/Hr
32	43	120 – 220*	6760	23052 BTUs/Hr

Note: 1 watt = 3.412141633 BTU/Hr

Notes:
* GSFC Core Devices require 220 volts

Goddard Space Flight Center

Tail Site Connectivity Existing and Proposed

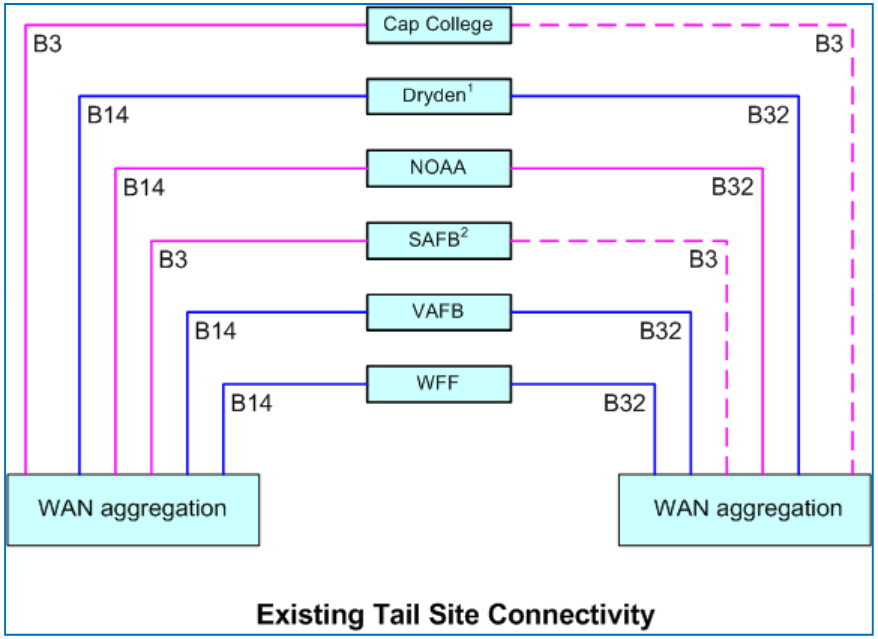

Existing Tail Site Connectivity

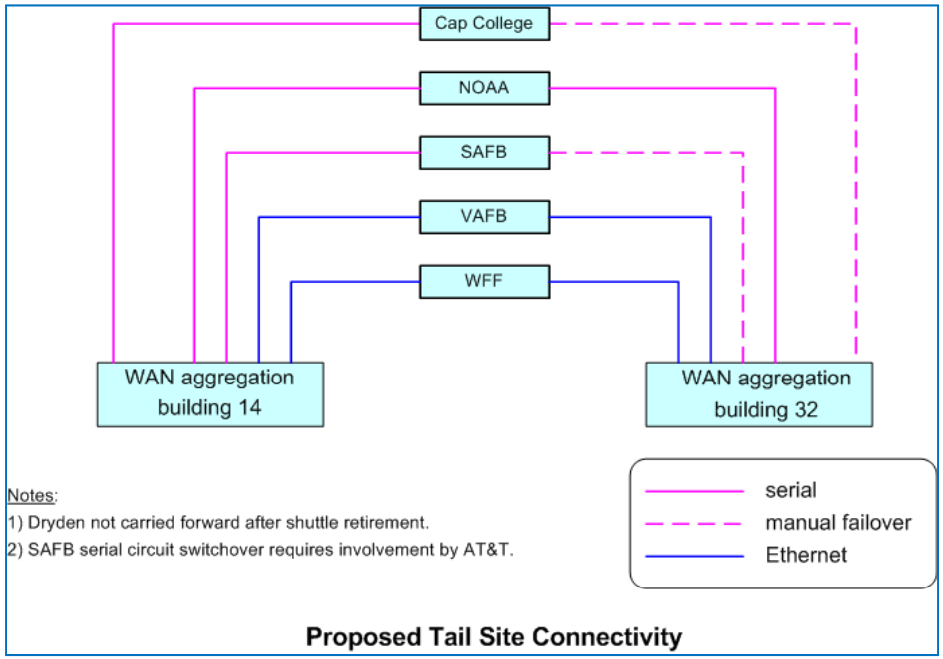

Notes:
1) Dryden not carried forward after shuttle retirement.
2) SAFB serial circuit switchover requires involvement by AT&T.

Proposed Tail Site Connectivity

Goddard Space Flight Center

Wide-Area Network (WAN) NRRP Detail

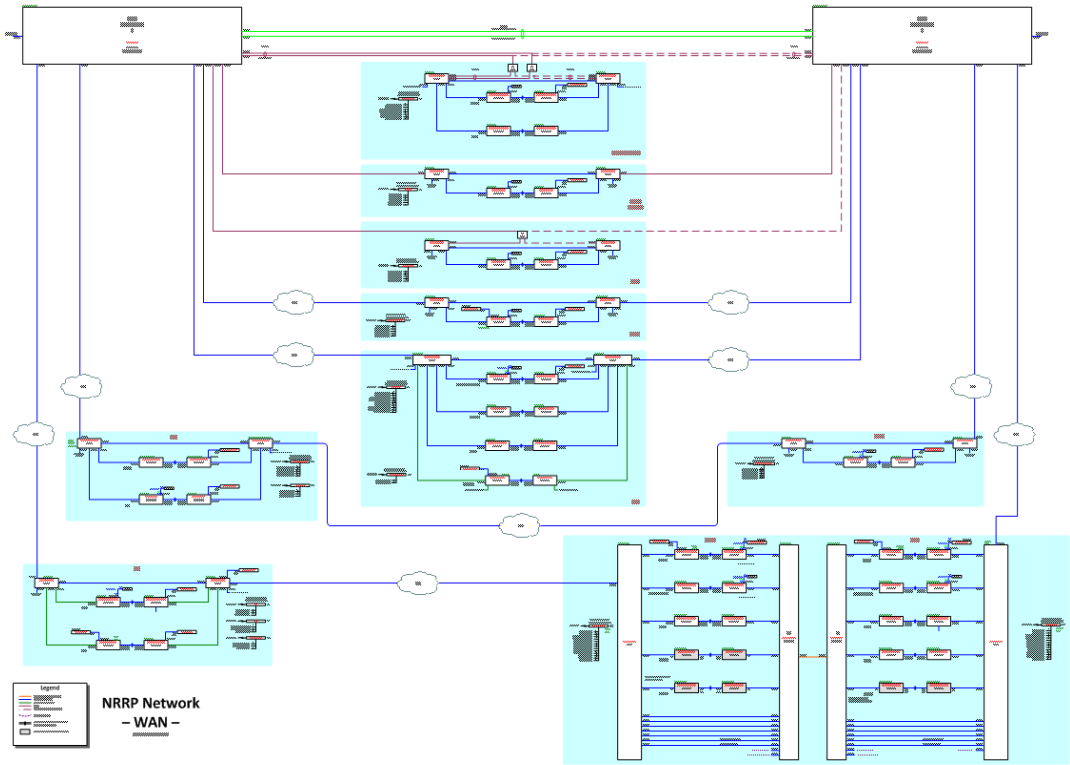

Click on this image to open drawing in larger view

WAN NRRP Detail

Goddard Space Flight Center

Capitol College (Bowie MD)
Existing and Proposed NW Designs

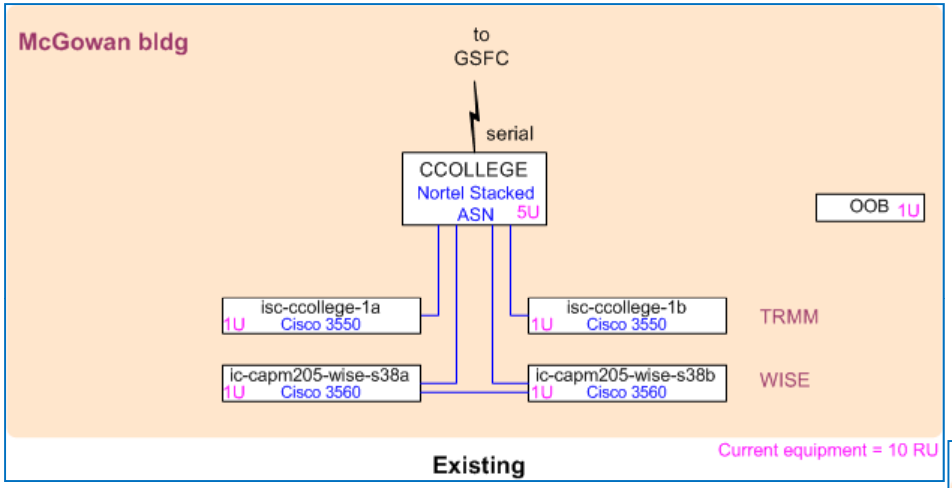

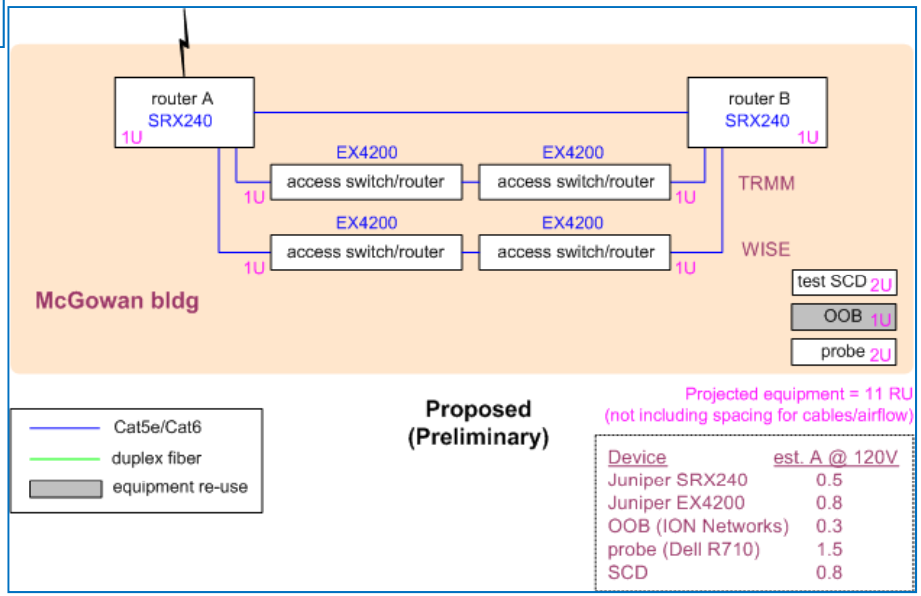

Goddard Space Flight Center

Capitol College
Rack Elevation Drawing*

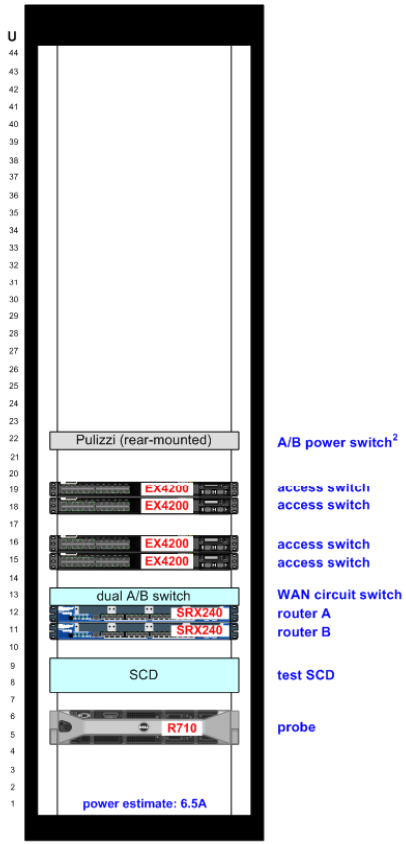

Notes:
1. Drawing represents rack space and power requirements only. Actual configuration to be coordinated with host site.
2. Redundant power sources assumed.

Updates since CDR:
- Added A/B switch
- Removed OOB device from diagram since reusing existing OOB

Nortel Replacement Equipment
Capitol College

2011-03-22

*Drawing represents rack space and power requirements only. Actual configuration/implementation to be coordinated with host site.

Goddard Space Flight Center

Capitol College

Power and Cooling Requirements for NRRP Equipment

Building	Amps	Volts	Watts	Cooling requirement
McGowan	6.5	120	780	2660 BTUs/Hr

Note: 1 watt = 3.412141633 BTU/Hr

Goddard Space Flight Center

Johnson Space Center (JSC)
Existing and Proposed NW Designs

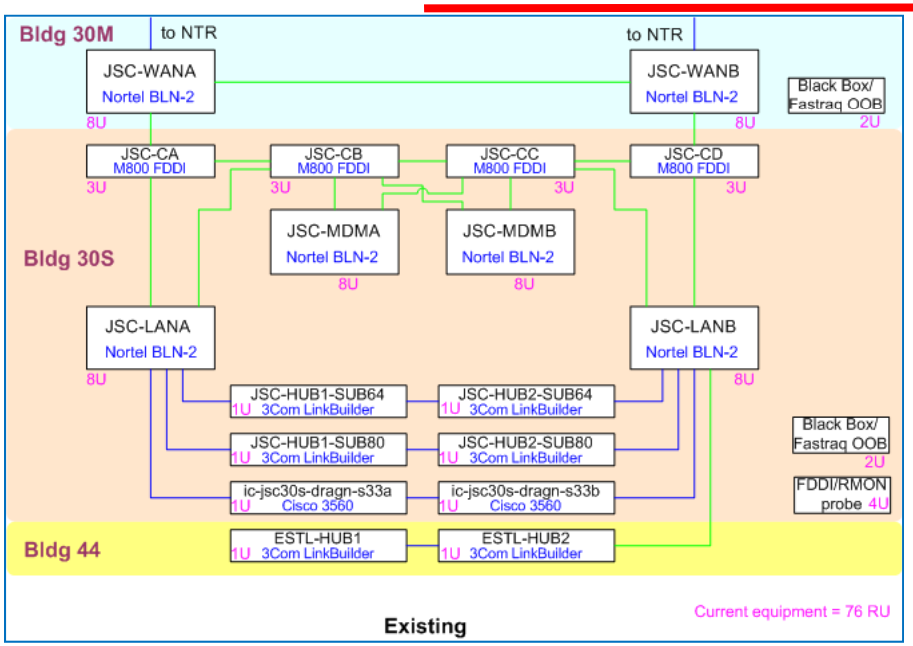

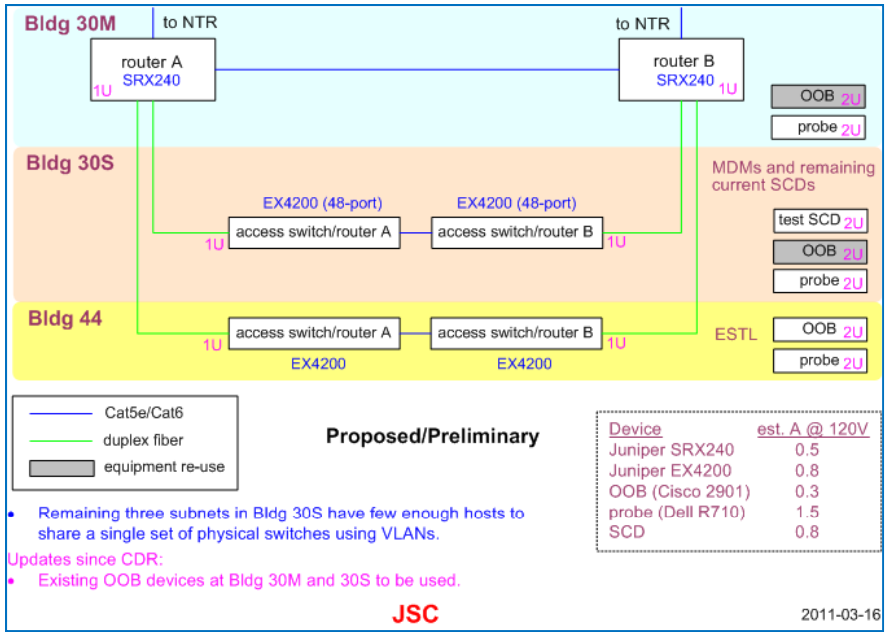

Goddard Space Flight Center

JSC
Rack Elevation Drawing*

Bldg 30M | Bldg 30S | Bldg 44

Notes:
1. Drawing represents rack space and power requirements only. Actual configuration to be coordinated with host site.
2. Redundant power sources assumed.
3. Requires analog phone line.

Updates since CDR:
- Existing OOB devices will be used in Bldgs 30M and 30S

Nortel Replacement equipment
JSC

2011-03-22

*Drawing represents rack space and power requirements only. Actual configuration/implementation to be coordinated with host site.

Goddard Space Flight Center

JSC

Power and Cooling Requirements for NRRP Equipment

Building	Amps	Volts	Watts	Cooling requirement
30M	2.5	120	300	1023 BTUs/Hr
30S	3.3	120	396	1350 BTUs/Hr
44	2.8	120	336	1146 BTUs/Hr

Note: 1 watt = 3.412141633 BTU/Hr

Goddard Space Flight Center

Kennedy Space Center (KSC)
Existing and Proposed NW Designs

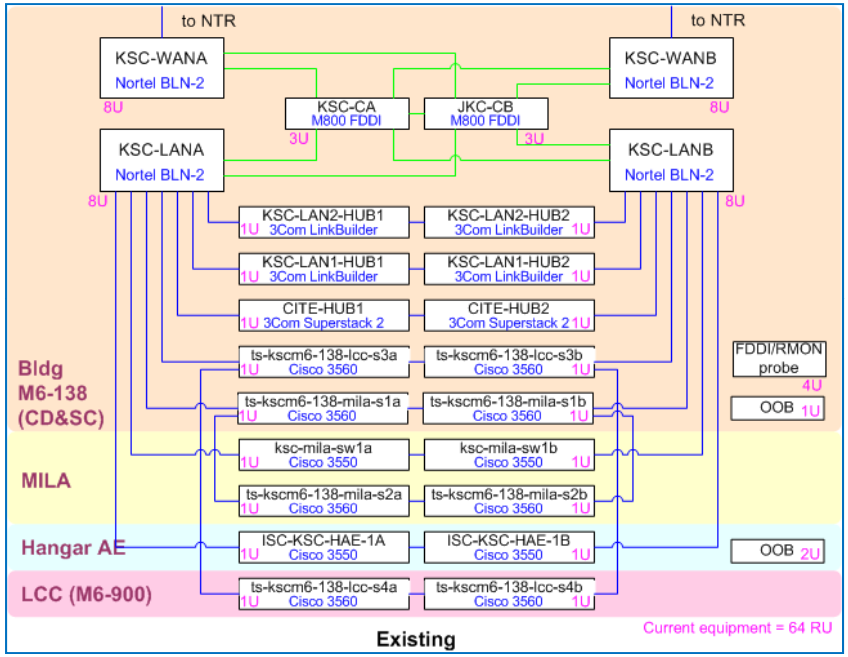

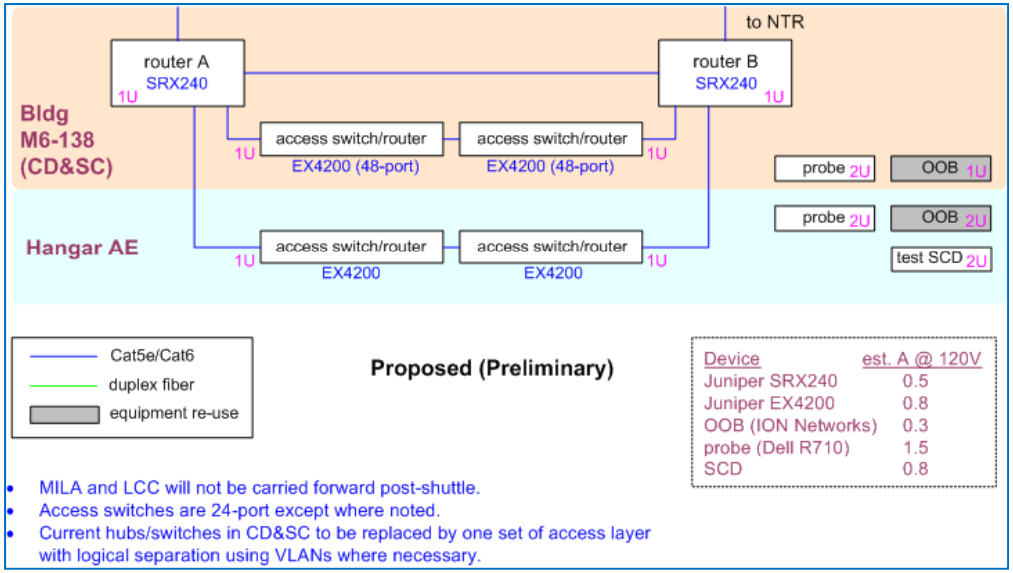

Goddard Space Flight Center

KSC
Rack Elevation Drawing*

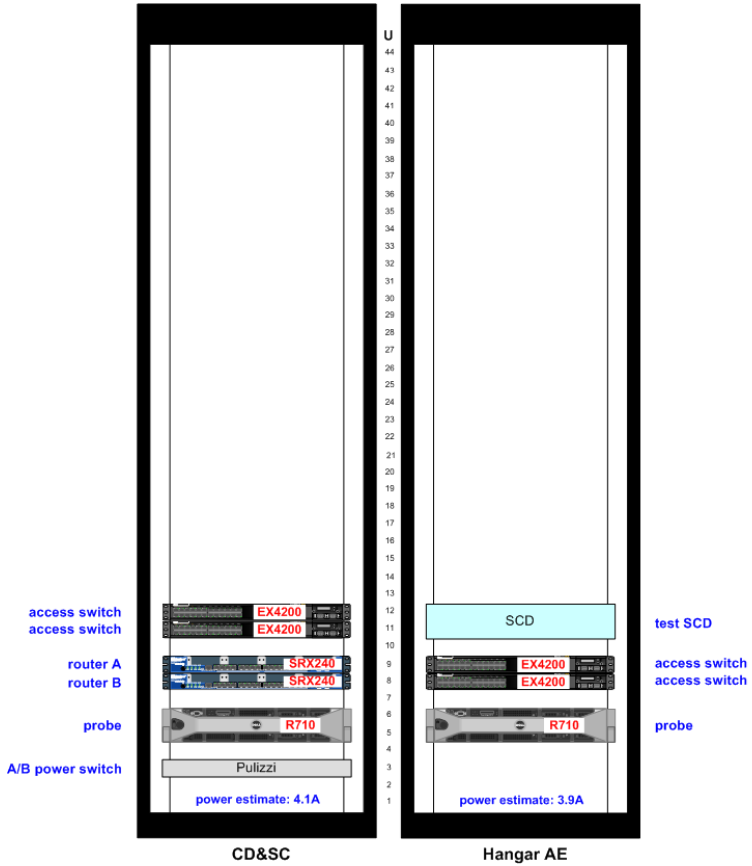

Notes:
1. Drawing represents rack space and power requirements only. Actual configuration to be coordinated with host site.

Updates since CDR:
- Added Pulizzi power switch to CD&SC rack.

Nortel Replacement Equipment
KSC

2011-03-22

*Drawing represents rack space and power requirements only. Actual configuration/implementation to be coordinated with host site.

Goddard Space Flight Center

KSC

Power and Cooling Requirements for NRRP Equipment

Building	Amps	Volts	Watts	Cooling requirement
CD&SC	4.1	120	492	1678 BTUs/Hr
Hangar AE	3.9	120	468	1596 BTUs/Hr

Note: 1 watt = 3.412141633 BTU/Hr

Goddard Space Flight Center

Marshall Space Flight Center (MSFC)
Existing and Proposed NW Designs

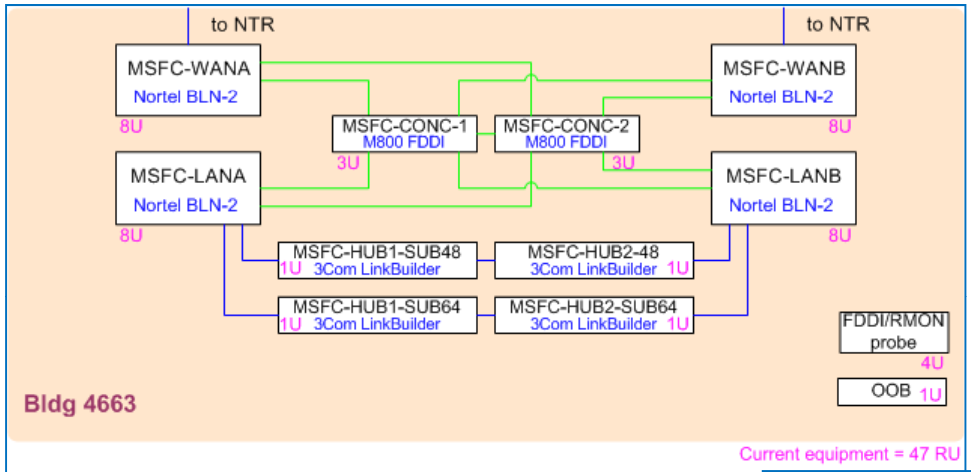

Existing

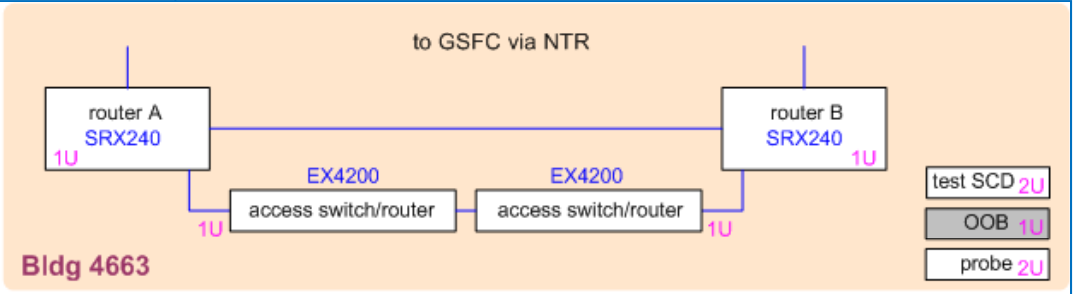

Cat5e/Cat6
duplex fiber
equipment re-use

Proposed (Preliminary)

Device	est. A @ 120V
Juniper SRX240	0.5
Juniper EX4200	0.8
OOB (ION Networks)	0.3
probe (Dell R710)	1.5
SCD	0.8

- MSFC IPTX equipment is localized in the HOSC; only a handful of SCDs are expected to be needed after shuttle.

Goddard Space Flight Center

MSFC
Rack Elevation Drawing*

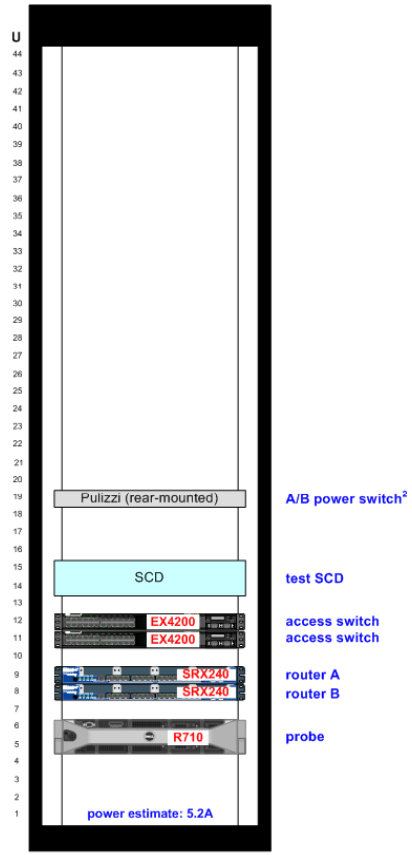

Notes:
1. Drawing represents rack space and power requirements only. Actual configuration to be coordinated with host site.
2. Redundant power sources assumed. Per MSFC, equipment to be distributed across two racks so two Pulizzis will be provided.

Updates since CDR:
- Removed additional OOB device; to reuse existing OOB

Nortel Replacement Equipment
MSFC

2011-03-22

*Drawing represents rack space and power requirements only. Actual configuration/implementation to be coordinated with host site.

Goddard Space Flight Center

MSFC

Power and Cooling Requirements for NRRP Equipment

Building	Amps	Volts	Watts	Cooling requirement
4663	5.2	120	624	2129 BTUs/Hr

Note: 1 watt = 3.412141633 BTU/Hr

Goddard Space Flight Center

National Oceanographic & Atmospheric Administration (NOAA – Suitland MD) Existing and Proposed NW Designs

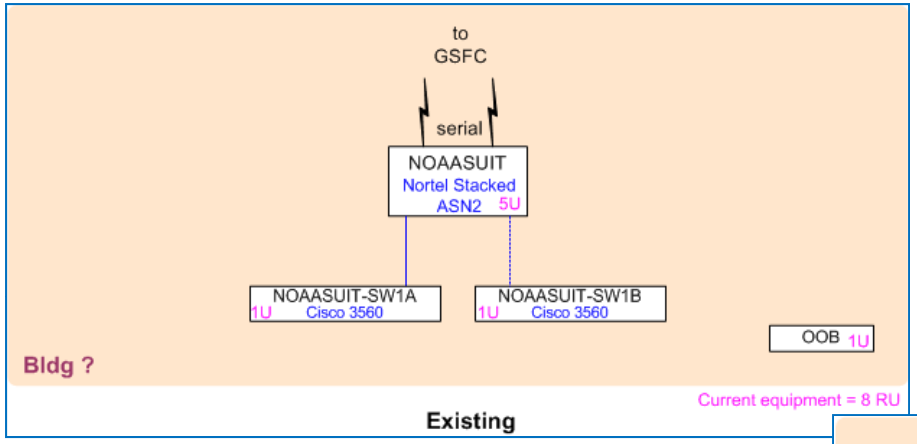

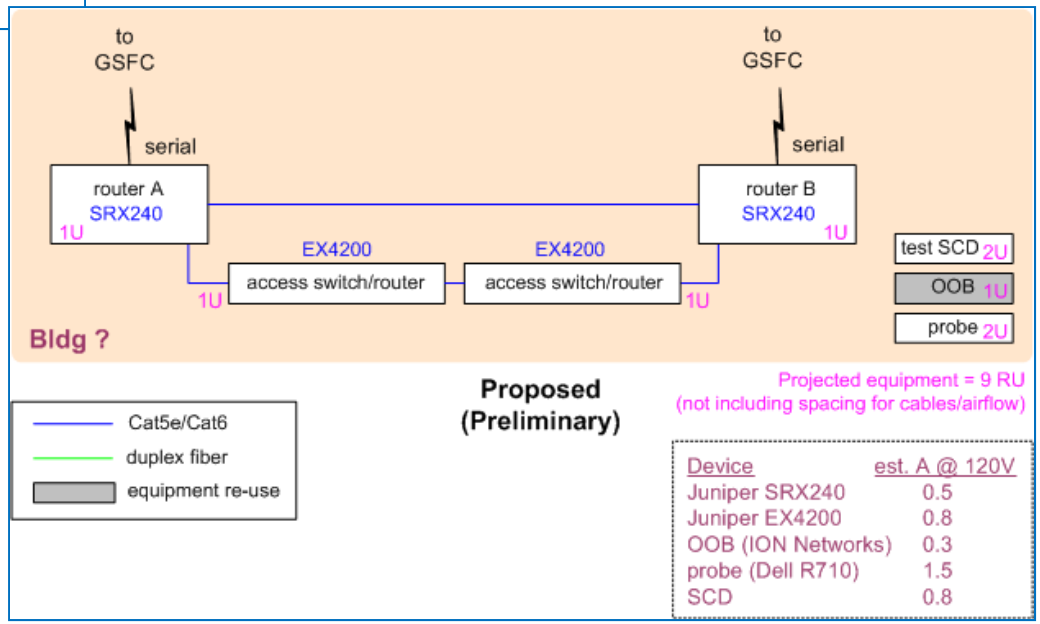

Goddard Space Flight Center

NOAA
Rack Elevation Drawing*

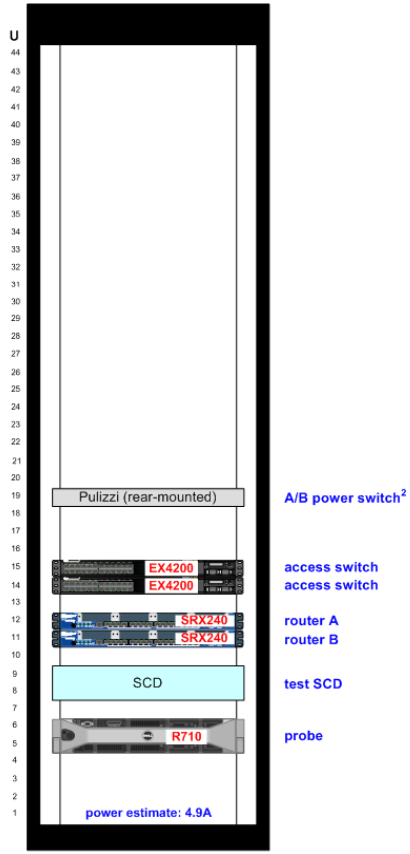

Notes:
1. Drawing represents rack space and power requirements only. Actual configuration to be coordinated with host site.
2. Redundant power sources assumed.

Updates since CDR:
- Removed OOB device from diagram since reusing existing OOB

Nortel Replacement Equipment
NOAA

2011-03-22

*Drawing represents rack space and power requirements only. Actual configuration/implementation to be coordinated with host site.

Goddard Space Flight Center

NOAA

Power and Cooling Requirements for NRRP Equipment

Building	Amps	Volts	Watts	Cooling requirement
TBD	4.9	120	588	2005 BTUs/Hr

Note: 1 watt = 3.412141633 BTU/Hr

Goddard Space Flight Center

Schriever Air Force Base (SAFB)
Existing and Proposed NW Designs

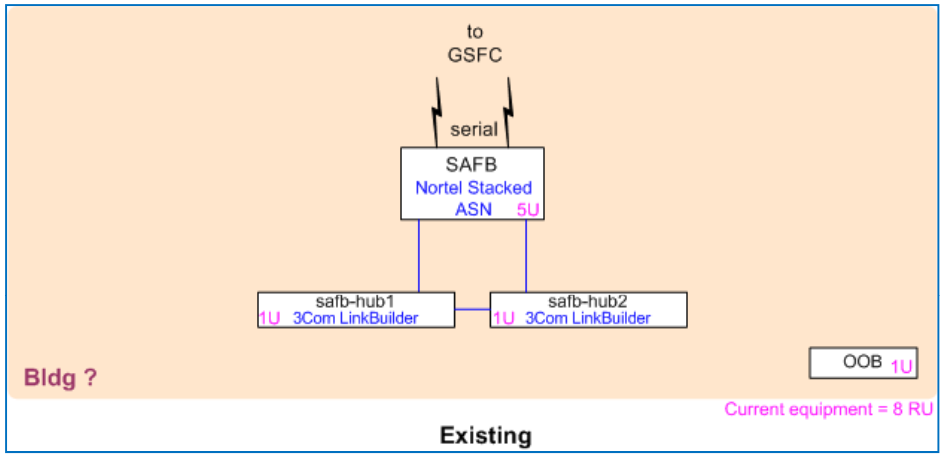

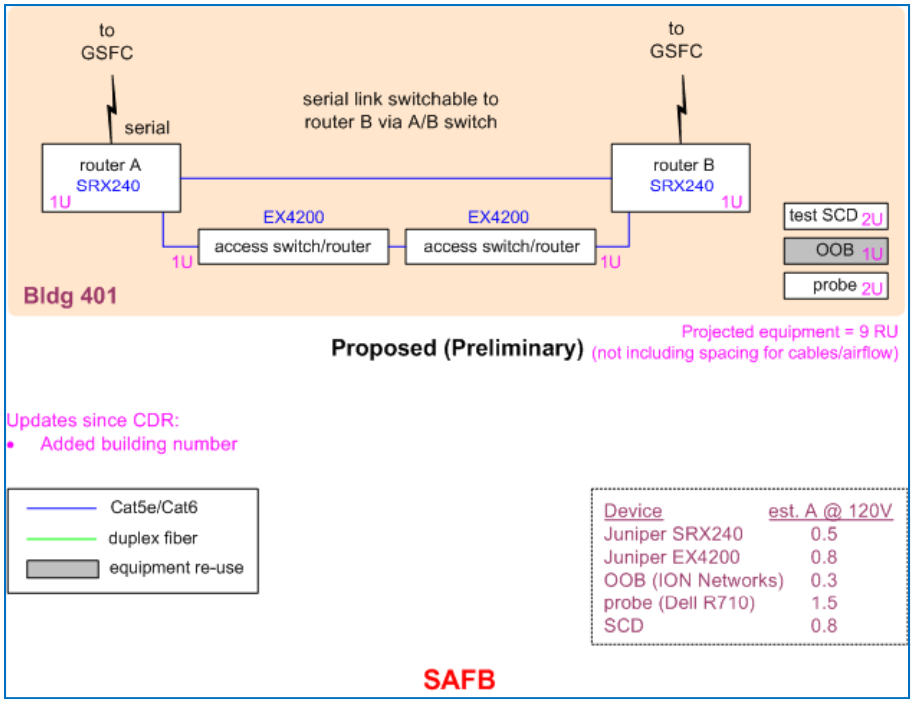

Goddard Space Flight Center

SAFB
Rack Elevation Drawing*

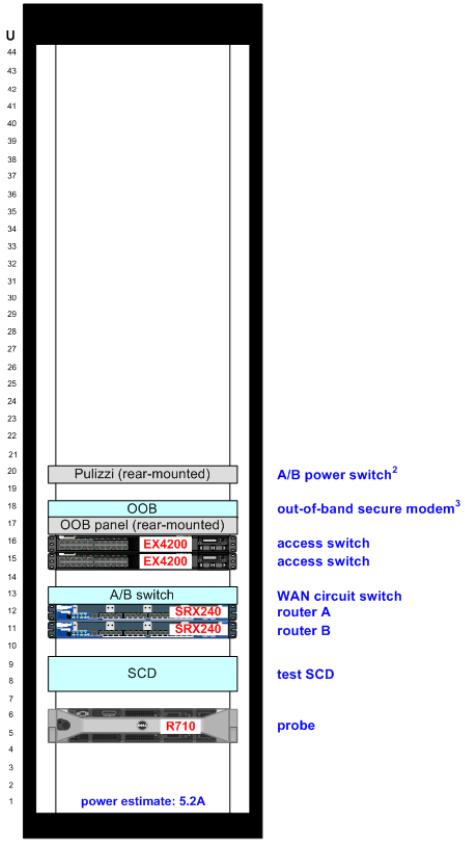

Notes:
1. Drawing represents rack space and power requirements only. Actual configuration to be coordinated with host site.
2. Redundant power sources assumed.

Updates since CDR:
- Added A/B switch
- Additional OOB device may be needed for 2nd floor of Bldg 401 (rm 229)

Nortel Replacement Equipment
SAFB

2011-03-22

*Drawing represents rack space and power requirements only. Actual configuration/implementation to be coordinated with host site.

Goddard Space Flight Center

SAFB

Power and Cooling Requirements for NRRP Equipment

Building	Amps	Volts	Watts	Cooling requirement
TBD	5.2	120	624	2129 BTUs/Hr

Note: 1 watt = 3.412141633 BTU/Hr

Goddard Space Flight Center

Vandenberg Air Force Base (VAFB) Existing and Proposed NW Designs

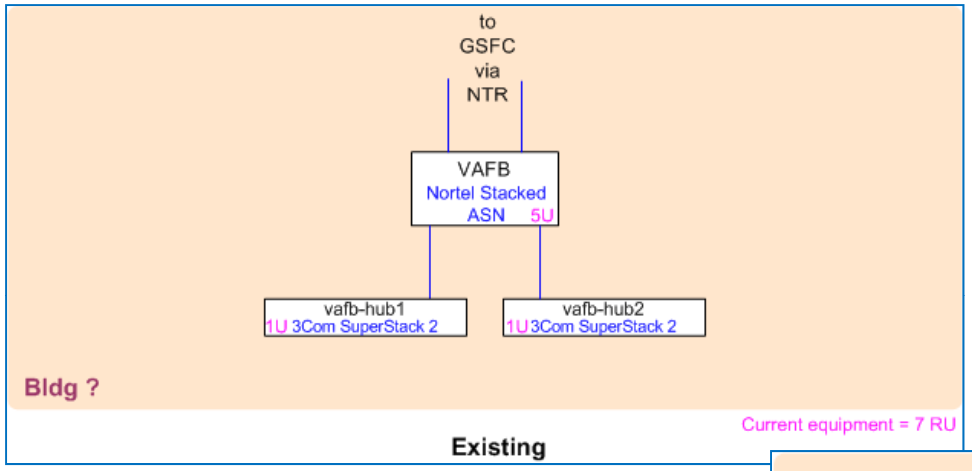

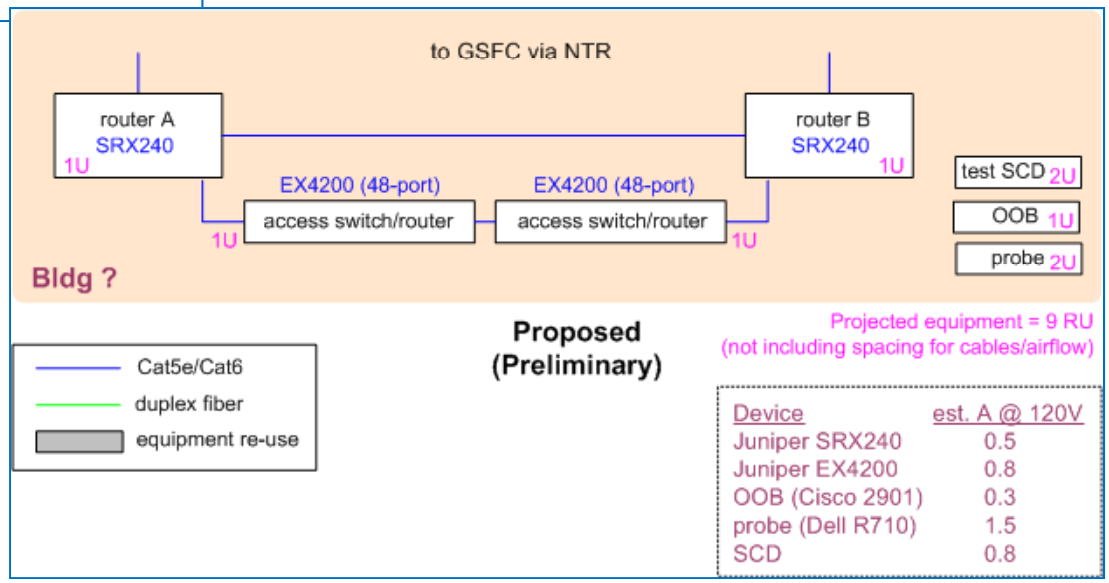

Device	est. A @ 120V
Juniper SRX240	0.5
Juniper EX4200	0.8
OOB (Cisco 2901)	0.3
probe (Dell R710)	1.5
SCD	0.8

Goddard Space Flight Center

VAFB
Rack Elevation Drawing*

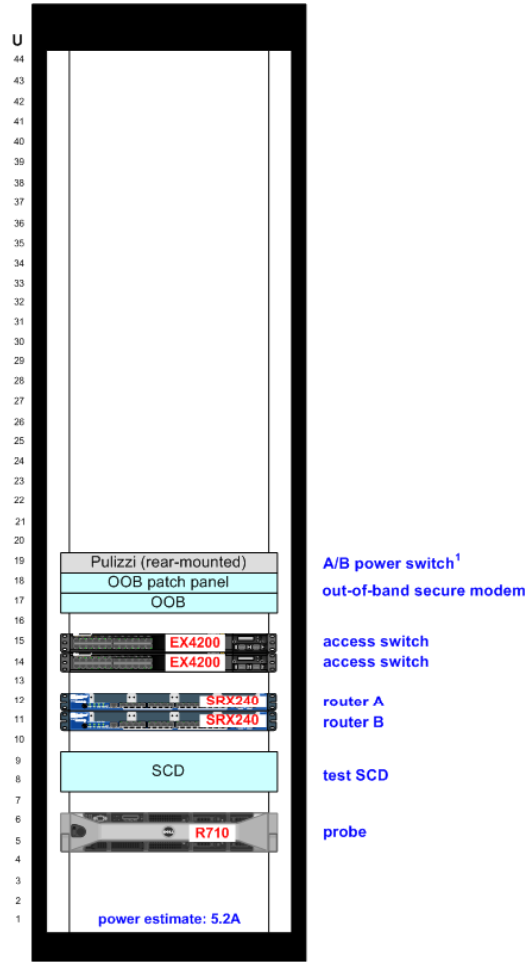

*Drawing represents rack space and power requirements only. Actual configuration/implementation to be coordinated with host site.

Notes:
1. Redundant power sources assumed.

Goddard Space Flight Center

VAFB

Power and Cooling Requirements for NRRP Equipment

Building	Amps	Volts	Watts	Cooling requirement
TBD	5.2	120	624	2129 BTUs/Hr

Note: 1 watt = 3.412141633 BTU/Hr

Goddard Space Flight Center

White Sands Complex (WSC) – Second TDRSS Ground Terminal (STGT) Existing and Proposed NW Designs

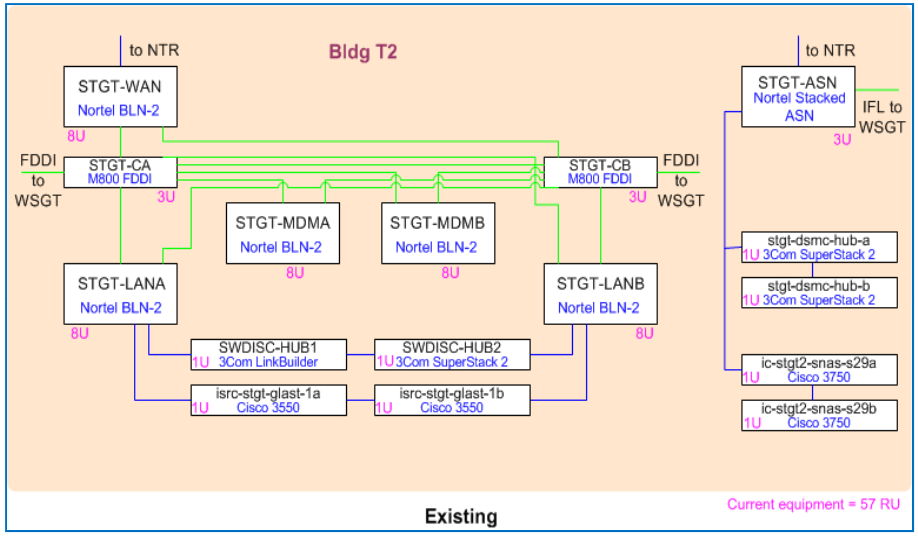

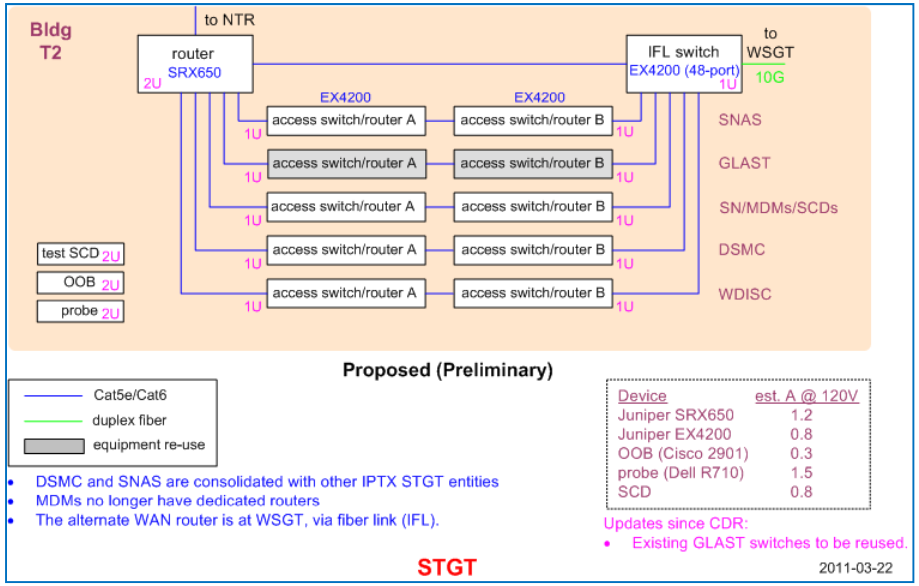

Goddard Space Flight Center

WSC – STGT
Rack Elevation Drawing*

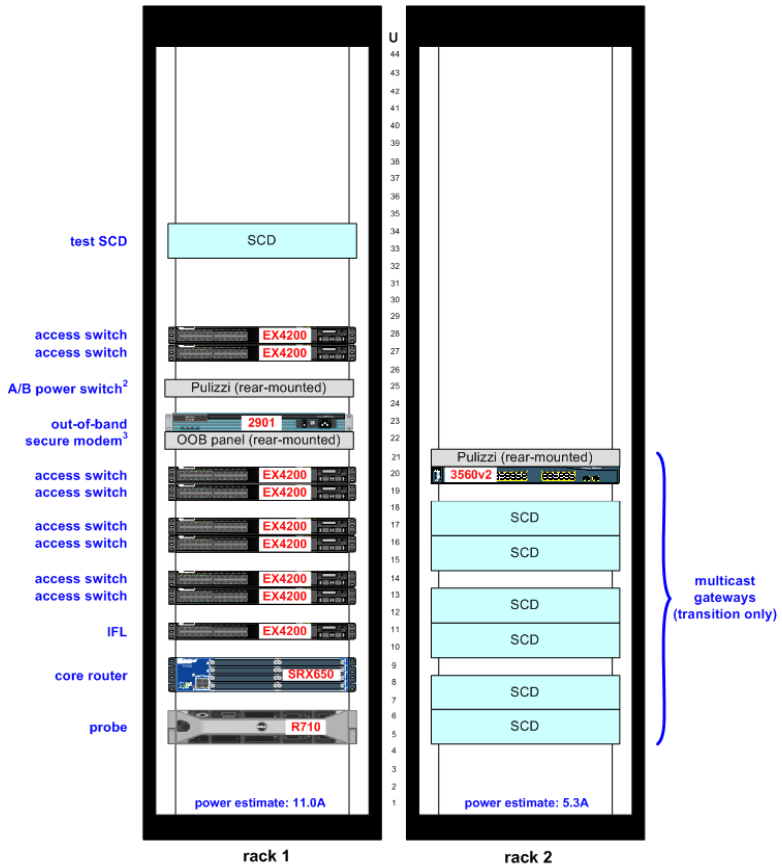

Notes:
1. Drawing represents rack space and power requirements only. Actual configuration to be coordinated with host site.
2. Redundant power sources assumed.
3. Requires analog phone line.

Updates since CDR:
- Deleted one pair of EX4200s; existing GLAST switches to be reused.

Nortel Replacement Equipment
STGT

2011-03-22

*Drawing represents rack space and power requirements only. Actual configuration/implementation to be coordinated with host site.

Goddard Space Flight Center

WSC – STGT

Power and Cooling Requirements for NRRP Equipment

Building	Rack	Amps	Volts	Watts	Cooling requirement
TBD	1	11.0	120	1320	4501 BTUs/Hr
TBD	2	5.3	120	636	2169 BTUs/Hr

Goddard Space Flight Center

WSC – White Sands Ground Terminal (WSGT)
Existing and Proposed NW Designs

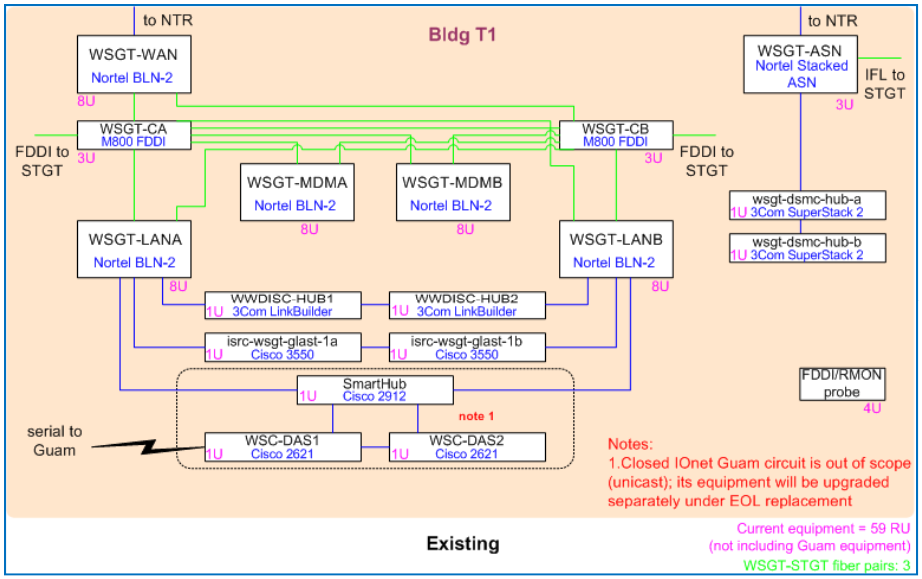

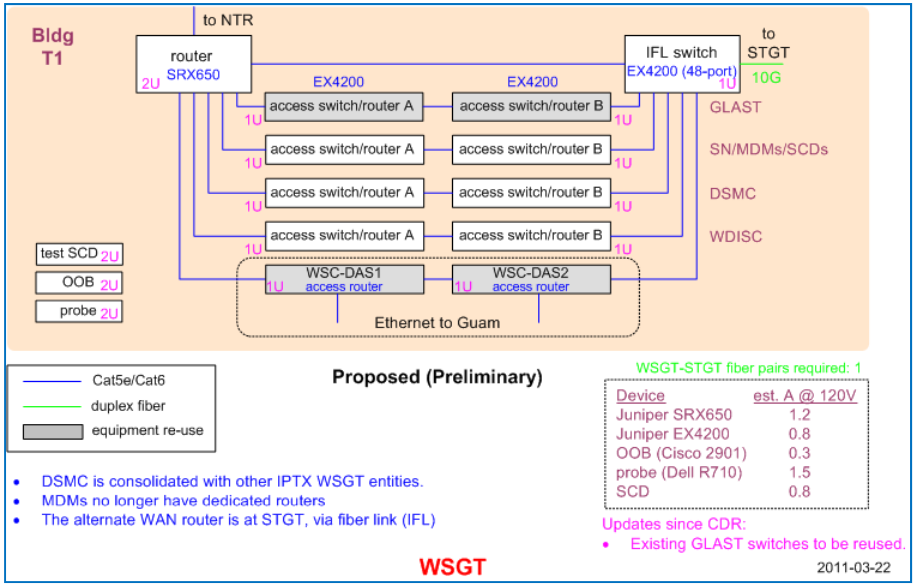

Goddard Space Flight Center

WSC – WSGT
Rack Elevation Drawing*

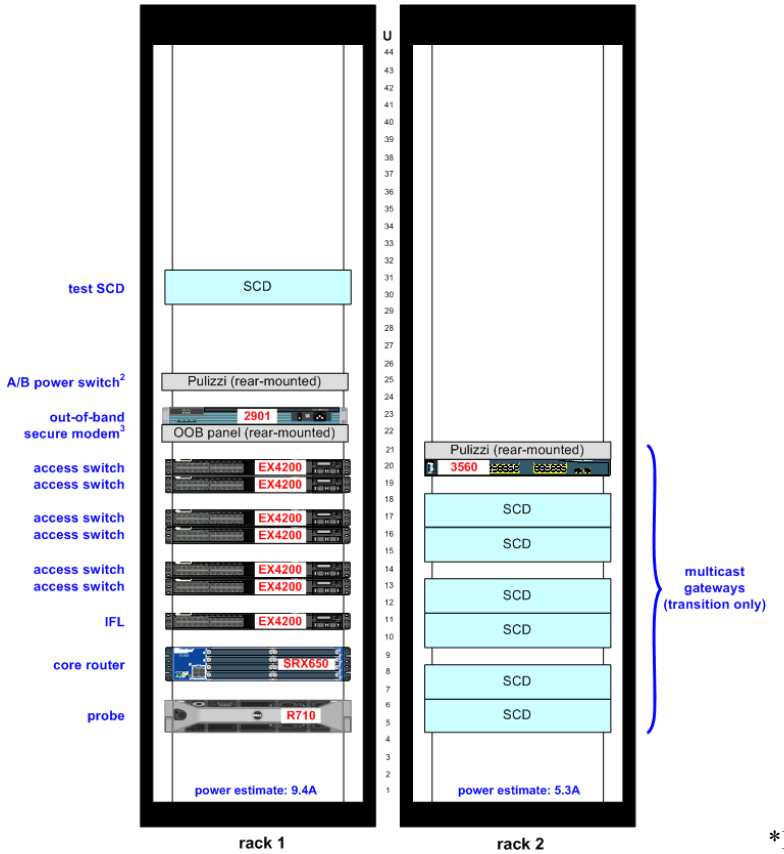

Notes:
1. Drawing represents rack space and power requirements only. Actual configuration to be coordinated with host site.
2. Redundant power sources assumed.
3. Requires analog phone line.

Updates since CDR:
- Deleted one pair of EX4200s; existing GLAST switches to be reused.

Nortel Replacement Equipment
WSGT

2010-12-09

*Drawing represents rack space and power requirements only. Actual configuration/implementation to be coordinated with host site.

Goddard Space Flight Center

WSC – WSGT

Power and Cooling Requirements for NRRP Equipment

Building	Rack	Amps	Volts	Watts	Cooling requirement
TBD	1	9.4	120	1128	3846 BTUs/Hr
TBD	2	5.3	120	636	2169 BTUs/Hr

Goddard Space Flight Center

Wallops Flight Facility (WFF)
Existing and Proposed NW Designs

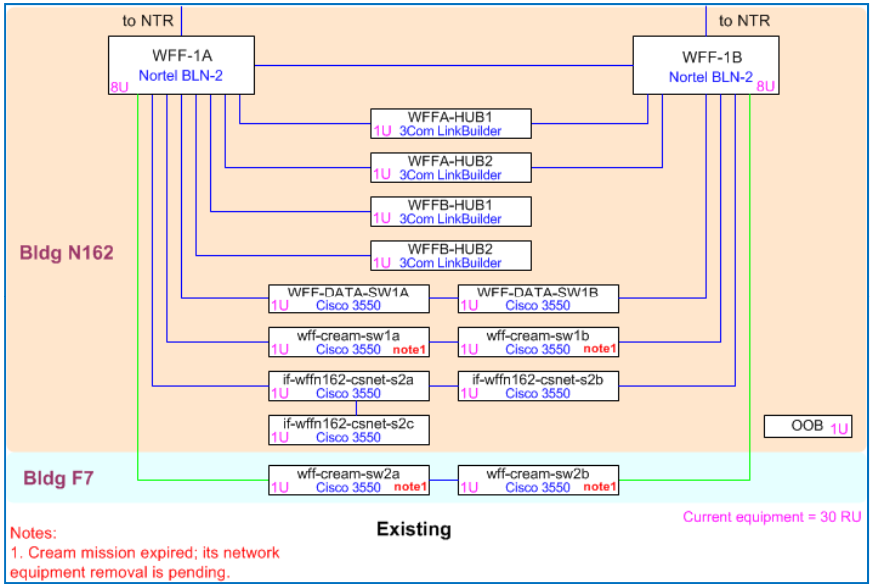

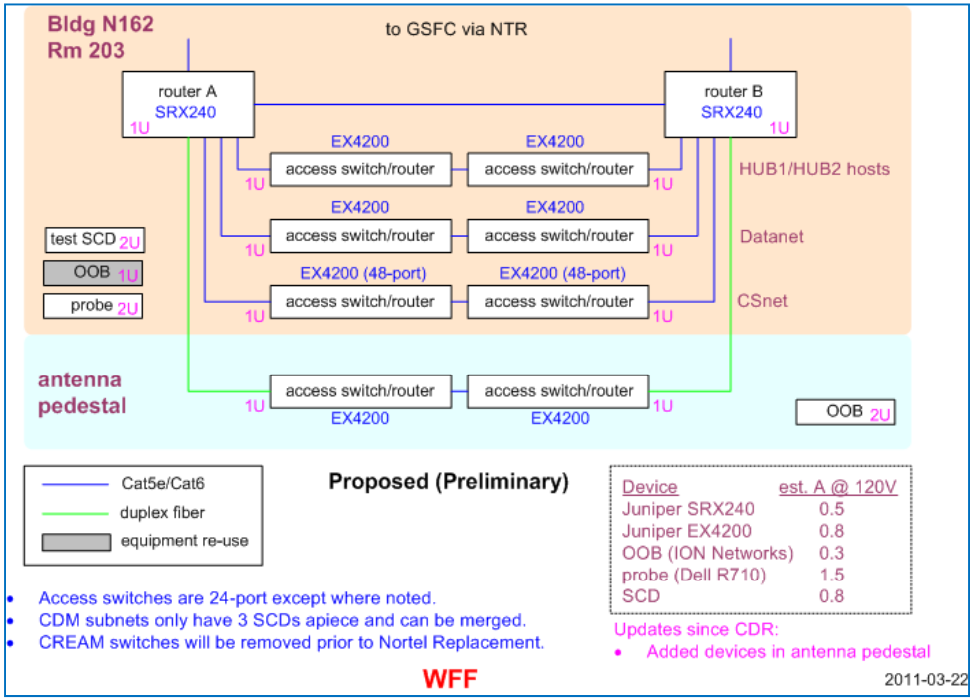

Goddard Space Flight Center

WFF
Rack Elevation Drawing*

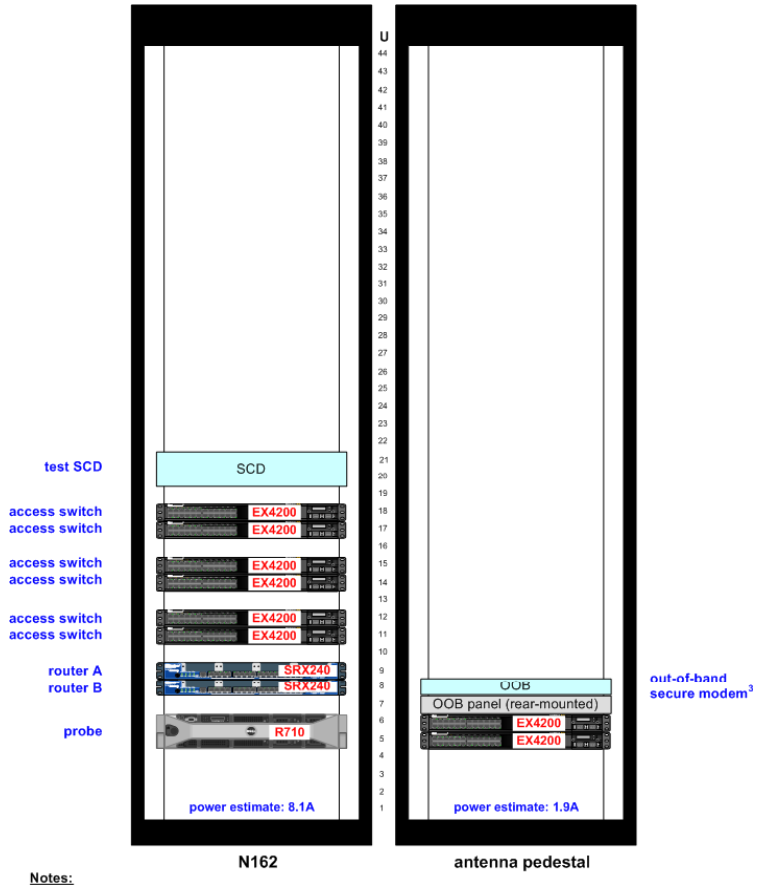

Notes:
1. Drawing represents rack space and power requirements only. Actual configuration to be coordinated with host site.

Updates since CDR:
- Added devices in antenna pedestal

Nortel Replacement Equipment
WFF

2011-03-22

*Drawing represents rack space and power requirements only. Actual configuration/implementation to be coordinated with host site.

Goddard Space Flight Center

WFF

Power and Cooling Requirements for NRRP Equipment

Building	Amps	Volts	Watts	Cooling requirement
N162	8.1	120	972	3315 BTUs/Hr
Antenna Pedestal	1.9	120	228	777 BTUs/Hr

Goddard Space Flight Center

Device Recommendations

- Device recommendations for the NRRP Detailed Design are based on the results of the results of the *Equipment Assessment and Recommendation for the NRRP (ref. Section 2.6, Recommendations)*
- Device Platforms and Categories Assessed:
  - ***Access* category**: Switches and/or routers that directly connect to user devices or SCDs and constitute the edge of the NISN-managed network infrastructure
  - ***Distribution* category:** Intermediate routers that aggregate connections from multiple *access* devices. Specifically, these are routers with WAN and Ethernet interfaces to a number of tail sites.
  - ***Core* category:** Network infrastructure backbone routers that provide high-speed transit between *distribution* and *access* devices

Platform	Access		Distribution	Core	
	Ethernet	Serial		GSFC	Other Major Centers
Cisco 3560v2	√				
Juniper EX3200	√				
Juniper EX4200	√				
Cisco 2911		√			
Juniper J2320		√			
Juniper SRX240		√			
Cisco 39x5			√		√
Juniper J6350			√		√
Juniper SRX650			√		√
Cisco 65xx				√	
Juniper MX480				√	

Devices recommended for the NRRP are highlighted in green

Goddard Space Flight Center

Device Recommendations (cont.)

- Within each device category, a number of factors were considered:
  1. Lab test results. Because both these vendors are already prevalent in the current Mission Network, lab testing focused on capabilities not yet used operationally or not yet used on a significant scale. The prime example is Source Specific Multicast (SSM) operation. Other significant capabilities that were tested included Quality of Service (QoS) and performance monitoring.
  2. Significant findings of other assessment matrix requirements not involving lab testing. Familiarity with these vendors enabled many of the matrix requirements to be assessed from operational experience, particularly those involving device manageability and security features. A number of requirements were also assessed with the help of vendor documentation.
  3. Estimated costs for equipment and annual vendor support. These are based on vendor-provided budgetary discount rates.
  4. Rack space requirements.
  5. The current phase of the product lifecycle. The primary risk of newer products or product families is undiscovered issues, whereas with very mature products the primary concern is a shorter timeframe until the end of vendor sale and support.
  6. Additional considerations not covered elsewhere. These include the larger Mission Network environment and noteworthy product features not specifically identified in the requirements.

Goddard Space Flight Center

Device Recommendations (cont.)

Ethernet Access Platform

Of the three contenders, the Catalyst 3560v2 experienced the most issues with multicast operation, including performance and configuration caveats in the SSM mapping scenario. It is also the most expensive option despite being a Fast Ethernet device vs. Gigabit Ethernet of the two Juniper EX variants, and lacks Netflow/sFlow support. All three models have issues with incorrect multicast traffic counters that are problematic but not considered show stoppers. The counters increment but not at correct rates. An operational work-around if precise counts are needed for troubleshooting is to use probes and port mirroring.

The recommendation is the EX4200. Although the EX3200 is significantly less expensive than the EX4200, its port overlap between the top four copper ports and the modular SFP ports is undesirable. Concern over potential use of the SFP ports and ambiguous configuration templates could limit standard usage to 20 copper ports. Part of the additional cost of the EX4200 is a redundant power supply included in the estimated cost. The faster CPU and greater memory of the EX4200 should enable more scalable multicast operation. The EX4200 is widely deployed on the GSFC CNE network with favorable results, although multicast is not applicable. A potential minor plus is the EX4200's virtual chassis stacking capability but that feature is not currently envisioned for use on the Mission Network.

Serial Access Platform

All the candidate platforms experienced multicast issues during testing which were subsequently fixed by new vendor code.

A concern with the entire Cisco Integrated Services Router (ISR) family is the lack of integration between the router chassis and EtherSwitch module. The EtherSwitch module requires its own, different software image and configuration. Direct support for OSPF on the switch would require an extra-cost code upgrade from the base image. The 2911 is a two rack-unit (RU) chassis vs. one RU for the J2320 and SRX 240. The cost of the 2911 is comparable to the J2320 but the SRX240 is about 45% less.

The J2320 requires a Physical Interface Module (PIM) to go beyond four Ethernet ports. The J-series is being eclipsed by the newer SRX line so its product lifetime is a negative. It is also significantly more expensive than the SRX240.

The SRX 240 comes with 16 integrated 10/100/1000 ports. The main concern with the SRX is product maturity but lab testing completed so far has been favorable. Due primarily to its combination of integrated switch/router ports, low cost, and anticipated product longevity, the SRX 240 is recommended.

Goddard Space Flight Center

Device Recommendations (cont.)

WAN Aggregation Platform

All three candidates experienced multicast issues during testing which were subsequently fixed by new vendor code. User edge protocols such as IGMP and SSM mapping, along with their associated issues, are not relevant to distribution or core devices including WAN aggregation routers.

The SRX650 does not currently support serial WAN modules. Serial modules are not expected to be available for this model until early 2012 which obviously prevents its deployment as a serial WAN aggregation device prior to then.

Of the remaining two contenders, the J6350 has a much lower unit cost than the 3925. Precursor J6300's are currently used for WAN aggregation on the non-multicast portion of Closed IOnet as well as Open IOnet. However, the concern with the J series devices is product longevity due to the introduction of the SRX series in 2009. Given the lack of SRX serial capability and the concerns with J6350 remaining lifetime, Juniper has offered to upgrade the J6350 WAN aggregation routers to SRX650's at no cost once the SRX serial modules become available.

Pending the availability of 4- and 8-port serial modules for the SRX 650, the 3925 has the highest serial port density of the three options. However, high Ethernet port count requires an EtherSwitch module having the lack of integration noted previously. A further wrinkle is that the QoS capabilities of the EtherSwitch are not as advanced as those on on-board router interfaces. WAN Ethernet connections requiring Hierarchical QoS (HQoS) would be limited to on-board Ethernet interfaces and/or 1- or 2-port High-Speed WAN Interface Controller (HWIC) modules.

The recommendation for GSFC WAN aggregation routers is the J6350, with the option to upgrade to the SRX650 when serial capability becomes available.

Remote Site Core Platform

This category only pertains to non-GSFC sites with a significant number of access devices anticipated, currently only WSC and KSC. The same three devices considered for WAN distribution were also assessed for this category since several of the major requirements are the same:
Scalable to support more than a few downstream access devices
HQoS capability for WAN Ethernet
Power supply redundancy

The main reason for not selecting the SRX650 for the GSFC WAN aggregation (lack of serial interfaces) does not apply here, as these devices are expected to only support Ethernet. The recommendation is the SRX650 due to the overall combination of lab test results, cost, size, and expected product longevity.

Goddard Space Flight Center

Device Recommendations (cont.)

GSFC Core Platform

Both the Catalyst 6500 and MX480 should work well as large core devices. Both are deployed elsewhere on the Mission Network. The Catalyst has the clear cost advantage, whereas the primary advantage of the MX would be to provide architectural consistency with the upgrades of the Open IOnet core (in progress) and RIOnet core (procurement completed). However, the MX commonality would not include the line cards, as newer Modular Processor Concentrator (MPC) based blades would be recommended at this point over the predecessor Dense Port Concentrator (DPC) blades.

The recommendation is the Catalyst 6500. It satisfies the requirements at significantly lower cost, both for initial equipment purchase and ongoing vendor support.

IFL Platform

Either vendor's product should work well in this function. The Juniper EX4200 series is recommended due to lower cost and higher fiber port density. The alternative Cisco solution is currently complicated by the introduction of the X-series switches without a fiber-based model. Consistency with the pending EX4200 upgrade of the Open IOnet/Restricted IOnet IFL is also a plus. Given the recommendation of the EX4200 as the Nortel Replacement access device, it also minimizes the overall number of platform types needed.

Section 5. Implementation & Transition

Goddard Space Flight Center

Implementation and Transition Overview

- Slides 77-84 provide a graphic representation of the NRRP phased approach to:
  - Implementation of the NRRP parallel (replacement) network (Phases 1 & 2)
  - Pre-transition testing (Phase 3)
  - Pilot Program initiation and completion (Phases 4a &4b)
  - Transition of existing services to the NRRP parallel (replacement) network (Phases 5a & 5b)
  - Decommissioning of legacy network (Phase 6)
- The *NRRP Implementation Plan* defines the programmatic and technical approach to be used for the implementation of the NRRP parallel (replacement) network (02/25/11)
- The *NRRP Transition and Acceptance Test Plan* defines the programmatic and technical approach to be used for the transition of existing services to the NRRP parallel (replacement) network (09/30/11)
- The *NRRP Technical/Transition Readiness Review (TRR)* will be conducted after Phase 3 to verify that the NRRP is ready to transition existing services to the NRRP parallel (replacement) network (11/07/11)

Goddard Space Flight Center

Implementation & Transition Approach – Phase 1.Build Parallel (SSM) NW Infrastructure

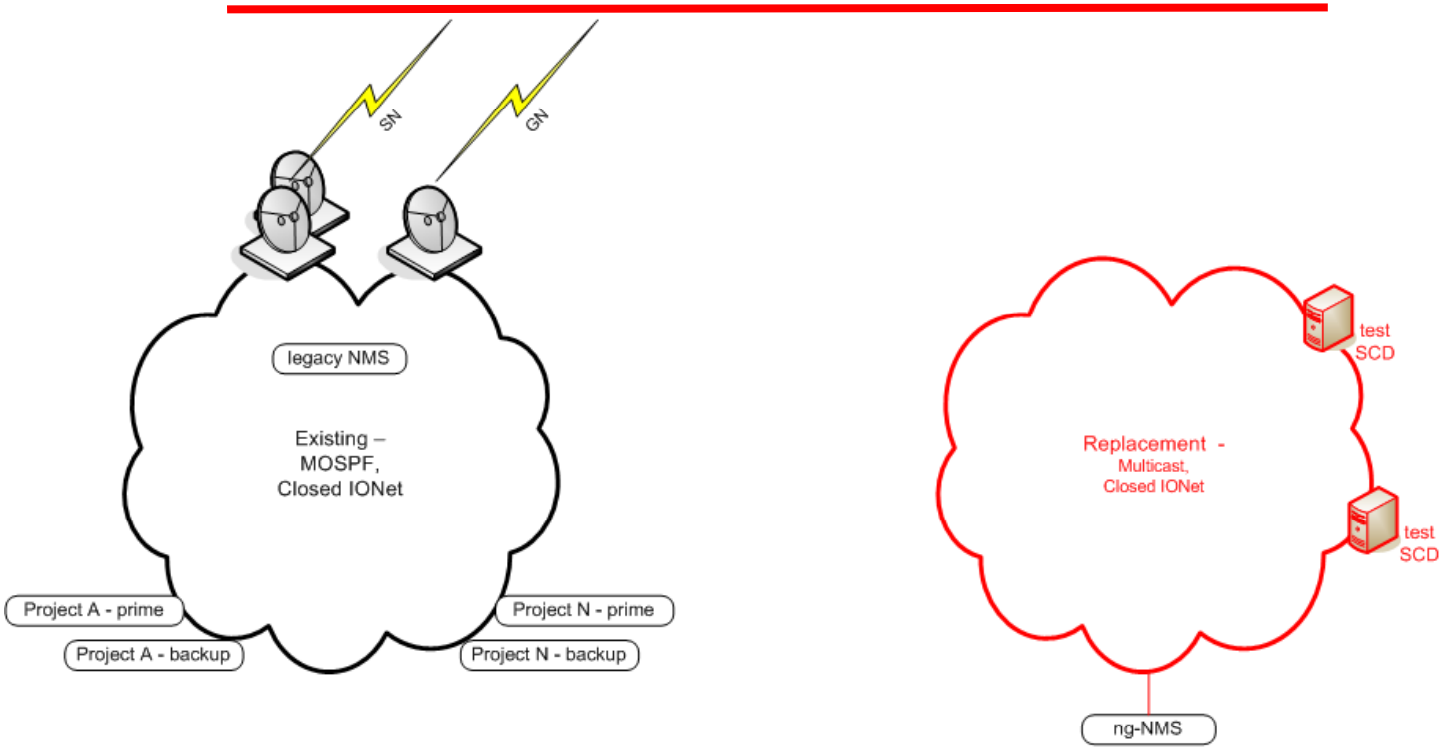

1. Build Parallel (SSM) Network Infrastructure

deltas in red

Goddard Space Flight Center

Implementation & Transition Approach (cont.) – Phase 2. Implementation of Gateways

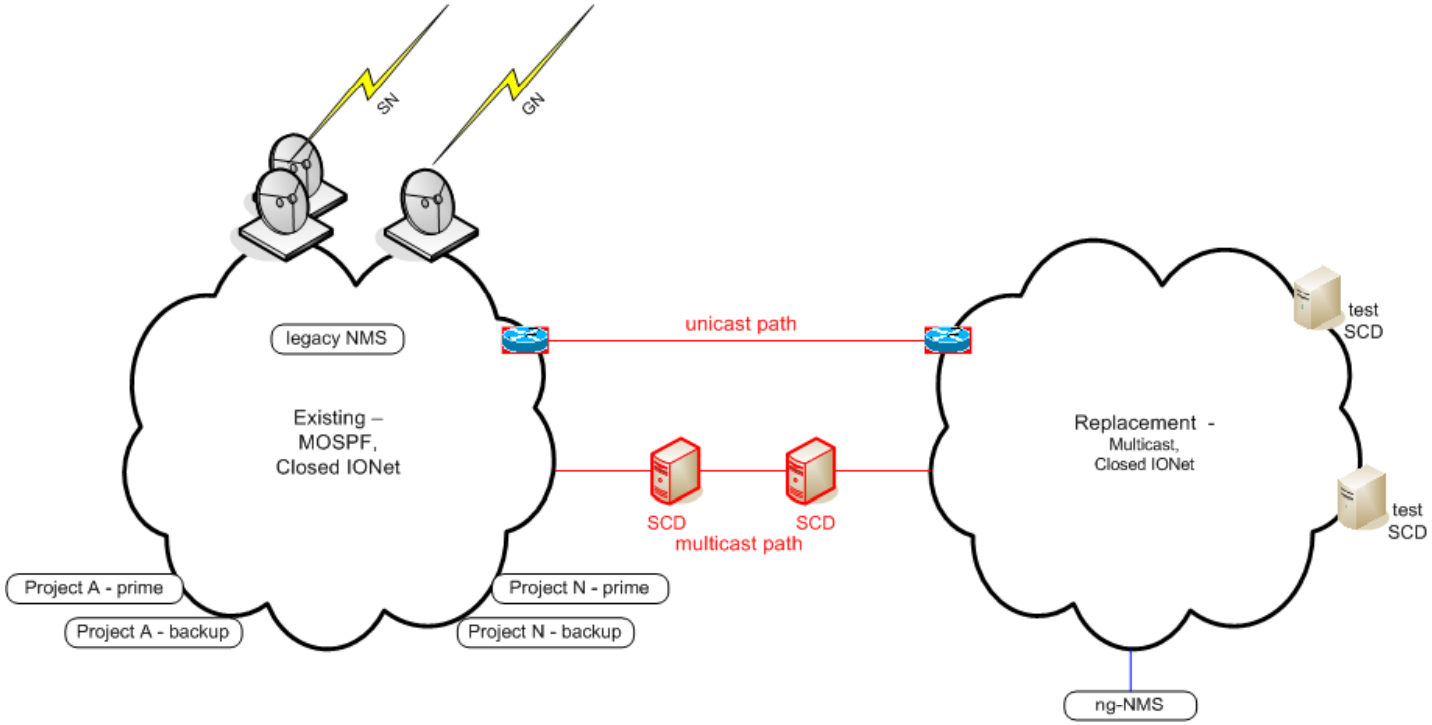

Notes:
1) Unicast gateways will be routers running BGP. Primary pair at GSFC Bldg 14, backup pair at GSFC Bldg 32.
2) Multicast gateways will be SCDs. Redundant sets of SCDs will be deployed at GSFC and WSC.

2. Implementation of Gateways between the existing MOSPF Segment of the Closed IONet and the New, Parallel, Multicast, Closed IONet Network Infrastructure

deltas in red

Goddard Space Flight Center

Implementation & Transition Approach (cont.) – Phase 3. Pre-Transition Testing

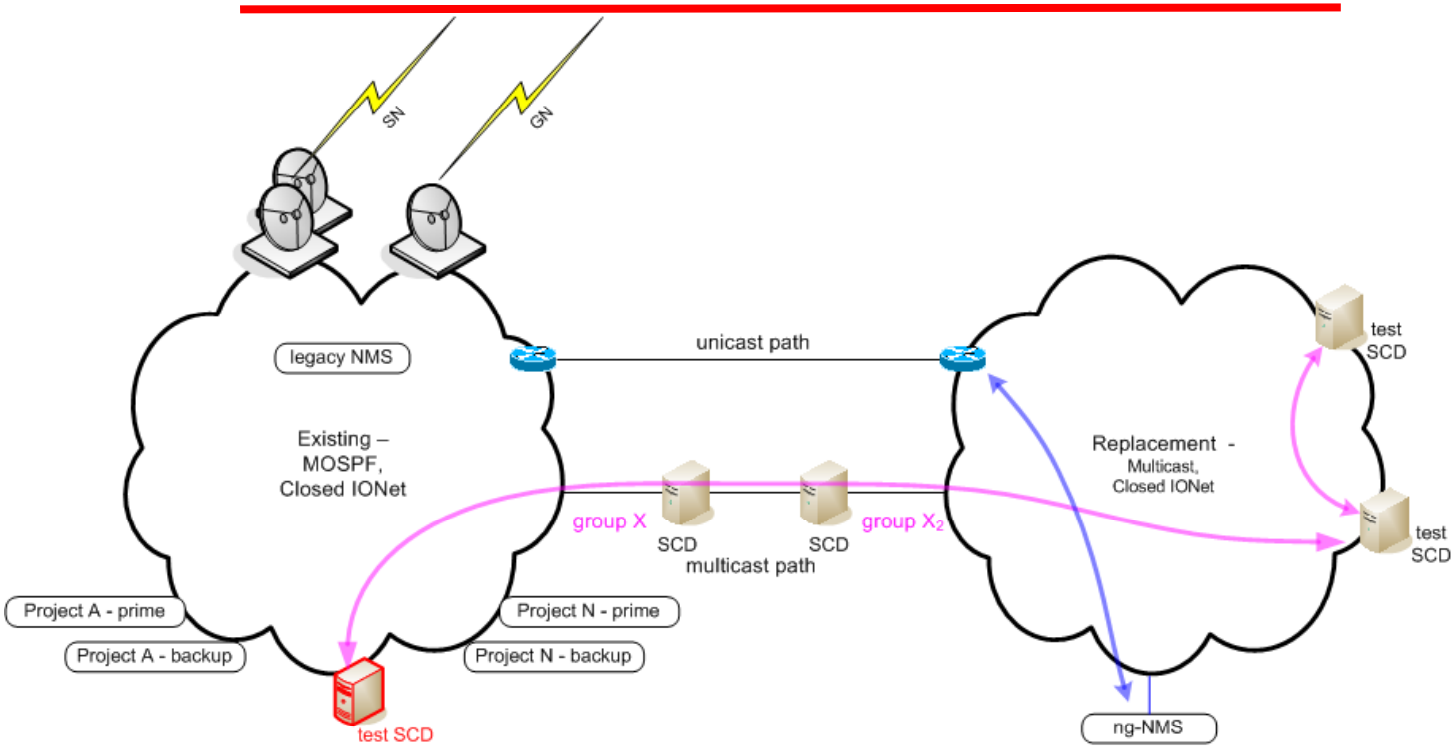

Notes:
1) Multicast flows in pink, unicast in blue.

3. Pre-Transition Testing
deltas in red

Goddard Space Flight Center

Implementation & Transition Approach (cont.) – Phase 4a. Pilot Program (Phase 1)

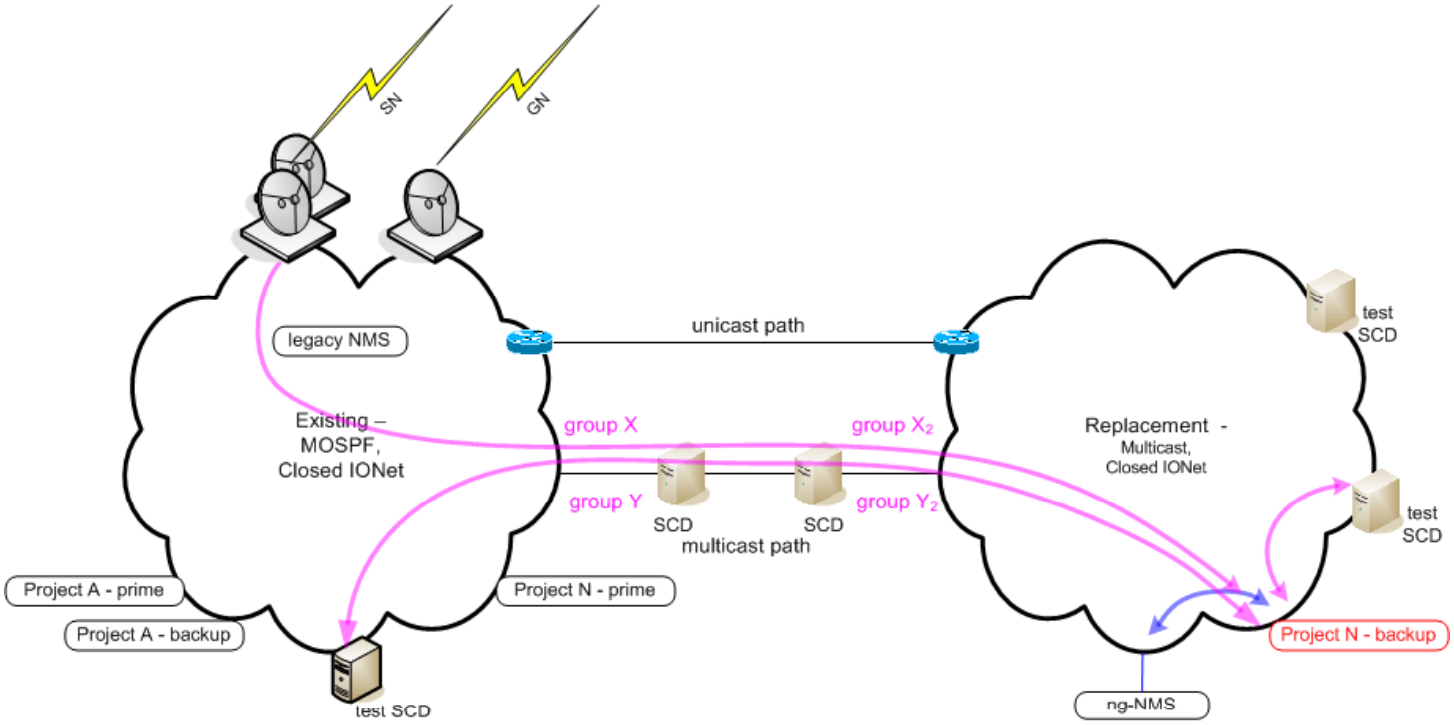

Notes:
1) Multicast flows in pink, unicast in blue.

4a. Pilot Program (phase 1)
Cut over a backup, non-critical user segment

deltas in red

Goddard Space Flight Center

Implementation & Transition Approach (cont.) – Phase 4b. Pilot Program (Phase 2)

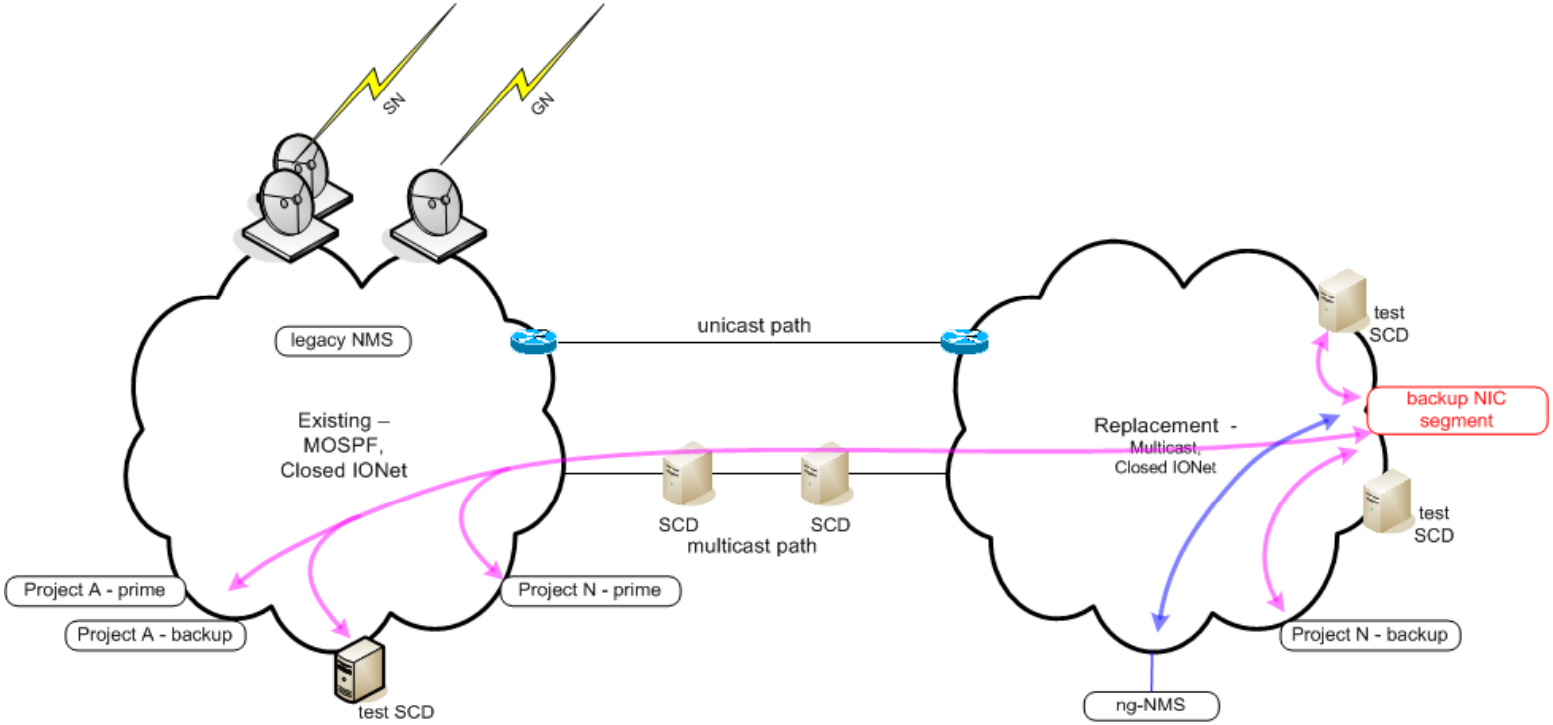

Notes:
1) Multicast flows in pink, unicast in blue.

4b. Pilot Program (phase 2)
Cut over the backup NIC segment

deltas in red

Goddard Space Flight Center

Implementation & Transition Approach (cont.) – Phase 5a. Transition (Phase 1)

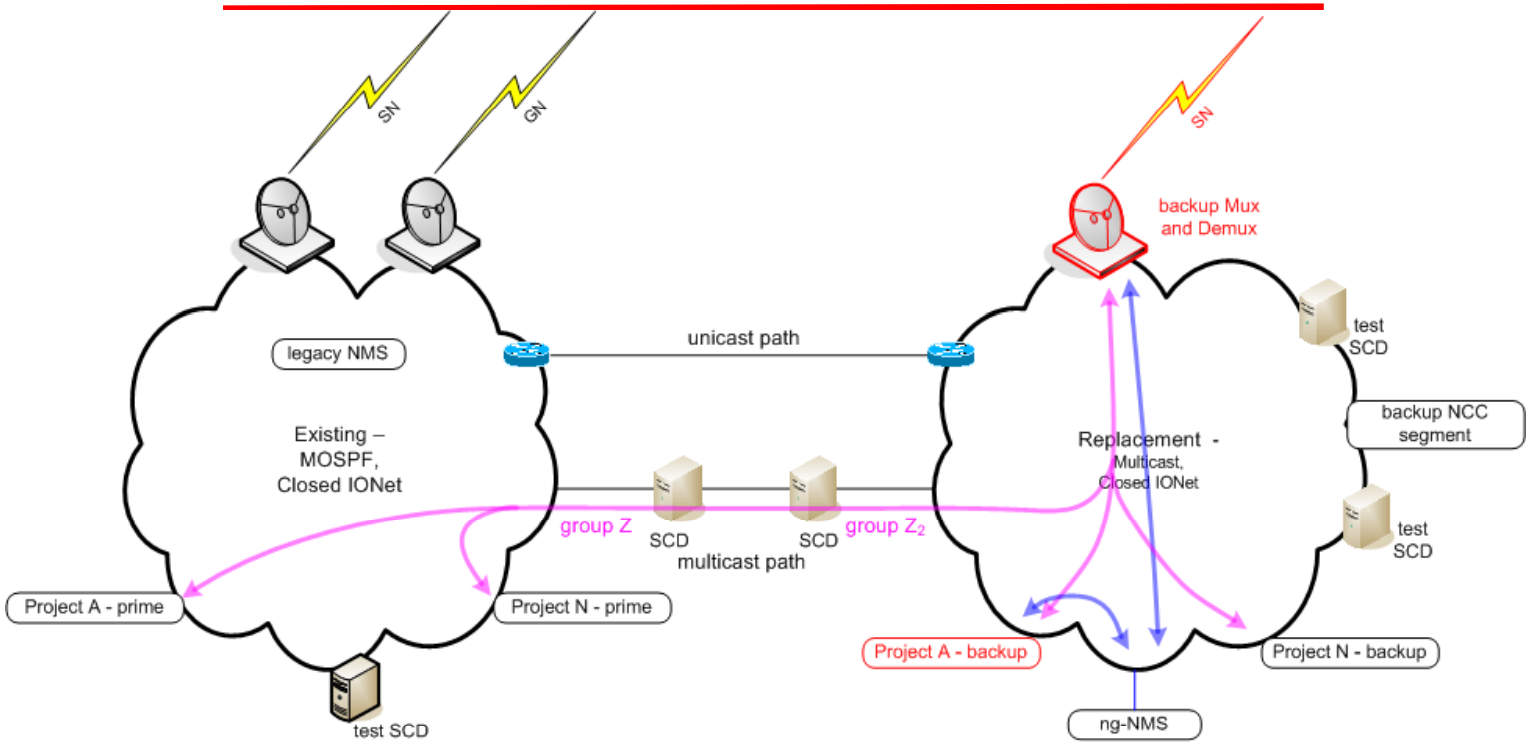

Notes:
1) Multicast flows in pink, unicast in blue.

5a. Transition (phase 1)
Cut over other backup project segments and backup Mux/Demux
deltas in red

Goddard Space Flight Center

Implementation & Transition Approach (cont.) – Phase 5b. Transition (Phase 2)

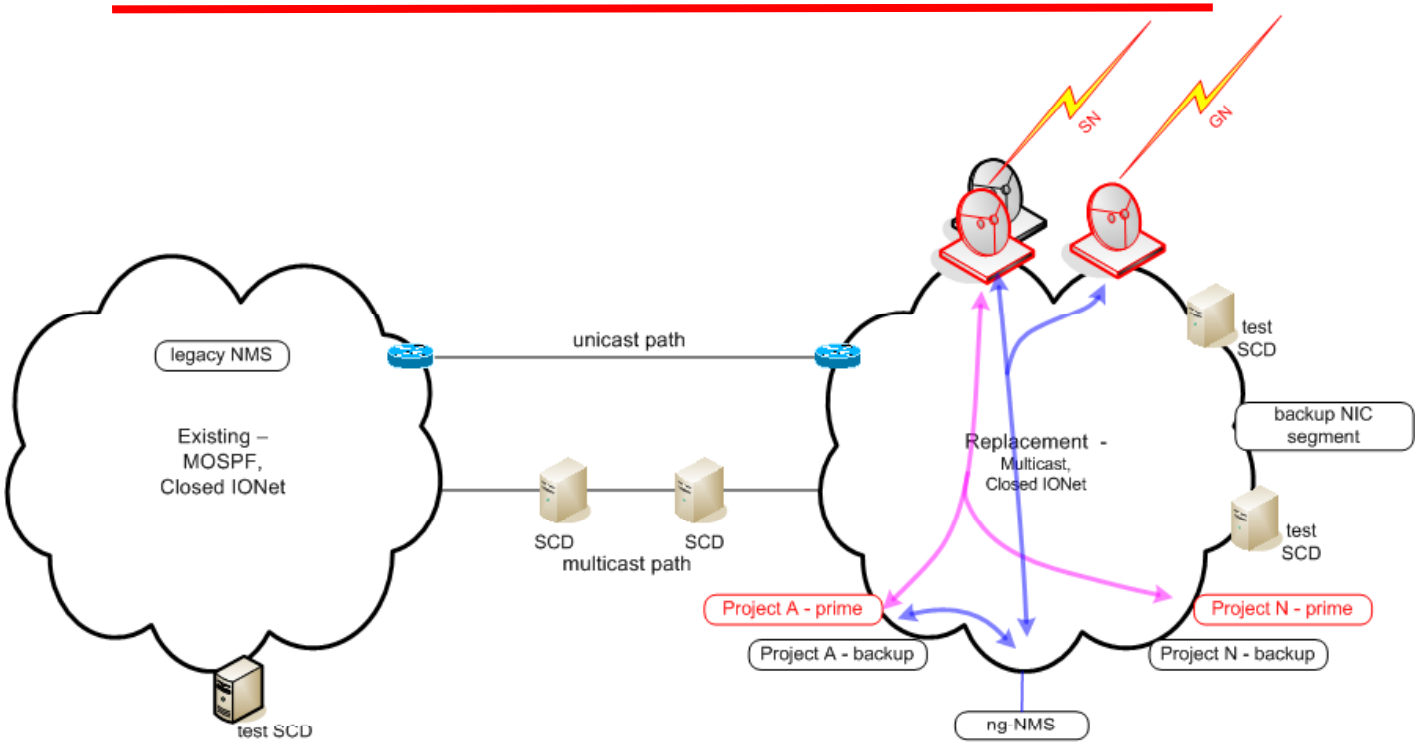

Notes:
1) Multicast flows in pink, unicast in blue.

5b. Transition (phase 2)
Transition balance of projects & infrastructure
deltas in red

Goddard Space Flight Center

Implementation & Transition Approach (cont.) – Phase 6. Decommissioning of Legacy Network

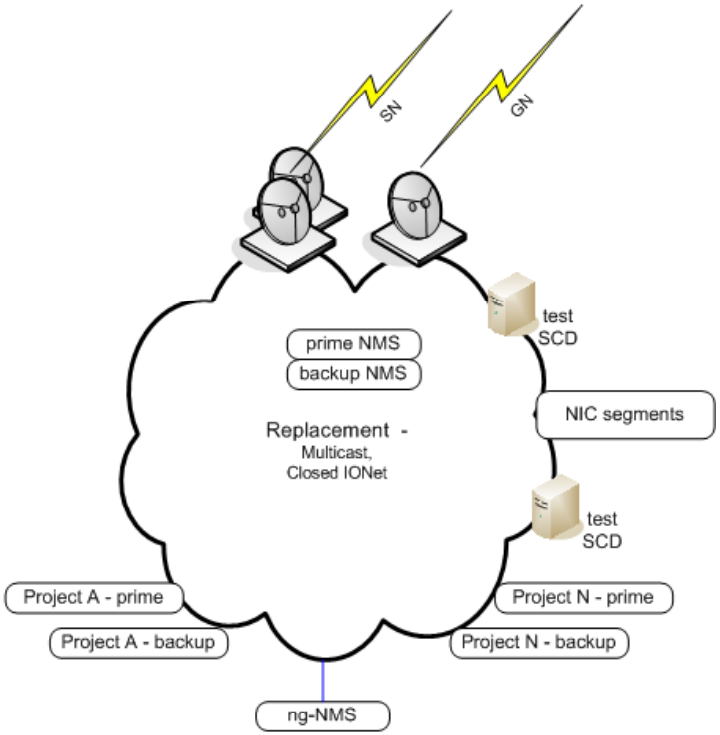

6. Decomm Legacy Network

deltas in red

Goddard Space Flight Center

NRRP Pilot Program Approach

- Development and Deployment of Pilot Program
  - A pilot program will occur following the successful implementation of the NRRP parallel network
  - The pilot program will include multicast/unicast data flows from the legacy network to the new network as well as data flows solely within the new network
  - Evaluation of the success of the pilot program will be based on performance under nominal conditions
  - A test plan for the pilot program will be developed based on the overall physical and logical design of the network, and included in the NRRP Transition Plan
  - The results of the pilot program testing will be documented and reviewed before the full scale transition of the NRRP

Section 6. Testing

Goddard Space Flight Center

Validation of Network Devices

- Validation of the routers and switches recommended for the NRRP detailed design was conducted using the approach defined in the *Equipment Assessment and Recommendation for the NRRP (document)*
- The baseline lab configuration built for the assessment encompassed:
  - The three device classifications applicable to the NRRP: Access, Distribution, Core
  - SCDs
  - The Spirent TestCenter

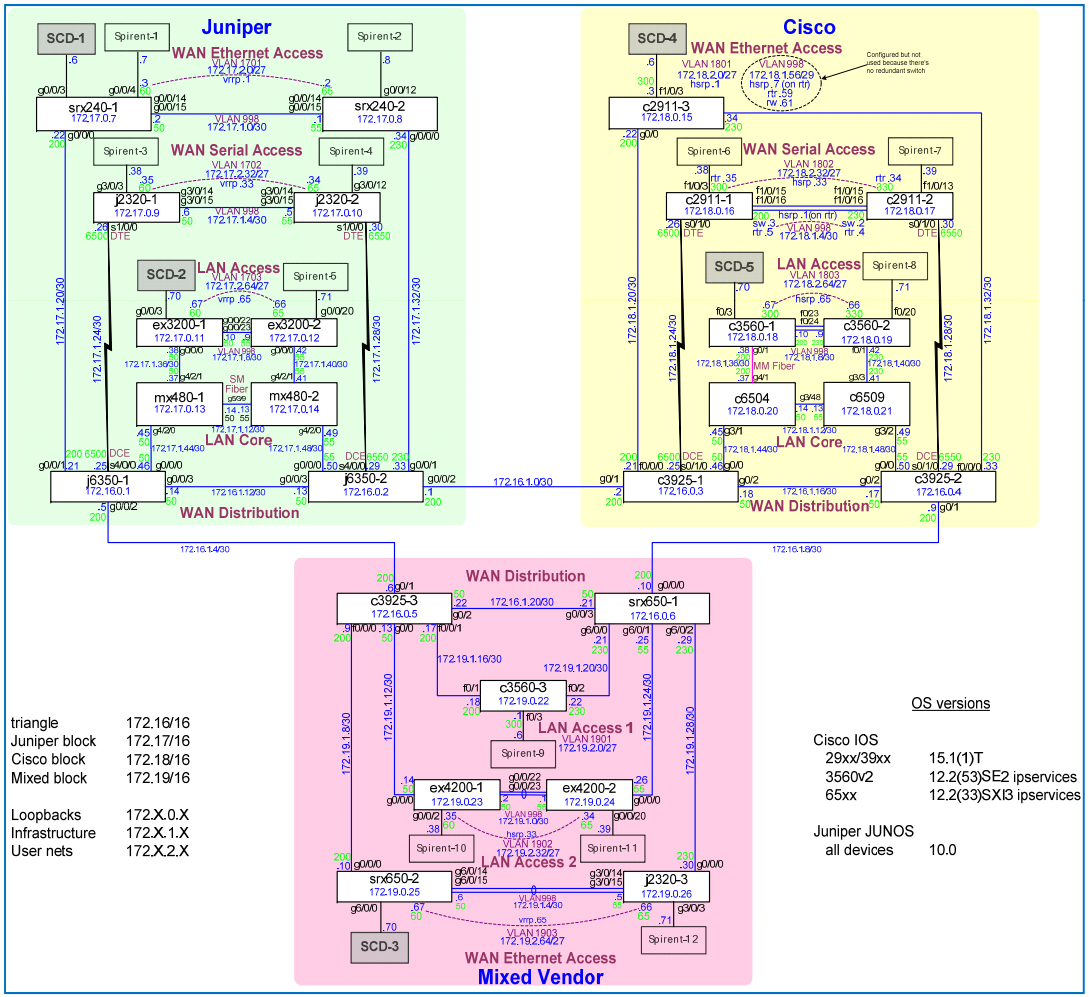

Baseline Lab Configuration for the Assessment of Network Devices (Phase 1 Testing)

Goddard Space Flight Center

Validation of the Detailed Design for the NRRP Parallel Network

- Testing of the detailed design for the NRRP Parallel Network was conducted to verify the expected behavior of unicast and multicast traffic flows

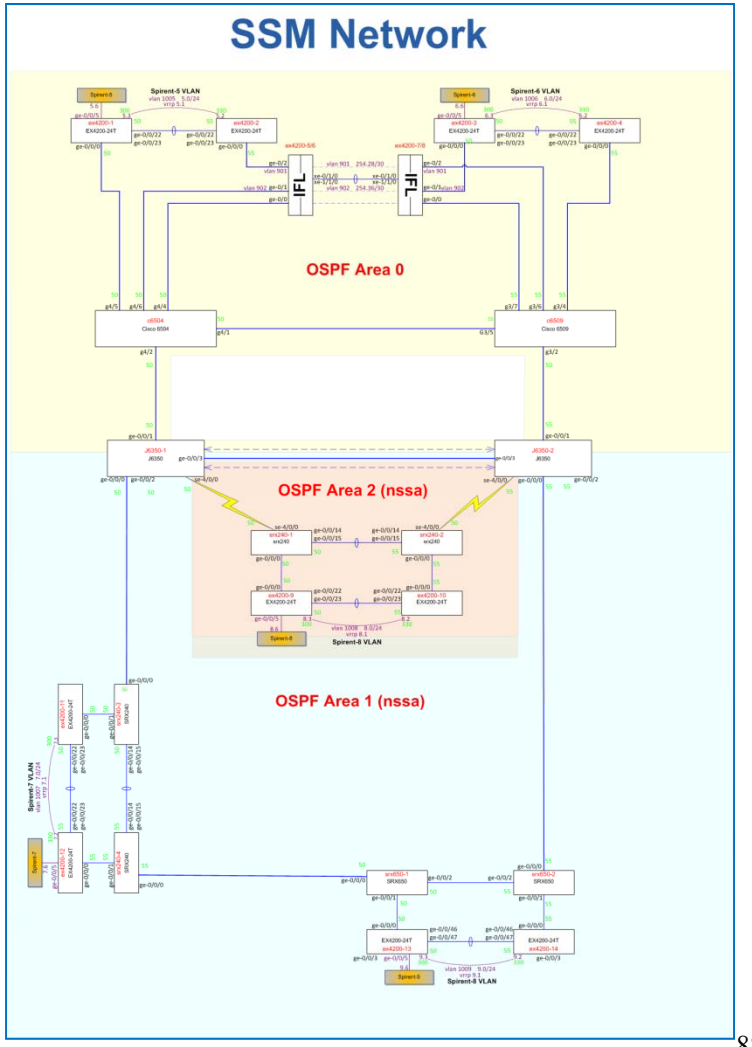

Baseline Lab Configuration for Testing the Detailed Design for the NRRP Parallel Network (Phase 2a Testing)

Goddard Space Flight Center

Verification of the NRRP Transition Approach

- Testing of the NRRP Transition approach was conducted to:
  - Verify expected unicast behavior between the legacy and new networks
  - Verify expected multicast behavior between the legacy and new networks

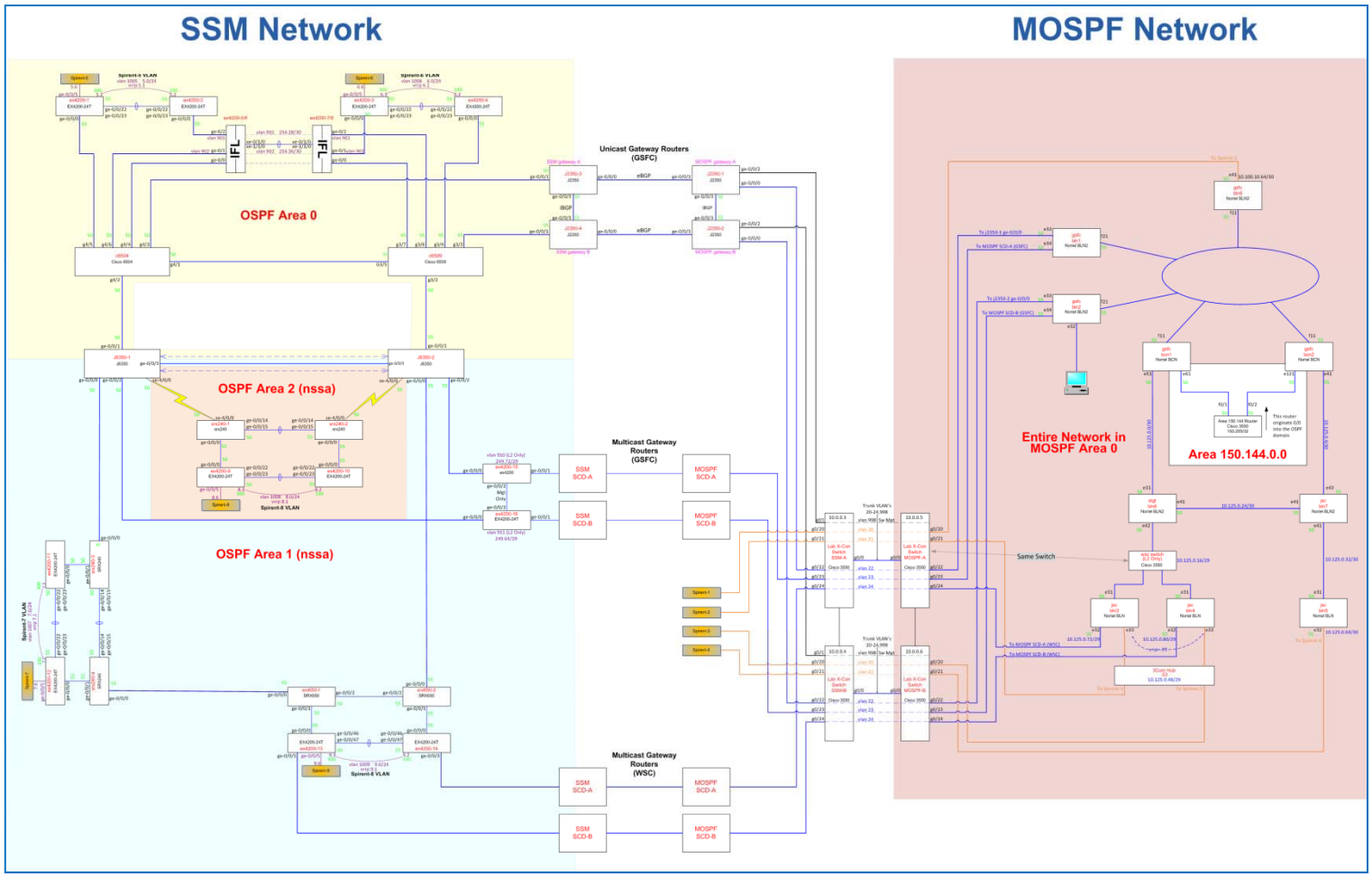

Baseline Lab Configuration for Testing the NRRP Transition Approach (Phase 2b Testing)

Goddard Space Flight Center

APPENDICES

	Slides
Appendix A: Acronyms and Abbreviations	91 - 92

Goddard Space Flight Center

Appendix A: Acronyms and Abbreviations

ACE	Advanced Composition Explorer
AIM	Aeronomy of Ice in the Mesosphere
ALOS	Advanced Land Observing Satellite
ATO	Authorization To Operate
C&A	Certification and Accreditation
CCB	Change Control Board
CDR	Critical Design Review
CHAMP	Challenging Mini-Satellite Payload for Geo-scientific Research and applications program
CM	Configuration Management
C/NOFS	Communication/Navigation Outage Forecasting System
COTR	Contracting Office Technical Representative
COTS	Commercial Off The Shelf
CSR	Communications Service Request
CSTL	Communications, Standards, and Technology Lab
EA	Enterprise Architecture
ECC	Emergency Control Center
EO-1	Earth Observing-1
FDDI	Fiber Distributed Data Interface
FDF	Flight Dynamics Facility
FISMA	Federal Information Security Management Act
FY	Fiscal Year
GALEX	Galaxy Evolution Explorer
GCC	Goddard Comm Control
GOES	Geostationary Operational Environmental Satellite
GP-B	Gravity Probe-B
GPM	Global Precipitation Measurement
GRACE	Gravity Recovery and Climate Experiment
GSFC	Goddard Space Flight Center – Greenbelt, MD
GWAC	Government-Wide Acquisition Contract
HEX	High-Energy X-ray
HST	Hubble Space Telescope
HTV	H-II Transfer Vehicle

HVAC	Heating, Ventilation, Air Conditioning
IBEX	Interstellar Boundary Explorer
IDS	Intrusion Detection System
IETF	Internet Engineering Task Force
IGMP	Internet Group Membership Protocol
IONet	Internet Protocol Operational Network
ISS	International Space Station
IT	Information Technology
ITCD	Information Technology and Communications Directorate
ITMRA	Information Technology Management Reform Act
JAXA	Japan Aerospace Exploration Agency
JSC	Johnson Space Flight Center – Houston, TX
KPP	Key Performance Parameter
KSC	Kennedy Space Flight Center – Cape Canaveral, FL
LDBP / ULDBP	Long Duration Balloon Project/
LDP	Label Distribution Protocol
LSAT	Landsat(ellite)
MDM	Mux-DeMux
MOSPF	Multicast Open Shortest Path First
MOST	Mission Operations Security Team (NISN/NASCOM)
MPLS	Multiple Data Label Switching
MSFC	Marshall Space Flight Center – Huntsville, AL
MSR	Monthly Service Review
N/A	Not Applicable
NASA	National Aeronautics and Space Administration
NASCOM	NASA Communications (Network)
NISN	NASA Integrated Services Network (Mission)
NMS	Network Management System
NNSG	NISN Network Scheduling Group
NOAA	National Oceanographic and Atmospheric Administration – Suitland, MD
NOMC	(NISN) Network Operations Management Center - GSFC

Goddard Space Flight Center

Appendix A: Acronyms and Abbreviations (cont.)

NPR	NASA Procedural Requirement
NRO	National Reconnaissance Office - Colorado Springs, CO
NRRP	Nortel Router Replacement Project
NSD	NISN Services Document
NSG	Network Support Group
NSR	Network Service Request
ODC	Other Direct Costs
ORR	Operational Readiness Review
OSPF	Open Shortest Path First
PCR	Post-Completion Review
PDR	Preliminary Design Review
PMP	Project Management Plan
POA&M	Plan Of Action and Milestones
POES	Polar Operational Environmental Satellite
RADIUS	Remote Access Dial-In User Service
RFQ	Request For Quotation
RF SOC	Radio Frequency - Simulations Operations Center
RID	Review Item Disposition
RIFCA	Redundant Inertial Flight Control Assembly
RXTE	Rossi X-ray Timing Explorer
SAFB	Schriever Air Force Base – Colorado Springs, CO
SEWP	Solutions for Enterprise-Wide Procurement
SLA	Service Level Agreement
SNMP	Simple Network Management Protocol
SOAREX	Sub-Orbital Aerodynamic Re-entry Experiments
SOC	Simulations Operations Center
SOHO	Solar & Heliospheric Observatory
SOP	Standard Operating Procedure
SORCE	Solar Radiation and Climate Experiment
SP&M	Special Projects and Missions
SPTR-2	South Pole TDRSS Relay
SRB	Standing Review Board
SSH	Secure Shell
STGT	Second TDRSS Ground Terminal – White Sands Complex, NM

STS	Shuttle Transportation System
SubTec	Suborbital Technology Experiment Carrier
SWIFT	Swift Gamma Ray Burst Explosion
TBD	To Be Determined
TDRS	Tracking and Data Relay Satellite
TDRSS	Tracking and Data Relay Satellite System
THEMIS	Time History of Events and Macroscale Interactions during Substorms
TRMM	Tropical Rainfall Measuring Mission
TRR	Technical Readiness Review
UAV	Unmanned Aerial Vehicles
VAFB	Vandenberg Air Force Base -
WAN	Wide Area Network
WBS	Work Breakdown Structure
WFF	Wallops Flight Facility – Wallops Island, VA
WIND	Solar Wind Observer
WISE	Wide-field Infrared Survey Explorer
WMAP	Wilkinson Microwave Anisotropy Probe
WSGT	White Sands Ground Terminal – NM

Goddard Space Flight Center

Change History Log

Revision	Effective Date	Description of Changes
Baseline	12/14/10	Initial Release
1.1	12/16/10	Site drawings updated
1.2	03/28/2011	The following drawings were updated in version 1.2: GSFC core racks; JSC; JSC racks; WSGT; WSGT racks; STGT; STGT racks; KSC racks; MSFC rack; Cap College rack; NOAA rack; SAFB; SAFB rack; WFF; WFF racks