SGSS SYSTEM OVERVIEW

30 March 2011

Al Vernacchio, Program Manager

Jim Clapsadle, Deputy Ground Segment Manager

Purpose of Presentation

- **To provide insight into the SGSS:**
  - What is SGSS?
  - How will it impact customers?
  - How is it different from the existing SN ground segment?
  - What are the major schedule milestones?
  - How will we transition from the existing SN ground segment to the SGSS?

- **Answer any questions**

SGSS Overview

- The mission of the Space Network Ground Segment Sustainment (SGSS) is to:
  - Implement a flexible and extensible ground segment
  - Maintain the high level of service quality and reliability
  - Accommodate new users and capabilities
  - Reduce the effort required to operate and maintain the system
- SGSS will meet this mission by implementing a modern communication system based on open standards
  - Should not require significant additional technology development
  - Intend to leverage industry standards.

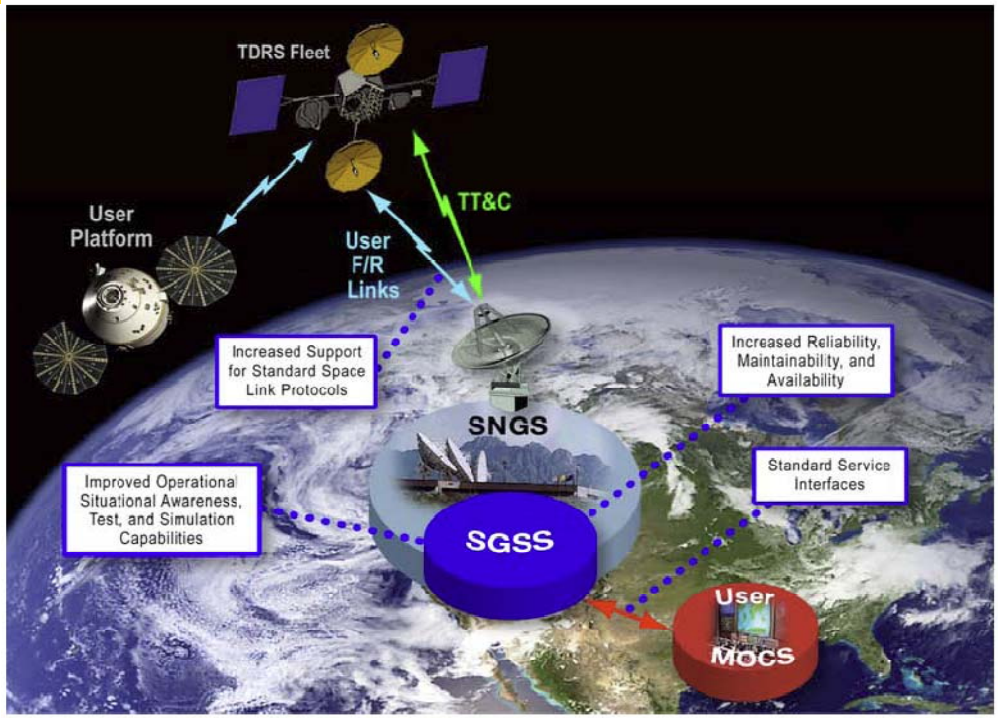

- SGSS will
  - Modify three existing ground stations:
    - White Sands Ground Station (WSGT), the Second TDRS Ground Terminal (STGT), the Guam Remote Ground Terminal (GRGT)

Minimize Customer Impacts

- **SGSS to be compatible with legacy interfaces, services, and data formats**
  - Existing Space Network Access System (SNAS) scheduling interfaces will be maintained
    - New scheduling interface available using CCSDS formats
  - Data formats unchanged
    - Telemetry and command
    - Acquisition data
  - Data delivery services maintained
    - New data delivery services available (example, CCSDS Service Link Extension)
  - Tracking and ranging data services maintained
  - Data archive and retransmission services maintained
  - Support existing User Local Equipment (ULEs)
- **Customer Network interfaces require only minor changes (example: IP addresses, firewall rules, …)**

SGSS Project Organization

SN GROUND SEGMENT SUSTAINMENT (SGSS) PROJECT
Code 458
A. Vernacchio, Project Manager

K. Walyus, Deputy Project Manager

T. Gitlin, Deputy Project Manager - Technical

D. Jacintho, Deputy Project Manager/Resources

J. Baldwin, Secretary

PROJECT SUPPORT MANAGER
Vacant

CM/DATA MGMT – R. Roe
PROJECT SUPPORT – L. Vaughn
PLANNING & SCHEDULING – W. Ostuni

FINANCIAL MANAGER
H. Keller

FINANCIAL ANALYST – C. Dicks

CONTRACTING OFFICER
M. Edwards

CONTRACT SPEC – M. Nieves-Torres

GROUND SEGMENT MANAGER
R. Saylor

DEP GND SYS MGR – J. Clapsadle
FGM ENG – B. Twambly,
SM ENG – J.Degumbia
SGL ENG – N. Litton, R. Schellhase
DSP – M. Maher, B. Schupler,
E. Siskind
EI & USG ENG – R. Turner
ENG SUPPORT – R. Mashburn,
M. Rose
NETWORK ENG – W. Eddy
MTF MGR – E. Stattel

SYSTEMS ENGINEERING MANAGER
Vacant

DEP SYS ENG MGR – C. McGraw
SYSTEMS – T. Bensch, J. Spero, B. Lusby, T. Carrington, J. Ramirez, L. Kiser, A. Levine, J. Leibee
RISK MGMT/V&V – H. Newcomb
EXT. INTERFACES – A. Fox
SECURITY – T. Brown, J. Wharton

SOFTWARE MANAGER
Vacant

S/W ENG – F. Herman

SYSTEM INTEGRATION & TEST MANAGER
A. Foster

OPERATIONS & TRANSITION MANAGER
Vacant

OPS – M. Prior, J. Roberts, K. Harris

CHIEF SAFETY & MISSION ASSURANCE OFFICER
L. Lee

QUALITY – W. Drake, D. Laczko
RELIABILITY – G. Fisher
ON-SITE - Vacant

Prime Contractor	General Dynamics
Subcontractors	
Harris Corporation	GMV Space Systems
A.I Solutions	Lockheed Martin
RT Logic	Rincon
Qwaltec	Hammers Corporation

SNGS vs. SGSS

- **Existing SNGS includes:**
  - Analog signal distribution within sites
  - Dedicated, isolated, 2x redundant HW per satellite
    - Varying equipment complement per satellite
  - Mission data delivered through a variety of serial means, on-site interfaces, some IP
  - Managed by disparate products, manual processes
  - Obsolete equipment, much cannot be replaced
    - DEC Vax clusters, VMS OS
  - Custom application SW (Ada), tightly coupled with VMS OS
  - Support data rates up to 1.2 Gbps

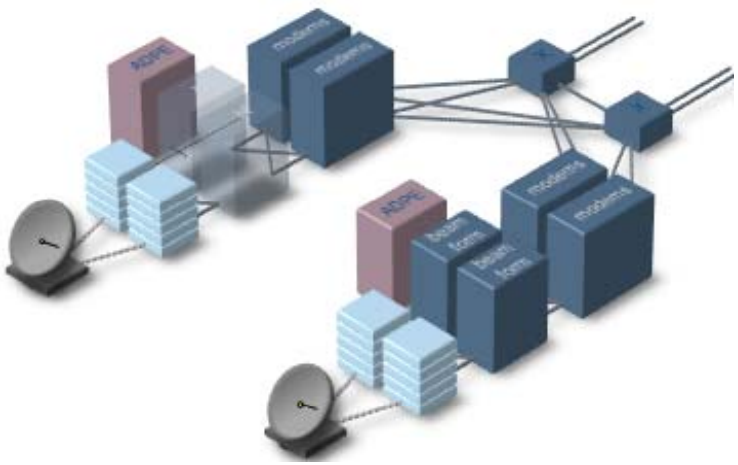

- **SGSS to include:**
  - Digital terrestrial signal distribution
    - Eliminates signal losses; increases signal distribution range and fan-out; and enables global signal combining
  - Pooled signal processing architecture
    - Optimizes resource utilization, improves availability
  - Shared-aggregate control processing
    - Clustered, commodity COTS servers, with virtualization
    - Open-standard interfaces and Service-Oriented SW architecture
  - IP LAN/WAN technology for internal system communications, and end-user data delivery
  - Modern automated Enterprise Management
  - Significant infusion of COTS application SW
  - Support data rates up to 1.5 Gbps

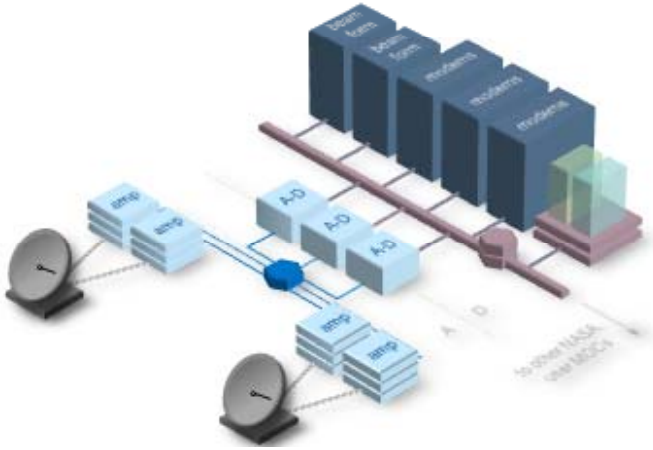

SGSS System Context Within the SN

- **SGSS replaces a major portion of the existing SN Ground Segment**
- **The SGSS system will be designed to function within a context characterized by existing SNGS-internal and external physical and functional interfaces**

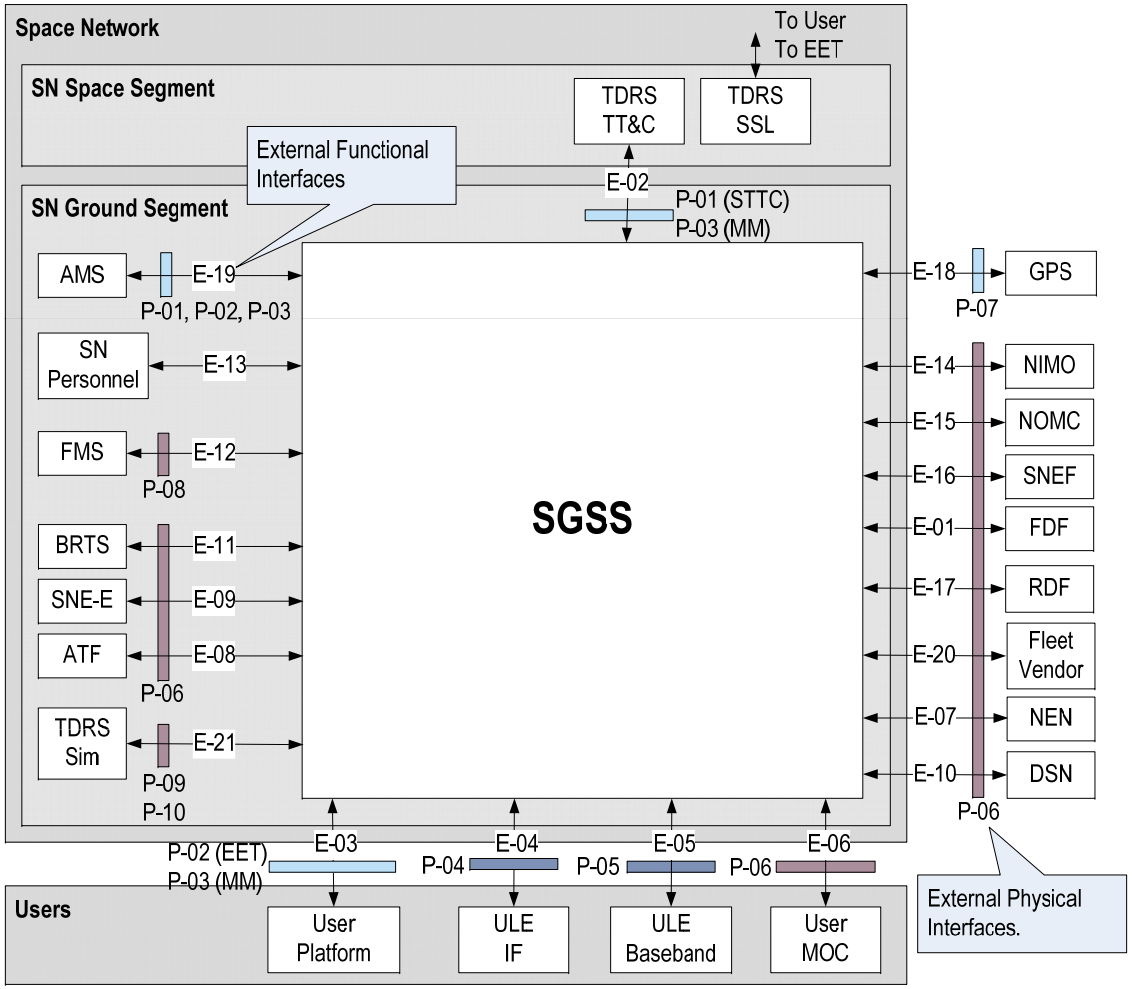

SGSS System Architecture

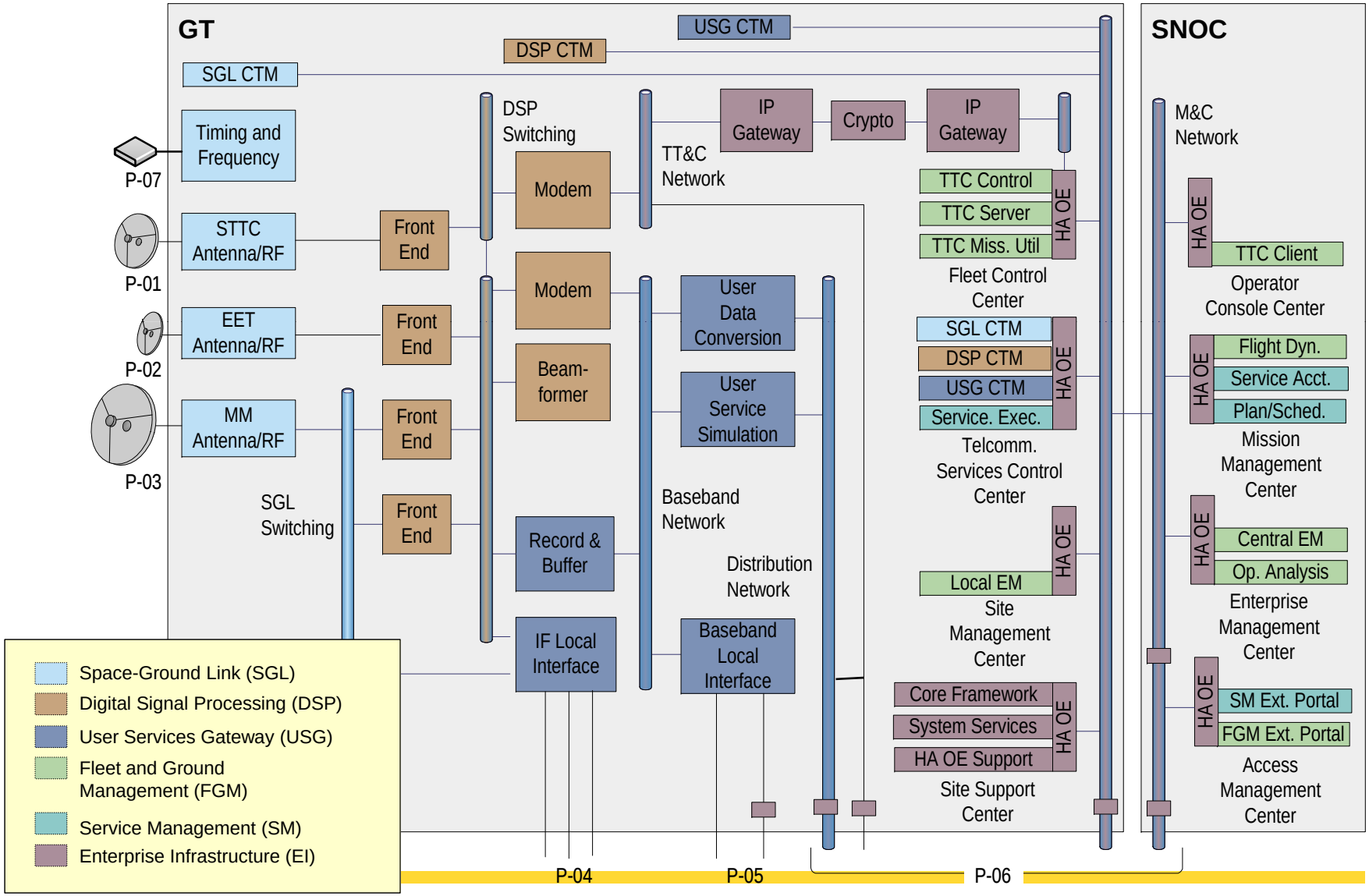

SGSS System Functional Summary

Space to Ground Link (SGL) Function:
- Forms the link between the antenna feed and the signal processing equipment, for both forward and return link
- Provide precise timing and frequency references for SGSS

Digital Signal Processing (DSP) Function:
- Convert between analog and digital signal domains (both directions)
- Modulates/demodulates user waveform/data
- High-Speed IF distribution

User Services Gateway (USG) Function:
- Implement system external bearer-plane interfaces for forward and return delivery of user information
- Data format and protocol translations
- Signal and baseband data recording and replay
- Implement user service simulation in support of end-to-end testing

Fleet and Ground Management (FGM) Function:
- Fleet Control and Management
- Ground Control and Management
- Enterprise Control and Management

Service Management (SM) Function:
- Plan, schedule, and execute user service sessions
- Monitor and report user service performance

Enterprise Infrastructure (EI) Function:
- High-availability operating environment to host science, management, and control applications system-wide
- Accessible set of common *services* which other elements leverage
- Internal system networking resources

SGSS Project Status/Schedule

- The SGSS Contract is a Cost Plus Award Fee structure awarded on 9/3/10
- An Integrated Baseline Review with General Dynamics completed on 1/27/11
- The SGSS team is currently working towards System Requirements Review
- Design and Development activities scheduled through late 2013
- Testing, Deployment, and Transition are scheduled to start late 2013 and finish in late 2015
- Final Acceptance Review is scheduled for late 2015

Phased Transition Approach

- **SGSS begins with initial hardware and software deliveries to WSC for the SGSS Network Operations Control (SNOC) at WSGT**
- **All antennas and equipment at WSGT is replaced before starting STGT**
- **STGT and GRGT antennas are upgraded in parallel**
- **TDRS Transition Strategy**
  - One antenna and TDRS at a time will be transitioned, scheduled and controlled using the new SGSS system
  - An ORR is required prior to each TDRS transition to SGSS
- **User Spacecraft / MOC Transition Strategy**
  - User Scheduling of services for existing customers will continue to appear as it does today
  - New Service Management element coordinates both transitioned and legacy resources
  - Customer support necessary for transition and verification for scheduling, command, telemetry, tracking, and ranging services
- **Final Acceptance**
  - Once Testing and Transition of all antennas is complete, final acceptance shall occur

SGSS Commitment

- Communicate project status and issues to management-level customer contacts and solicit feedback
- Communicate incorporation of customer feedback
- Periodic Customer Interface meetings between the SGSS Project and the customer community
- Ensure stakeholder needs are incorporated into the SGSS baseline
- Coordinate requests from GD for customer involvement to review of key SGSS documents and products
- Ensure customers experience a smooth transition to SGSS

Support for SGSS Project

- **Requests of Network Integration and Management Office (via Network Director)**
  - Provide SGSS project support for discussion of requirements and future roles for NIMO
  - Identify SN customers, POCs, and assist with customer coordination
  - Provide insight to new and existing customers during development of SGSS
  - Support coordination with customers for testing and transition

Backup Slides

Acronym List

Acronym	Definition
ACU	Antenna Control Unit
ADC	Analog to Digital Converter
AMS	Antenna Mechanical System
ATF	Australian TDRSS Facility
BPGT	Blossom Point Ground Terminal
BRTS	Bilateration Ranging Transponder System
CCSDS	Consultative Committee for Space Data Systems
CDRL	Contract Deliverable Requirements List
CM	Configuration Management
CMD	Command
COTS	Commercial Off-the-Shelf
CTM	Control, Test and Monitor
DAC	Digital to Analog Converter
DMZ	De-Militarized Zone
DNS	Domain Name Server
DSN	Deep Space Network
DSP	Digital Signal Processor
EET	End-to-End Test
EI	Enterprise Infrastructure
EM	Enterprise Management
FAR	Final Acceptance Review
FDF	Flight Dynamics Facility
FGM	Fleet and Ground Management
FMS	Facility Management System
FWD	Forward
GD & GDC4S	General Dynamics
GFE	Government Furnished Equipment
GPS	Global Positioning System
GRGT	Guam Remote Ground Terminal
GS	Ground System
GSFC	Goddard Space Flight Center

Acronym	Definition
GT	Ground Terminal
HAOE	High Availability Operating Environment
H/W or HW	Hardware
IDS	Intrusion Detection System
IF	Intermediate Frequency
IP	Internet Protocol
LAN	Local Area Network
LNA	Low Noise Amplifier
M&C	Management and Control
MAIP	Mission Assurrance Implementation Plan
MM	Main Mission (Antenna)
MOC	Mission Operations Center
MT	Maintenance and Training
MTF	Maintenance and Training Facility
NASA	National Aeronautics and Space Administration
NCCDS	Network Control Center Data System
NEN	Near Earth Network
NIMO	Network Integration Management Office
NISN	NASA Integrated Services Network
NOMC	NISN Operations Management Center
O&M	Operations and Maintenance
OD	Orbit Determination
Ops.	Operations
ORR	Operations Readiness Review
OS	Operating System
POC	Points of Contact
POL	Polarity
PSR	Pre-Ship Review
RDF	Remote Development Facility
RF	Radio Frequency
RTN	Return

Acronym List

Acronym	Definition
SAN	Storage Area Network
SBT	Sub-Band Tuner
SDE	Software Development Environment
SE	Systems Engineering
SEMP	Systems Engineering Management Plan
SGL	Space-Ground Link
SGSS	Space Network Ground Segment Sustainment
SIR	System Integration Review
SM	Service Management
SN	Space Network
SNE	Space Network Expansion
SNE-E	Space Network Expansion East
SNEF	Space Network Engineering Facility
SNGS	Space Network Ground Segment
SNOC	Space Network Operations Center
SOW	Statement of Work
SP&M	Special Project and Missions
SSL	Space-to-Space Link
STGT	Second TDRSS Ground Terminal
STTC	S-Band Telemetry, Tracking, and Command
S/W or SW	Software
TT&C	Tracking, Telemetry, and Command
TCP	Transmission Control Protocol
TDRS	Tracking and Data Relay Satellite
TER	Test Entrance Review
TLM	Telemetry
TRR	Test Readiness Review
UDC	User Data Conversion Subsystem
ULE	User Local Equipment
USG	User Services Gateway
USS	User Service Simulation

Acronym	Definition
VM	Virtual Machine
WAN	Wide Area Network
WSGT	White Sands Ground Terminal