DFRC NISN Upgrade

September 2002

Michele Mascari
301-805-3214
michele.mascari@cscoconline.com

Agenda

- Purpose
- Approach
- NISN Actions

Purpose

- Provide additional bandwidth to enable DFRC to support a 1024 kbps Shuttle recorder dump and a 192 kbps real time flow simultaneously.
- Comments
  - IP commanding not yet accepted, therefore legacy 224 kbps data channels
    must remain.
  - Physical diversity to DFRC is not available

Proposed Modifications

- Consolidate non-IP data services onto one of the existing two GSFC-DFRC T1s
- Reconfigure the other existing DFRC-GSFC T1 to have one IP data channel

Current DFRC Comm

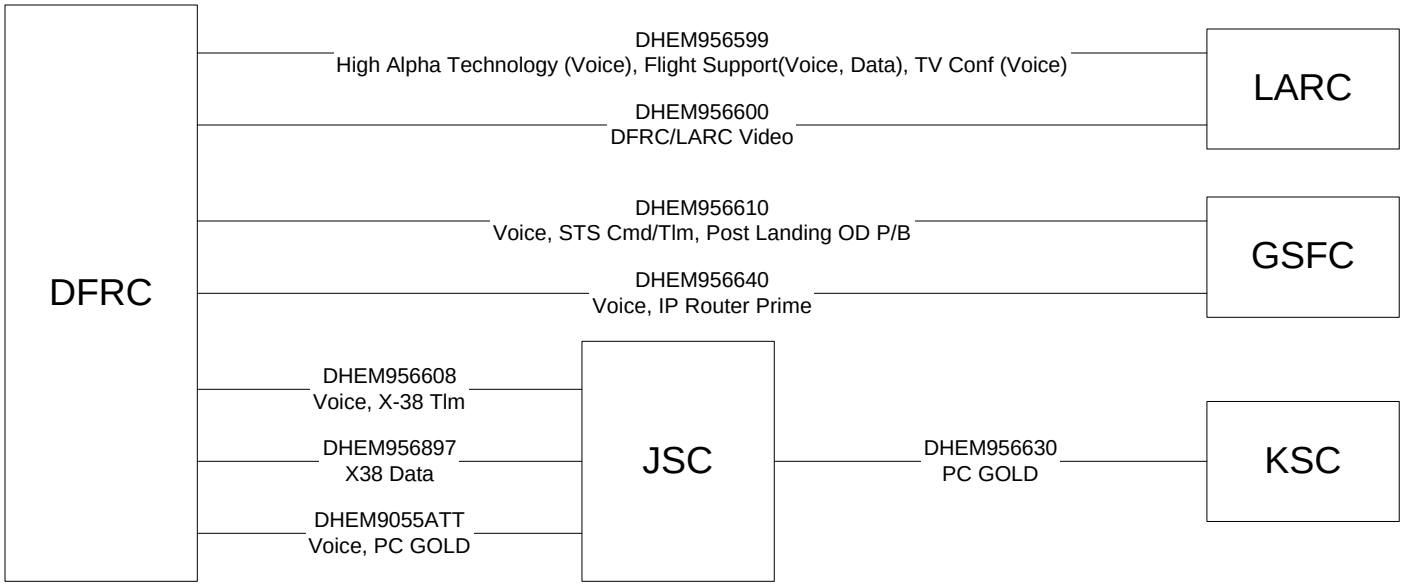

Current T1 Configuration

From GSFC		From JSC		
DHEM956610	DHEM956640	DHEM9055ATT	DHEM956608	DHEM956897
32 kbps Voice	24 kbps Voice	32 kbps Voice	32 kbps Voice	1.536 Mbps X-38
24 kbps Voice	24 kbps Voice	24 kbps Voice	24 kbps Voice	
24 kbps Voice	24 kbps Voice	24 kbps Voice	24 kbps Voice	
24 kbps Voice	640 kbps IP Router (Prime) 0 kbps IP Router (Backup)	24 kbps Voice	24 kbps Voice	
24 kbps Voice		24 kbps Voice	24 kbps Voice	
24 kbps Voice		24 kbps Voice	24 kbps Voice	
24 kbps Voice		24 kbps Voice	24 kbps Voice	
24 kbps Voice		24 kbps Voice	24 kbps Voice	
24 kbps Voice		24 kbps Voice	24 kbps Voice	
24 kbps Voice		384 kbps PC GOLD	24 kbps Voice	
24 kbps Voice			24 kbps Voice	
24 kbps Voice			24 kbps Voice	
24 kbps Voice			24 kbps Voice	
64 kbps TRK			24 kbps Voice	
224 kbps Legacy			24 kbps Voice	
224 kbps Legacy			24 kbps Voice	
			24 kbps Voice	
			24 kbps Voice	
			516 kbps X-38 TLM	

GSFC/DFRC Configuration (New)

DHEM956610	DHEM956640
32 kbps Voice	1.504 Mbps IP Data Channel
24 kbps Voice	
24 kbps Voice	
24 kbps Voice	
24 kbps Voice	
24 kbps Voice	
24 kbps Voice	
24 kbps Voice	
24 kbps Voice	
24 kbps Voice	
24 kbps Voice	
24 kbps Voice	
24 kbps Voice	
24 kbps Voice	
24 kbps Voice	
24 kbps Voice	
24 kbps Voice	
64 kbps TRK	
224 kbps Legacy	
224 kbps Legacy	

NISN Actions

- Reallocate services on existing GSFC-DFRC T1s:
  - Clear T1 muxes (GSFC Node 64 and DFRC Node 145) by moving 3 voice channels from DHEM956640 to DHEM956610:Cooling Net, Purge Net, Mission Comm O/W
  - Relocate following channel cards in GSFC mux 64 to other GSFC muxes interfacing to GSFC switch 60:
    - PLLJ956881 DSN Track to Cambridge (voice)
    - PLLJ956882 DSN Coord to Cambridge (voice)
    - PLLJ956868 AXAF ops to Cambridge (voice)
    - DZEJ-956862 256 kbps to NMC, Silver Spring, MD
  - Reconfigure 956640 as one data channel.

Site Actions

- GSFC
  - Reconfigure voice channels as required
  - Reconfigure other DACS services as required
- DFRC
  - Reconfigure voice channels as required
  - No changes required in DFRC ATF-1 site (Building 4982)

Schedule

- Complete week of September 9
- Data flows scheduled for September 12