To: Distribution

From CSOC Documentation

Date: June 5, 2003

Subject: Corrected Copy of DCN 004 to the 450-601-NOSP/Space Shuttle

Attached are the corrected pages 1-31 and 1-32 to the 450-601-NOSP/Space Shuttle DCN 004 that was distributed in June 2003. Please discard page 1-31 of the original DCN 004 and insert the page included in this corrected copy.

DATE: June 2003

TO: Distribution

FROM: James A. Bangerter, NASA Mission Commitment Manager/Code 451

SUBJECT: DCN 004 to the 450-601-NOSP/Space Shuttle

Attached is Documentation Change Notice (DCN) 004 to the *Network Operations Support Plan for the Space Shuttle Program*, 450-601-NOSP/Space Shuttle (supersedes 601/Space Shuttle), dated October 2001. This DCN affects changes to the Preface, Table of Contents, Section 1 and the Distribution List. This DCN includes the new Tone Keying Failure (UHF) and Shuttle Forward Link (32/72 kbps Commands) Data to KSC/RPS procedures and updates to Ground Communications Interface, Space Shuttle Telemetry Data Flow, Real-time OD Telemetry Data via the JSC OD, and MIL/PDL Prelaunch/Launch Configuration diagrams. Please incorporate these pages and destroy any superseded pages.

5/30/03

For James A. Bangerter Date
NASA Mission Commitment Manager/Code 451

DATE: December 2002

TO: Distribution

FROM: Ted C. Sobchak, NASA Network Director/Code 451

SUBJECT: DCN 003 to the 450-601-NOSP/Space Shuttle

Attached is Documentation Change Notice (DCN) 003 to the *Network Operations Support Plan for the Space Shuttle Program*, 450-601-NOSP/Space Shuttle (supersedes 601/Space Shuttle), dated October 2001. This DCN affects changes to Sections 1, 2, 3, 4, 7, and the Table of Contents. Please incorporate these pages and destroy any previously issued pages.

12/19/02

Ted C. Sobchak Date
NASA Network Director/Code 451

DATE: December 2002

TO: Distribution

FROM: Ted C. Sobchak, NASA Network Director/Code 451

SUBJECT: DCN 003 to the 450-601-NOSP/Space Shuttle

Attached is Documentation Change Notice (DCN) 003 to the *Network Operations Support Plan for the Space Shuttle Program*, 450-601-NOSP/Space Shuttle (supersedes 601/Space Shuttle), dated October 2001. This DCN affects changes to Sections 1, 2, 3, 4, 7, and the Table of Contents. Please incorporate these pages and destroy any previously issued pages.

12/19/02

Ted C. Sobchak Date
NASA Network Director/Code 451

DATE: September 2002

TO: Distribution

FROM: Ted C. Sobchak, NASA Network Director/Code 450

SUBJECT: DCN 002 to the 450-601-NOSP/Space Shuttle

Attached is Documentation Change Notice (DCN) 002 to the *Network Operations Support Plan for the Space Shuttle Program*, 450-601-NOSP/Space Shuttle (supersedes 601/Space Shuttle), dated October 2001. This DCN affects changes to Sections 1, 3, 4, and the Table of Contents. Please incorporate these pages and destroy any previously issued pages.

09/27/2002

T. Sobchak/NASA **Date**
Human Spaceflight Network Director

DATE: October 16, 2001

TO: Distribution

FROM: Steven B. Testoff, GSFC CSOC Documentation Site Manager

SUBJECT: 450-601-NOSP/Space Shuttle

The *Network Operations Support Plan for the Space Shuttle Program*, 601/Space Shuttle (formerly 501-601/Space Shuttle), dated July 2001 is being replaced by the *Network Operations Support Plan for the Space Shuttle Program*, 450-601-NOSP/Space Shuttle (Supersedes 601/Space Shuttle), dated October 2001.

The document has been renumbered in accordance with Code 450 Configuration Control Board (CCB) directives. The Original issue of the renumbered document incorporates changes to Table 1-5, Antenna Allocations, as well as editorial changes to the Signature Page, Preface, and Change Information Page. Previously issued copies of the Network Operations Support Plan (NOSP) under different numbers (e.g., 601/Space Shuttle or 501-601/Space Shuttle) are to be discarded or disposed of in accordance with local document and data control procedures.

Additional hard copies will not be issued to replace 601/Space Shuttle distributed in July 2001. The document is available via the Document and Data Control System (DDCS) Online Library at either

http://csoc-ddcs.csoconline.com/library/doc-type/nosp.asp

or

http://csoc-ddcs.csoconline.com/library/project/sshuttle.asp

Steven B. Testoff/AS&T
GSFC CSOC Documentation Site Manager
CSOC/GSFC

DATE: March 2002

TO: Distribution

FROM: Ted C. Sobchak, NASA Network Director/Code 450

SUBJECT: DCN 001 to the 450-601-NOSP/Space Shuttle

Attached is Documentation Change Notice (DCN) 001 to the *Network Operations Support Plan for the Space Shuttle Program*, 450-601-NOSP/Space Shuttle (formerly 601/Space Shuttle), dated October 2001. This DCN affects changes to Sections 1, 11, and 12. Please incorporate these pages and destroy any previously issued pages.

Please note that during October 2001, the 601/Space Shuttle was replaced by the 450-601-NOSP/Space Shuttle, dated October 2001. At that time, due to cost, the decision was made not to distribute a new document because it had been renumbered. This DCN carries the 450-601-NOSP/Space Shuttle number in the footer. It should be inserted in either the 601/Space Shuttle or the 450-601-NOSP/Space Shuttle.

Ted C. Sobchak Date

NASA Network Director/Code 450

450-601-NOSP/Space Shuttle
(Supersedes 601/Space Shuttle)

MISSION SERVICES PROGRAM OFFICE

Network Operations Support Plan for the Space Shuttle Program

Original

October 2001

National Aeronautics and
Space Administration

Goddard Space Flight Center
Greenbelt, Maryland

CHECK THE CSOC DOCUMENT AND DATA CONTROL SYSTEM MASTER LIST AT:
http://csoc-ddcs.csoconline.com/masterlist
PRIOR TO USE TO VERIFY THAT THIS IS THE CORRECT VERSION

Network Operations Support Plan for the Space Shuttle Program

October 2001

Prepared by:

07/03/01

Howard Washington
Mission Project Analyst
Honeywell Technology Solutions, Inc.
Goddard Space Flight Center

Date

Approved by:

07/03/01

Bruce Schneck
Customer Service Representative - Human Spaceflight
Honeywell Technology Solutions, Inc.
Goddard Space Flight Center

Date

Approved by:

7/3/01

Ted Sobchak
NASA Network Director
Code 450
Goddard Space Flight Center

Date

The contents have been revised and supersede the *Network Operations Support Plan for the Space Shuttle Program*, 601/Space Shuttle (formerly 501-601/Space Shuttle), Original dated July 2001. Discard all previously issued copies.

Goddard Space Flight Center
Greenbelt, Maryland

Preface

The purpose of this Network Operations Support Plan (NOSP) is to provide operational procedures and equipment configurations to the ground Tracking and Data Acquisition (T&DA) stations for the Space Shuttle. The provisions in this document take precedence over and supersede configurations and procedures in 601/Space Shuttle, Original version, dated July 2001, and all Administrative Message System (AMS) Documentation Change Notices (DCN) issued against it.

This document is under the configuration management of the Mission Services Program Office Space Flight Configuration Control Board. All changes to this document will be made by DCN or revision. Questions concerning information in this document should be transmitted to the Network Integration Center (NIC) using standard Request for Information or Clarification (RIC) procedures. General comments or questions can be addressed to:

Goddard Corporate Park
7515 Mission Drive
Lanham, MD 20706
Attn: HSF CSR (or e-mail to bruce.schneck@csoconline.com)

This NOSP will be authorized for use by Interim Support Instruction (ISI) after all supporting stations have acknowledged receipt via E-Mail to:

Earl.Daniel@Honeywell-TSI.Com

Change Information Page

List of Effective Pages	
Page Number	**Issue**
Title	Original
iii through vi	DCN 004
vii through viii	Original
ix	DCN 004
x	DCN 003
xi through xviii	Original
xix and xx	DCN 003
xxi	Original
xxii	DCN 003
xxiii	Original
xxiv	DCN 003
xxv/(xxvi blank)	DCN 001
1-1 through 1-5	Original
1-6	DCN 003
1-7 and 1-8	Original
1-9 and 1-10	DCN 003
1-11 through 1-15	Original
1-16	DCN 002
1-17 and 1-18	Original
1-19 through 1-30	DCN 003
1-31 through 1-33	DCN 004
1-34 through 1-35	Original
1-36 through 1-40	DCN 003
1-41 through 1-48	Original
1-49 through 1-62	DCN 003
1-63 through 1-64	Original
1-65 and 1-66	DCN 004
1-67 through 1-68	DCN 001
1-69 through 1-70	DCN 002
1-71 through 1-74B	DCN 004
1-75 and 1-76	DCN 002
1-77 through 1-79	Original
1-80	DCN 003
1-81 through 1-86	Original
1-87 through 1-89/(1-90 blank)	DCN 003
2-1 through 2-38	Original
2-39 through 2-40A/2-40B	DCN 003
2-41 through 2-59/(2-60 blank)	Original
3-1/(3-2 blank)	Original
3-3/(3-4 blank)	Original
3-5 through 3-15	Original
3-16	DCN 003
3-17	DCN 002
3-18 and 3-19/(3-20 blank)	Original
4-1	DCN 002
4-2 through 4-15	Original
4-16	DCN 002

Change Information Page (continued)

List of Effective Pages	
Page Number	**Issue**
4-17	Original
4-18 through 4-20	DCN 002
4-21 through 4-24	Original
4-25 and 4-26	DCN 002
4-27	Original
4-28 and 4-29	DCN 002
4-30 through 4-36	Original
4-37 and 4-38	DCN 002
4-39/(4-40 blank)	DCN 003
5-1 through 5-26	Original
6-1 through 6-17/(6-18 blank)	Original
7-1 and 7-2	DCN 003
7-3 through 7-11/(7-12 blank)	Original
8-1 through 8-35/(8-36 blank)	Original
11-1 through 11-6	Original
11-7	DCN 001
11-8 through 11-11/(11-12 blank)	Original
12-1 through 12-3/(12-4 blank)	DCN 001
14-1 through 14-16	Original
15-1/(15-2 blank)	Original
16-1 through 16-10	Original
17-1 and 17-2	Original
25-1 through 25-12	Original
26-1 and 26-2	Original
35-1/(35-2 blank)	Original
AB-1 through AB-18	Original
DL-1 through DL-3/(DL-4 blank)	DCN 004

Document History			
Document Number	**Status/Issue**	**Publication Date**	**CCR Number**
STDN No. 601/STS	Original Revision 1 Revision 2 Revision 3 Revision 4 Revision 5 Revision 6 Revision 7 (Retired)	November 1980 August 1981 December 1981 August 1983 September 1984 December 1987 January 1990 June 1991	
501-601/Space Shuttle	Original (Retired)	December 1993	
601/Space Shuttle	Original (Retired)	July 2001	
450-601-NOSP/Space Shuttle	Original DCN 001 DCN 002 DCN 003 DCN 004	October 2001 March 2002 September 2002 October 2002 June 2003	452/054 452/066 451/301 TBD CCR 451/563

DCN Control Sheet

DCN Number	Date/Time Group (AMS Only)	Month/Year	Section(s) Affected	Initials
001	printed	03/2002	1,11,12,25	TRZ
002	printed	09/2002	1,3,4,TOC	JKZ
003	printed	10/2002	TOC,1,2,3,4,7	JKZ
004	printed	06/2003	TOC,1,DL	[illegible]

Contents

Preface

Section 1. Mission Operations

1.1 Mission Description 1-1

1.1.1 General 1-1

1.1.2 Space Shuttle System 1-1

1.1.3 Abort Modes 1-5

1.1.4 Landing Sites 1-6

1.1.5 Space Shuttle Ground Communications and Tracking System 1-9

1.2 Mission Preparation 1-35

1.2.1 Minus Day Schedule 1-35

1.2.2 Launch (Terminal) Count 1-35

1.2.3 Landing Count 1-37

1.2.4 Summary of Space Network and Ground Network Anomalies Requiring Postmission Followup/Analysis Report 1-38

1.3 Station Operations 1-39

1.3.1 Station Supervisor 1-39

1.3.2 Telemetry Destination Codes 1-70

1.3.3 Command 1-71

1.3.4 Communications 1-73

1.3.5 Range Safety 1-74B

1.3.6 Meteorological Interactive Data Display System 1-78

1.4 Radio Frequency Interference 1-80

1.5 Station Configurations 1-80

Section 2. Telemetry

2.1 General 2-1

2.2 Launch and Landing Support 2-1

2.2.1 Station Support Requirements/Configurations 2-1

2.2.2 Link Description 2-1

2.2.3 Data Systems Configuration 2-8

2.2.4 Data Conditioning Subsystem (MIL/PDL) 2-8

2.2.5 Bit Synchronizers, Launch Phase (WPS) 2-11

2.2.6 Phase Shift Key Demodulator FM DL 2-13

2.2.7 Data Comm Switch (MIL/PDL only) 2-16

2.2.8 MIL Shuttle Launch Support System (SLSS) 2-25

2.2.9 Shuttle Return Link Data System (SRLDS) 2-27

2.2.10 Recorder Configuration 2-29

2.2.11 SSME Dump Data Monitoring 2-39

2.2.12 MIL Best Source Select 2-40

2.2.13 PDL Best Source Select 2-40A

2.3 Orbital Support 2-41

2.3.1 Station Support Requirements/Configuration 2-41

2.3.2 Link Description 2-41

2.3.3 Receiver Configuration 2-41

2.3.4 Data Systems Configuration 2-41

2.3.5 Delta Modulation System 2-53

2.3.6 Magnetic Tape Recorder Configuration 2-53

2.3.7 High-Speed Data Transmission 2-56

2.4 Station Playback Procedures 2-57

2.4.1 General 2-57

2.4.2 Playback Requests 2-57

2.4.3 Station Playback Procedures 2-57

2.4.4 Station Playback Recorder Configuration 2-57

2.4.5 GN Stations Space Shuttle Main Engine Dump Data Playback 2-57

Section 3. Radar

3.1 General 3-1
3.2 Launch Phase 3-1
3.3 Orbit Phase 3-1
3.4 Landing Phase 3-1
3.4.1 General 3-1
3.4.2 Landing Phase Computing Center Support 3-13
3.4.3 Landing Phase Acquisition 3-13
3.5 Tracking Coordination Voice Communications Circuit 3-14
3.6 DOD Radars 3-14
3.6.1 General 3-14
3.6.2 Phasing 3-14
3.6.3 Atmospheric Refraction Correction 3-14
3.6.4 Onsite Weather Observations/Reporting 3-15
3.6.5 Frequencies 3-16
3.6.6 Data Disposition 3-16
3.7 Wallops Island Support Procedures 3-16
3.7.1 Documentation 3-16
3.7.2 Requirements 3-16
3.7.3 Tracking Data 3-17
3.7.4 Acquisition Data 3-17
3.7.5 Support Configuration 3-17
3.7.6 Low-Speed Data Header 3-18
3.7.7 C-Band Acquisition Procedures 3-18
3.7.8 System Recorders 3-18
3.7.9 Data Disposition 3-18
3.7.10 Phasing 3-18
3.7.11 Atmospheric Refraction Correction 3-18
3.7.12 Reporting 3-18

3.8 United States Space Command ET Support 3-19
3.8.1 Launch Phase Support 3-19
3.8.2 Orbital Support 3-19

Section 4. S-band

4.1 General 4-1
4.2 Station Support 4-1
4.2.1 General 4-1
4.2.2 Launch Pad Support 4-1
4.2.3 Scheduling/Predicted Coverage 4-1
4.2.4 Link Description and MOD Indices 4-1
4.2.5 Support Configuration 4-12
4.3 Operational Support Procedures 4-13
4.3.1 Equipment Prepass Checklist 4-13
4.3.2 Acquisition Sources and Procedures 4-17
4.3.3 MIL/PDL/WPS Systems Configuration and Operations for Space Shuttle Launch and Ascent 4-25
4.3.4 MIL/PDL Configuration and Operations for KSC Landings 4-28
4.3.5 Contingency Procedures 4-28
4.4 Modulation on Technique Acquisition Sources and Procedures (MIL, PDL, and WPS) 4-34
4.4.1 Sources 4-34
4.4.2 Procedures 4-35
4.5 Tracking System Requirements (S-band Tracking Processor System) 4-37
4.5.1 Real-time Support 4-37
4.5.2 Playback Support 4-39

Section 5. Station Computer Systems

5.1 Required Documentation 5-1

5.2 Remote Site Data Processor Requirements 5-1

5.2.1 Telemetry Processing - PM Operational DL 5-1

5.2.2 FM Operational DL Support Requirements 5-1

5.2.3 MIL Site Status Message 5-4

5.2.4 Remote Control Interface (MIL/PDL) 5-4

5.3 NISN Blocker/Deblocker (MIL/PDL only) 5-5

5.3.1 General 5-5

5.3.2 Blocker 5-5

5.3.3 Deblocker 5-5

5.4 MIL Blocker/Deblocker Setup Files for Launch 5-6

5.5 MIL Blocker/Deblocker Setup Parameters for Launch 5-6

5.6 PDL Blocker/Deblocker Setup Files for Launch 5-8

5.7 MIL Orbit Configuration Setup Files 5-9

5.8 Blockers/Deblockers for MIL and PDL 5-10

5.9 MIL Multiplexer 5-11

5.10 Telemetry Blockers 5-14

5.10.1 Communications Data Formatter Deblocker 5-14

5.10.2 Operations 5-14

5.10.3 Programmable Telemetry Processor Deblocker 5-14

5.10.4 Operations 5-14

5.11 Wallops Front End Processor 5-20

5.11.1 General 5-20

5.11.2 Input 5-20

5.11.3 Initialization Procedures 5-20

5.11.4 System Description 5-20

5.11.5 Operations 5-21

Section 6. Command

6.1 General 6-1

6.1.1 Supporting Stations 6-1

6.1.2 Applicable Documentation 6-1

6.1.3 Radio Frequency Parameters 6-1

6.2 SFL System Description (MIL Only) 6-2

6.2.1 Introduction 6-2

6.2.2 Input Data Modes 6-2

6.2.3 SFL/CMD Verification 6-2

6.3 SFL Initialization 6-4

6.4 Type III Command Histories 6-4

6.5 CSS 6-5

6.6 NCPS System Description 6-6

6.6.1 General 6-6

6.6.2 NCPS Description 6-10

6.6.3 Operational Configuration Display Area 6-10

6.6.4 Menu Display Area 6-12

Section 7. Flight Dynamics Facility

7.1 Introduction 7-1

7.2 Operational Communications 7-1

7.2.1 Introduction 7-1

7.2.2 Operational Systems 7-1

7.3 Mission Participation 7-1

7.3.1 Planning Phase 7-1

7.3.2 Planning Data 7-1

7.3.3 Terminal Count Support 7-2

7.3.4 Displays 7-2

7.3.5 Data Validation 7-2

7.3.6 Fault Isolation 7-2

7.4 Acquisition Data 7-2
7.4.1 General 7-2
7.4.2 Premission Phase 7-2
7.4.3 Mission Phase Acquisition Data 7-3
7.5 C-Band and S-Band Station Antenna Identification 7-4
7.6 GSFC Bypass Acquisition Data Plan 7-4

Section 8. Communications

8.1 General 8-1
8.1.1 Introduction 8-1
8.1.2 NISN Systems 8-1
8.1.3 NISN Data Systems 8-1
8.1.4 Voice Systems 8-2
8.1.5 Tracking Data Systems 8-8
8.1.6 Video System 8-8
8.1.7 Meteorological Interactive Data Display System 8-8
8.1.8 Transoceanic Abort Landing Communications 8-10
8.2 Operations 8-10
8.2.1 General 8-10
8.2.2 Documentation 8-10
8.2.3 NISN Communications Manager 8-12
8.2.4 NISN Network Scheduling Group 8-12
8.2.5 Operations Tests 8-12
8.2.6 Communications Configurations 8-12
8.2.7 Operational Failures or Deficiencies 8-12
8.2.8 IP Network 8-13
8.2.9 Circuit Description 8-25

Section 11. Data Management

11.1 General 11-1
11.2 Data Requirements and Disposition 11-1
11.2.1 Testing 11-1
11.2.2 Launch Through Mission Termination 11-1
11.2.3 DOD Data Disposition 11-1
11.2.4 Postmission Data Requirements and Disposition 11-1
11.3 Data Requests 11-2
11.4 Data Retention 11-2
11.5 Data Labels 11-3
11.6 Shipping 11-3
11.6.1 General 11-3
11.6.2 STDN Stations Shipments 11-3
11.6.3 Shipping Addresses 11-3
11.7 Tape Numbering 11-4
11.8 Data Identification 11-5
11.9 Space Shuttle Private Conversations 11-5

Section 12. Station Communications Support

12.1 General 12-1
12.2 Operating Procedures 12-1
12.2.1 General 12-1
12.2.2 Voice Recorder Configuration 12-1

Section 14. Air-to-Ground Communications

14.1 General 14-1
14.2 Voice Communication Modes 14-1
14.2.1 Space Shuttle Definition 14-1
14.2.2 S-band 14-1

14.2.3 UHF 14-2
14.2.4 Technical Characteristics 14-2
14.3 Operations Procedures and Configurations 14-3
14.3.1 Procedures 14-3
14.3.2 Equipment Configurations 14-3
14.3.3 A-G Configurations 14-3

Section 15. Timing

Section 16. NCC/Station Interface

16.1 NCC/Network Standard Operating Procedures 16-1
16.2 Documentation, Scheduling, and Reporting Standard Operating Procedures 16-1
16.3 Message Formats and Method of Transmission 16-1
16.3.1 General 16-1
16.3.2 Four-Letter Designators 16-1
16.3.3 Interim Support Instruction (ISI) Message 16-2
16.3.4 Request for Information or Clarification (RIC) 16-3
16.3.5 Documentation Change Notice (DCN) General Header Format 16-4
16.3.6 Operations (OPN) Message 16-4
16.3.7 Station Equipment Status Report (ESR) 16-5
16.3.8 Problem Report (PRT) Message 16-5
16.3.9 Computer Software, Hardware Anomaly Message 16-5
16.3.10 Radio Frequency Interference (RFI) Report Message 16-5
16.3.11 Spacecraft/Vehicle Anomaly (SVA) Report 16-5
16.3.12 Space Shuttle Contingency Plan (SCP) (Sample) 16-6
16.3.13 Data Shipment Advisory Message 16-6
16.3.14 Support Request Message 16-6
16.3.15 Briefing Message Request 16-7
16.3.16 Tracking Summary Message (Teletype) - C-band Message Format 16-7
16.3.17 Video Activity Report (VAR) Message 16-8

16.3.18 MIL-originated S-band CRF Message (Non-nominal) (Teletype) 16-9
16.3.19 Space Shuttle Launch Count Status 16-9
16.3.20 Space Shuttle Liftoff Time 16-9
16.3.21 DOD Weather Report 16-10
16.3.22 Station Postmission Reporting Message (PSS) 16-10

Section 17. Equipment Modifications

17.1 General 17-1
17.2 STDN Implementation Schedule 17-1
17.2.1 General 17-1
17.2.2 Configuration Freeze 17-1
17.2.3 Exemptions 17-1
17.3 Engineering Changes 17-1
17.4 Request for Modification 17-2
17.5 Other Equipment Modifications 17-2
17.6 Status Reports 17-2

Section 25. Television

25.1 General 25-1
25.1.1 Space Shuttle Closed-Circuit Television System 25-1
25.1.2 Station Television Systems Station Configuration 25-1
25.2 Operating Procedures 25-1
25.2.1 Prepass Validation 25-1
25.2.2 Video Recording Requirements for VO-5600 VCRs 25-2
25.2.3 Audio Recording Requirements for VCR Audio Track 25-2
25.2.4 Video and Audio Recording and Playback Procedures 25-2
25.2.5 VTR Dump at STDN Station Procedures 25-2
25.3 Remoting Requirements 25-3
25.4 Typical Pass Activities 25-4
25.5 Handover Procedures 25-4

25.6 MIL TV Configuration 25-7
25.7 Pilot's Point of View Television 25-11

Section 26. Testing and Simulations

26.1 General 26-1
26.2 Mission Readiness Test 26-1
26.3 Prelaunch Simulations 26-1
26.3.1 Network Simulations 26-1
26.3.2 GSFC Simulations 26-2
26.4 Timeline for MRT for Space Shuttle 26-2
26.4.1 General 26-2
26.4.2 Events 26-2

Section 35. Documentation Briefing Report

Figures

1-1 Space Shuttle Launch Configuration 1-2
1-2 Space Shuttle Orbiter Vehicle 1-3
1-3 Typical Space Shuttle Flight Profile 1-4
1-4 Communications and Tracking System (DELETED) 1-10
1-5 Ground Communications Interface 1-31
1-6 Space Shuttle Telemetry Data Flow 1-32
1-7 Real-time OD Telemetry Data via the JSC OD 1-33
1-8 MIL/PDL Prelaunch/Launch Configuration (Simplified Block Diagram) 1-65
1-9 Space Shuttle Range Safety Support 1-77
1-10 WFF MIDDS Data Flow 1-79
1-11 TV Support Configuration for Space Shuttle (DFRC and MIL) 1-81
1-12 DFRC Support Configuration 1-82
1-13 MIL Launch Configuration 1-83

1-14 PDL Launch Configuration 1-84
1-15 MIL Orbital Configuration 1-85
1-16 MIL Landing Configuration 1-86
1-17 WSMR UHF/VHF Configuration 1-87
1-18 WPS Launch Support Configuration 1-88
1-19 WPS Orbital Configuration 1-89
2-1 MIL/PDL SSME Data Flow 2-12
2-2 MIL SLSS Simplified Telemetry Block Diagram 2-26
2-3 MIL Range Safety Configuration 2-38
2-4 MIL FM Dumps Data Flow Configuration 2-52
2-5 Postlaunch Playbacks 2-59
3-1 Launch Phase C-band Metric Data System 3-5
3-2 Orbit Phase C-band Metric Data System 3-7
3-3 Landing Phase C-band Metric Data System (KSC Landing) LTAS (TEFG-smooth) 2400 b/sec 3-8
3-4 Landing Phase C-band Metric (High Rate) Data System for Space Shuttle (Northrup Strip or EAFB Landings) 3-9
3-5 Landing Phase C-band Metric Acquisition Data System for Space Shuttle (WSSH or EAFB Landings) 3-10
3-6 Landing Phase C-band Metric (Low Rate) Acquisition Data System for Space Shuttle (Northrup Strip or EAFB Landings) 3-11
3-7 AOA Landing Phase C-band Metric (High Rate) Data System for Space Shuttle Northrup Strip Landings 3-12
4-1 Typical Prepass Checklist (RER) Master Controller (MIL Only) 4-18
4-2 Typical Prepass Checklist (RE) Slave Controller (MIL Only) 4-19
4-3 MIL RER Slave Controller Interface 4-20
4-4 RF Acquisition and Reacquisition Throughput Operations 4-22
4-5 Acquisition/Reacquisition Procedure Flow Diagram 4-23
4-6 Suggested GN S-band Receiver Configuration (Prior to Frequency Switch) 4-31

4-7 Suggested GN S-band Receiver Configuration (RER Systems) 4-32
4-8 Suggested GN S-band Receiver Configuration (After Frequency Switch) 4-33
5-1 GSFC to JSC NISN Block 5-2
5-2 NISN Header Setup 5-22
5-3 System Status 5-23
5-4 Operator Interface Screen 5-24
5-5 WFEP Telemetry Formats 5-25
5-6 Card Download Options 5-25
6-1 JSC Command Block Format 6-3
6-2 NCPS Command Echo Block 6-7
6-3 NCPS Status Block 6-8
6-4 MIL/PDL Throughput Commands 6-9
6-5 JSC Mode Menu Display 6-13
6-6 Tape Mode Menu Display 6-14
6-7 EVCF Mode Menu Display 6-15
8-1 Space Shuttle PDL Station Communications 8-3
8-2 Space Shuttle Orbital Phase Acquisition and Tracking Data System 8-9
8-3 TAL 4-Wire Voice Circuit Distribution 8-11
8-4 NISN IP Transition Configuration 8-14
8-5 IP Transition Infrastructure 8-16
8-6 JSC SCD Configuration for 192K OD Smoothing 8-21
8-7 72K Shuttle Command 8-22
8-8 Shuttle GN Contingency Return 8-23
8-9 Space Shuttle Wideband Circuits 8-26
8-10 Space Shuttle FCO Circuiting 8-28
8-11 Space Shuttle Landing Phase Tracking Data System (EAFB Landing/ WSMR Landing) 8-29
8-12 WSSH Landing Tracking System 8-30
8-13 Space Shuttle Launch and Return to Launch Site Phase Tracking Data System 8-31
8-14 Space Shuttle Video Circuits 8-33
11-1 STDN Label 2166, Space Shuttle Private Conversations 11-6

14-1 Prelaunch (Throughput) Until SRB Ignition A-G Configuration ALPHA 14-5
14-2 Ascent (Throughput) A-G Configuration BRAVO 14-6
14-3 Flight Ops UHF Configuration CHARLIE 14-7
14-4 Flight Ops A-G Configuration DELTA 14-8
14-5 Flight Operations (EVA) Ops A-G Configuration FOXTROT 14-9
14-6 Flight Ops UHF Configuration GOLF 14-10
14-7 DFRC Landing A-G Configuration HOTEL 14-11
14-8 DFRC Postlanding A-G Configuration INDIA 14-12
14-9 WSSH Contingency Landing/Postlanding A-G Configuration JULIET 14-13
14-10 Contingency Landing A-G Configuration KILO 14-14
14-11 RTLS/KSC Landing/Postlanding Configuration LIMA 14-15
14-12 Prelaunch/Launch Weather Aircraft Configuration 14-16

Tables

1-1 Approved Landing Sites and Site Usage 1-7
1-2 S-band RF Interfaces 1-12
1-3 S-band Station Support Capabilities 1-16
1-4 Voice Communications System 1-19
1-5 Antenna Allocations 1-34
1-6 Launch Configuration 1-41
1-7 Landing Configuration 1-42
1-8 Orbit Configuration 1-42
1-9 Tracking Pass Announcements 1-47
1-10 MIL/PDL/DFRC/WPS Announcements for Loss of Carrier/Modulation 1-49
1-11 MIL/PDL/DFRC/WPS Station H-35 Interface 1-54
1-12 MIL/DFRC Station TV H-30 Interface 1-58
1-13 C-band H-45 Interface and Pass Time Reporting 1-60
1-14 MIL/PDL/DFRC/WPS Station Postpass Activities 1-61

1-15 Nominal Prelaunch/Launch Configuration 1-64
2-1 Launch Support Requirements 2-2
2-2 Landing and Postlanding Requirements 2-3
2-3 FM DL, 2250.0-MHz Real-time DL Characteristics 2-7
2-4 FM DL, 2250.0-MHz Dump Configuration 2-7
2-5 Nominal Launch and DL Configuration 2-9
2-6 OD DL (2217.5/2287.5 MHz) Bit Synchronizer Setup (MIL/PDL) 2-10
2-7 FM DL (2250.0 MHz) Bit Synchronizer Setup (MIL/PDL) 2-10
2-8 MIL PSK Demodulator Setup for Launch 2-10
2-9 OD DL (2217.5/2287.5 MHz) Bit Synchronizer Setup 2-11
2-10 WPS FM DL SSME Bit Sync/Frame Sync Setup 2-14
2-11 MIL CCX Launch Configuration 2-15
2-12 DQM Setups for MIL Launch 2-18
2-13 DQM Setup for PDL Launch 2-19
2-14 Transponder Lock Indicator 2-20
2-15 Network Signal Processor (NSP) Indicator 2-20
2-16 DFRC Bit Sync Setup 2-21
2-17 DFRC Frame Sync Setup 2-21
2-18 DMS Program Formats 2-22
2-19 DMS Bit Sync Setup 2-22
2-20 403 Frame Sync Setup 2-23
2-21 PDL Launch Recorder Setup 2-31
2-22 PDL Analog Channel Setup for Launch 2-31
2-23 PDL Events Parallel Input 2-31
2-24 MIL Prelaunch Recorder Configuration 2-32
2-25 MIL Launch Analog Channel Setup for Recorders 2-33
2-26 MIL Events Parallel Input 2-33
2-27 Launch Phase Support MTR Track Assignments for WPS 2-34
2-28 MIL Postlanding Recorder Setup 2-35
2-29 MIL Postlanding Analog Channel Setup 2-36

2-30 Events Parallel Input for Postlanding 2-36
2-31 Landing and Postlanding Phase Support MTR Track Assignment for DFRC 2-37
2-32 MIL BSS DQM and Channels 2-40
2-32A PDL BSS DQM and Channels 2-40A
2-33 MIL Orbit/Landing Recorder Configuration 2-42
2-34 MIL Orbit/Landing Analog Channel Configuration for Recorders 2-43
2-35 Events Parallel Input Orbit 2-43
2-36 Orbit Support Requirements 2-44
2-37 Orbital Throughput Support 2-47
2-38 Bit Synchronizer Setup for Orbit Phase 2-48
2-39 403 Frame Sync Dump Monitor Program 2-49
2-40 Orbit Phase Support MTR Track Assignments for WPS 2-54
2-41 Orbit Phase Support MTR Track Assignments for DFRC 2-55
2-42 WBMTR Nonstandard Playback Speed Setup 2-58
3-1 Launch Phase Data Identification Parameters 3-3
3-2 Vehicle Identification Codes for Space Shuttle 3-6
4-1 OD DL, 2217.5-/2287.5-MHz PM Ops Downlink Mod Indices 4-2
4-2 FM DL, 2250.0-MHz FM Ops Downlink Mod Indices 4-4
4-3 2041.9-/2106.4-/1831.8-/1775.7-MHz UL Description and Mod Indices 4-6
4-4 Space Shuttle RER Preset Assignments 4-8
4-5 MFR Configuration for FM DL - 2250.0 MHz 4-14
4-6 Launch Ascent Exciter Frequency Offsets 4-26
4-7 MIL Launch Phase Receiver Configuration 4-27
4-8 PDL Launch Phase Receiver Configuration 4-27
4-9 High-speed Tracking Data Octal Destination Codes 4-39
5-1 Message Type Codes 5-3
5-2 MIL MUX Configuration for Launch 5-11
5-3 PDL MUX Configuration for Launch 5-11
5-4 MIL MUX Configuration for Orbit Support 5-12
5-5 Demux Settings to Demux PDL Main Engine Data 5-13
5-6 Demux Channel Assignments and Parameters 5-13
5-7 Station Default Parameters for CDF Deblocker 5-15

5-8 Operator Option Menu for CDF Deblocker 5-16
5-9 Parameter Change Menu for CDF Deblocker 5-17
5-10 CDF Destination Codes 5-18
5-11 Destination Codes 5-26
7-1 Space Shuttle Station Identification 7-5
7-2 Prime Acquisition Message Distribution by Mission Phase (1, 2, 3) 7-9
7-3 Contingency and Landing Acquisition Data Trajectory Codes 7-10
7-4 Ground Network Facility Vehicle Contingencies 7-11
7-5 Ground Network Facility Contingencies 7-11
8-1 Space Shuttle Voice Circuit Description 8-4
8-2 Television Circuit Troubleshooting Procedures 8-35
11-1 MIL Data Requirements and Disposition 11-7
11-2 PDL Data Requirements and Disposition 11-9
11-3 WFF Data Requirements and Disposition 11-10
11-4 WSMR Data Requirements and Disposition 11-11
12-1 Digital Voice Recorders Configuration for MIL/PDL 12-2
12-2 Digital Voice Recorders Configuration for Wallops 12-3
14-1 Station A-G Equipment Allocations 14-2
14-2 Shuttle Communications Modes 14-2
25-1 Typical Pass Activities 25-5

Abbreviations and Acronyms

Section 1. Mission Operations

1.1 Mission Description

1.1.1 General

The objectives of the Space Shuttle are to reduce substantially the cost of space operations and provide a capability to support a wide range of scientific, defense, and commercial uses. Space Shuttle missions involve direct delivery of payloads to low-earth orbits; placement of payloads and transfer stages in parking orbits for subsequent transfer to other orbits; rendezvous and stationkeeping with detached payloads for onorbit checkout; return of payloads to earth from orbit; and provisions for routine special support to space activities such as sortie missions, rescue, repair, maintenance, servicing, assembly, disassembly, and docking.

1.1.2 Space Shuttle System

1.1.2.1 Space Shuttle System Flight Hardware

a. The Space Shuttle flight hardware consists of a reusable Orbiter Vehicle (OV) including installed Main Engines (ME), an expendable External Tank (ET), and reusable Solid Rocket Boosters (SRB).

b. The flight hardware in the launch configuration is shown in Figure 1-1.

c. The OV is shown in Figure 1-2.

1.1.2.2 Flight Profile

A typical Space Shuttle flight profile is shown in Figure 1-3 and is described as follows:

a. The SRBs and the Orbiter Main Propulsion System (MPS) engines burn in parallel from liftoff. Thrust vector control commands are provided to the SRBs and the MPS by the OV guidance and control system.

b. SRB burnout and staging occurs at approximately 2.1 minutes into the flight. At this time, the SRBs are pyrotechnically separated from the ET and eight separation solid rocket motors on each SRB are ignited to accelerate the expended SRB cases from the vehicle. The SRB cases follow a ballistic trajectory after separation, decelerate by parachute, and are retrieved and refurbished.

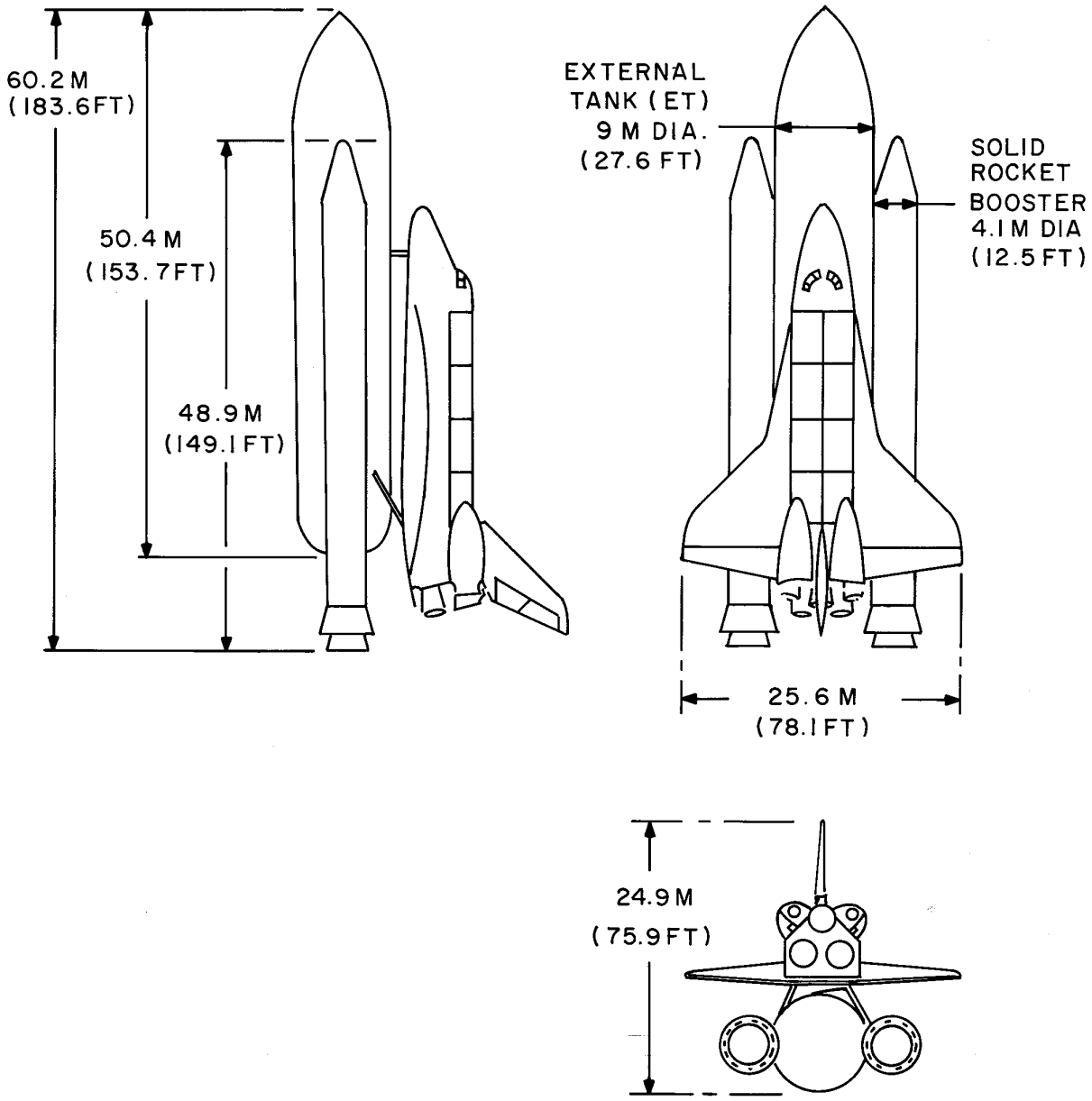

Figure 1-1. Space Shuttle Launch Configuration

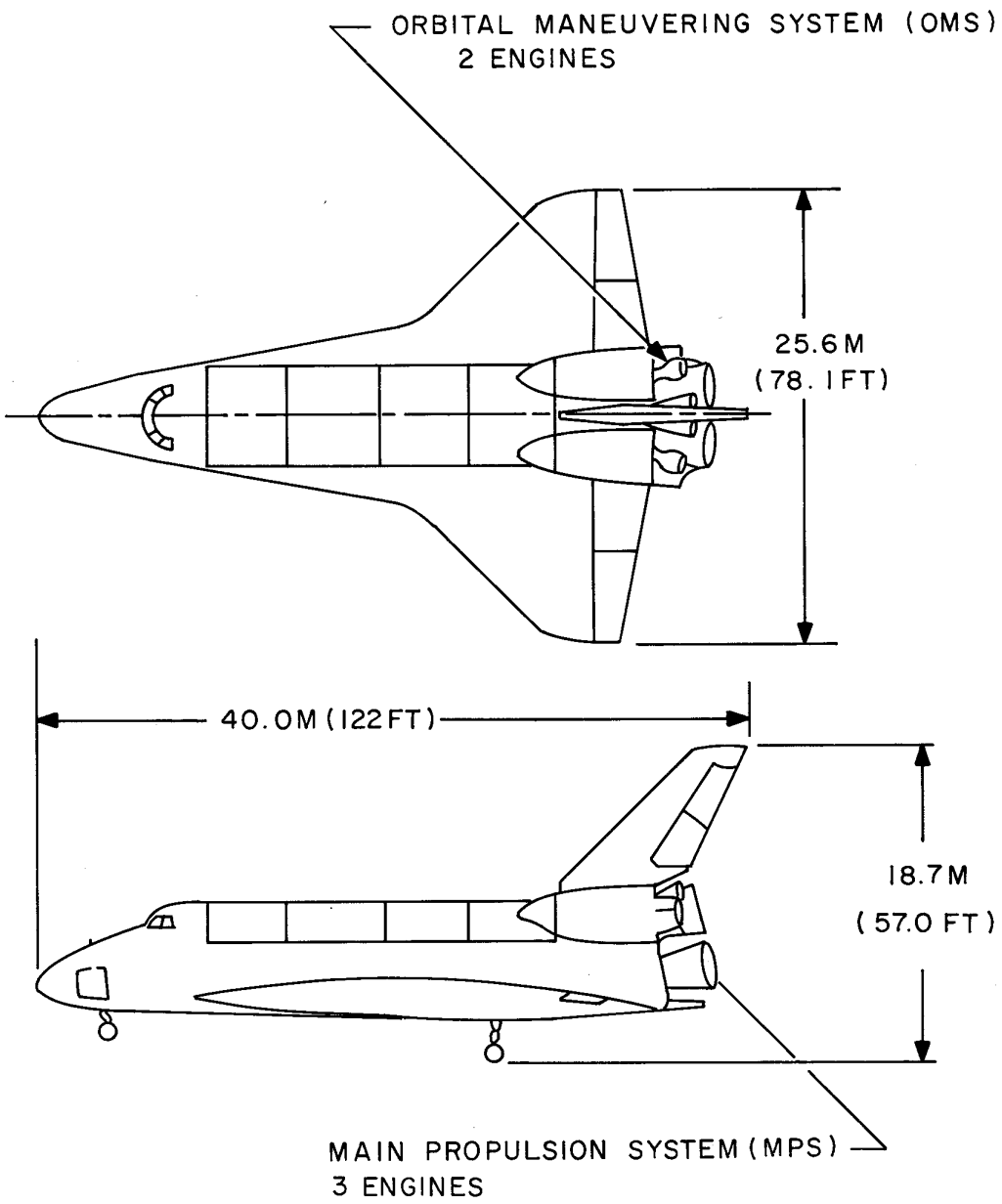

Figure 1-2. Space Shuttle Orbiter Vehicle

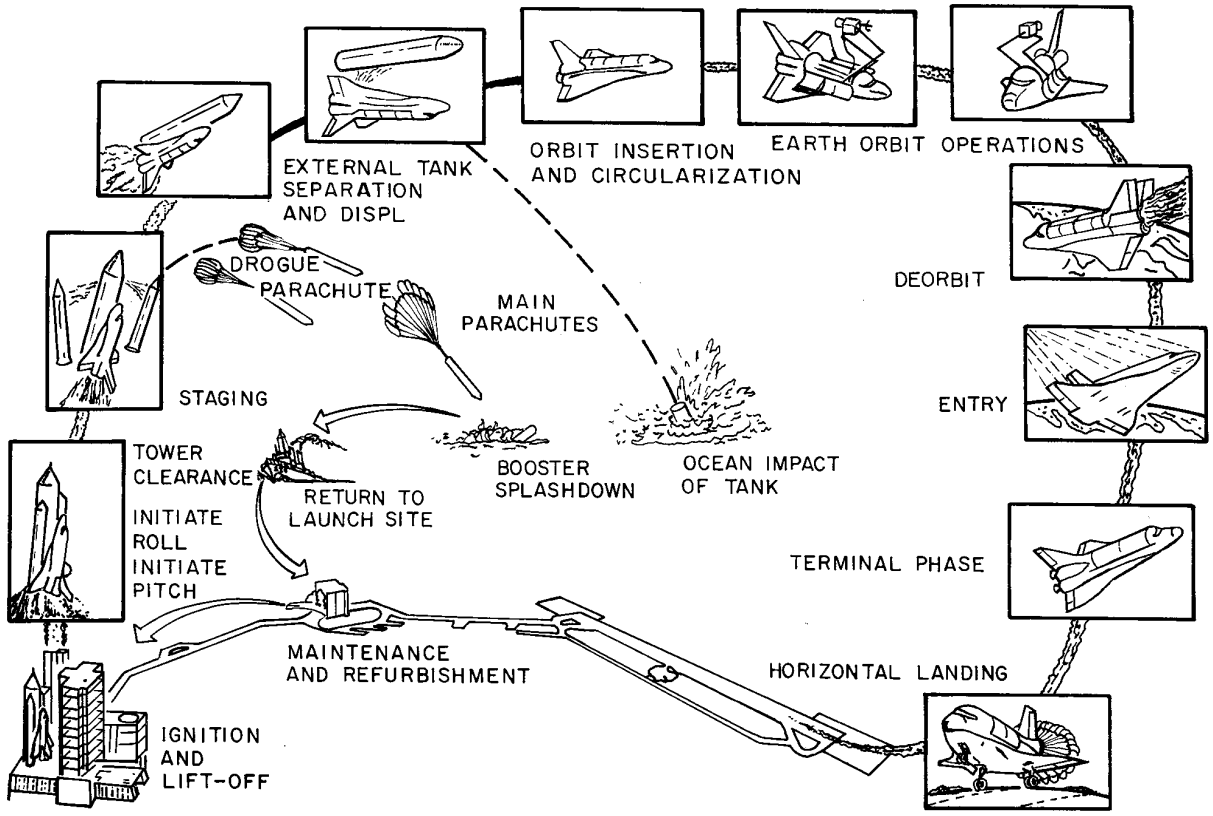

Figure 1-3. Typical Space Shuttle Flight Profile

c. The ET provides approximately 0.680 million kg of liquid oxygen and 0.104 million kg of liquid hydrogen for use by three 213,000-kg thrust Orbiter MPS engines. At approximately 8.5 minutes into the flight, the MPS engines are shut down and the ET is pyrotechnically separated. After separation, the tank follows a ballistic trajectory with impact in a designated unpopulated ocean area. The ET is not recoverable. Johnson Space Center (JSC) is responsible for providing the ET impact area predict coordinates to Goddard Space Flight Center (GSFC), which forwards these coordinates to the Australian Civil Aviation Authority (CAA) Rescue Coordination Center (RCC). (Refer to paragraph 1.3.1.17.)

d. The Space Shuttle Orbiter (SSO) achieves orbital insertion through use of the Orbital Maneuvering System (OMS) engines. An OMS-1 burn will be accomplished only if Space Shuttle Main Engine (SSME) performance dictates. An OMS-2 burn circularizes the SSO orbit. The earth orbit operations are then conducted.

e. On completion of earth orbit operations, deorbit, entry, and landing sequences are initiated. Deorbit is achieved by an OMS burn which reduces Space Shuttle velocity before it enters earth atmosphere. Atmospheric drag further slows the Space Shuttle so that it can maneuver to perform an unpowered horizontal landing. After landing, the Space Shuttle is returned to the Orbiter Processing Facility (OPF) at Kennedy Space Center (KSC) for refurbishing.

1.1.3 Abort Modes

If a malfunction occurs during the launch phase and prior to achieving orbit, there are seven abort modes from which to select. These abort modes are as follows:

a. Return to Launch Site (RTLS).

b. Abort Once Around (AOA).

c. Abort to Orbit (ATO).

d. Transoceanic Abort Landing (TAL).

e. Ditch.

f. East Coast Abort Landing (ECAL).

g. Bermuda Abort Landing (BAL).

1.1.4 Landing Sites

1.1.4.1

The Space Shuttle has four types of planned recovery (landing) sites as follows (refer to Table 1-1):

a. The first type is the End of Mission (EOM) site. This site has a full-up convoy, Space Shuttle landing aids, dedicated rescue forces, and other support, as required. KSC and Edwards Air Force Base (EAFB) are primary EOM sites. Mission objectives/requirements dictate as to which one is the planned EOM site for that specific mission. The primary site not designated as the planned EOM site will be the weather alternate site, and White Sands Space Harbor (WSSH) will be the tertiary site. Only the prime site will have a full-up convoy for a specific mission.

b. The second type of recovery site is the Augmented Landing Site (ALS). This type includes the RTLS, AOA, and TAL sites. ALSs will have Space Shuttle landing aids, Space Shuttle-trained crash/rescue forces, National Aeronautics and Space Administration (NASA) representation, and other support, as required.

c. The third type of landing site is the Augmented Emergency Landing Site (AELS). These are Emergency Landing Sites (ELSs) that have been specifically augmented to fill abort coverage gaps. These sites have Space Shuttle landing aids, Space Shuttle trained crash/rescue forces, and a minimal NASA/Department of Defense (DOD) staff to operate the landing aids. No NASA communications have been implemented to these sites.

d. The fourth type of landing site is the ELS. These sites offer a landing runway and a TACAN or DME only; NASA has no prearranged support. A subset of the ELSs are operated by the DOD. These DOD bases offer communication and logistical support that may not be available at other ELSs. The DOD Manager's Space Shuttle Support Office (DDMS) will inform these DOD bases of their possible use, provide training, and provide status reports to them before/during each mission.

1.1.4.2

When the SSO does not land at KSC, it is ferried from the landing airfield to KSC, using the Shuttle Carrier Aircraft (SCA).

1.1.4.3

The flow of Space Shuttle refurbishment functions from landing to launch is shown in Figure 1-5.

Table 1-1. Approved Landing Sites and Site Usage (1 of 2)

	EOM	RTLS	AOA	TAL	ECAL	ELS		ELS		Remarks
						LOW	MID	High (50° - 53.5^0)	High (53.6^o - 63.5^o)	
Amberley, Australia						X	X	X	X	
Amilcar Cabral, Cape Verde Is						X	X			
Anderson AFB, Guam, USA						X	X	X	X	
Arlanda, Sweden									O	Above 57°
Ascension AUX AF, Ascension Is								X		
Atlantic City Intl, Atlantic City, NJ, USA					X			X		
Banjul, the Gambia				X		X	X			
Beja, Portugal								X		
Ben Guerir, Morocco				X		X	X	X	X	
Bermuda Intl, Bermuda						X	X			
Cherry Point MCAS, NC, USA					X			X	X	
Dakar, Senegal						X				No agreement for use
Darwin, Australia						X	X	X	X	
Diego Garcia, Chagos Is, U.K.						X	X	X	X	
Dover AFB, DE, USA					X				X	
Dyess AFB, TX, USA						X	X	X	X	NOR AOA Weather (WX) Alternate
Edwards AFB, CA, USA	X		X			X	X	X	X	
Ellsworth AFB, SD, USA								O	O	
Elmendorf AFB, Anchorage AK								X		
Esenboga, Turkey								X	X	
Fairford, England								X	X	Ascent Only
Gander, NFLD, Canada					X			X	X	
Goose Bay, NFLD, Canada					X				X	
Grant County, WA, USA								O	O	
Grissom AFB, IN, USA										
Halifax Intl, NS, Canada					X			X	X	
Hao Atoll, Society Is, France						X	X	X	X	
Hickam AFB, HI, USA						X	X	X	X	
Hoedspruit, South Africa						X	X			
King Khalid Intl, Saudi Arabia						X	X	X	X	
Kinshasa, Zaire						X				
Koln-Bonn, Germany								X	X	
KSC (SLF), FL, USA	X	X	X			X	X	X	X	
Lajes AB, Azores, Portugal							X	X	X	Approved High & Mid Inclin. Only
Las Palmas, Canary Is, Spain						X	X			
Le Tube, Istres, France								X		Ascent Only
Lincoln Municipal, NE, USA								O	O	
Mataveri, Easter Is, Chile										
Miramar NAS, CA, USA										
Moron AB, Spain				X		X	X	X	X	
Mountain Home AFB, ID, USA								O	O	
Myrtle Beach, SC, USA					X				X	
Nassau Intl, Bahamas						X	X	O	O	Underburn in Software
Northrup (WSSH), NM, USA	X		X			X	X	X	X	
Oceana NAS, VA, USA					X			X	X	
Orlando Intl, FL, USA						X	X	O	O	Underburn in Low Software
Otis ANGB, MA, USA					X			X	X	
Pease, NH, USA					X			X	X	
Plattsburgh AFB, NY, USA										
Roberts Field, Liberia						X	X			
Rota NS, Spain										

Table 1-1. Approved Landing Sites and Site Usage (2 of 2)

	EOM	RTLS	AOA	TAL	ECAL	ELS		ELS		Remarks
						LOW	MID	High (50° - 53.5^0)	High (53.6^o - 63.5^o)	
St. Johns, NFLD, Canada					X			X	X	
Santiago, Spain										No Agreement for Use
Shannon, Ireland								X	X	Ascent Only
Shearwater/Halifax, NS, Canada										
Souda Bay, Crete, Greece						X	X			Above 40° Inclin. Only
Stephenville, NFLD, Canada					X			X	X	Prior Coordination for Night Use
Tamanrasset, Algeria						X	X			Mid Inclin. Ascent Only
The Francis S. Gabreski, Airport, Westhampton Beach, NY, USA					X			X		
Upper Hayford, U.K.										
Wake Island AAF, Wake Is								X		
Wallops Flight Facility, VA, USA					X			X		
Westover AFB, MA USA										
Wilmington Intl, Wilmington, NC, USA					X			X		
Wright-Patterson AFB, OH, USA										
Yokota, Tokyo, Honshu I., Japan								X		
Zaragoza AB, Spain				X			X	X	X	

Sites not currently being used on the Landing Site Tables

ELS LOW - Emergency Landing Sites available for low inclination KSC launches

ELS MID - Emergency Landing Sites available for mid inclination KSC launches

ELS HIGH - Emergency Landing Sites available for high inclination KSC launches

O - Downrange abort or deorbit underburn sites; coordinates not carried in onboard software

1.1.5 Space Shuttle Ground Communications and Tracking System

1.1.5.1 General

a. Tracking and Data Acquisition Support. Tracking and Data Acquisition (T&DA) support is required of the Spaceflight Tracking and Data Network (STDN), NASA Integrated Services Network (NISN), and those DOD elements from the Major Range and Test Facilities Base (MRTFB) and the Air Force Satellite Control Network (AFSCN).

b. Lead Support Center. The lead support center for Space Shuttle T&DA support is the GSFC. The T&DA network is composed of resources from several NASA and DOD organizations. The GSFC Network Integration Center (NIC) provides the capability to monitor data, perform testing and provide fault isolation assistance to the network (SN and GN). The NASA organizations are GSFC and the Dryden Flight Research Center (DFRC). The DOD organizations are the Eastern Range (ER), the Western Range (WR), the AFSCN, the Air Force Flight Test Center (AFFTC), the Naval Air Warfare Center (NAWC), the White Sands Missile Range (WSMR), and the U.S. Army Kwajalein Atoll (USAKA). The lead range for DOD support for Space Shuttle launches and landings is ER. The indicators used to delineate AFSCN support will be Remote Tracking Stations (RTS), which consist of the Colorado Tracking Station (CTS), Diego Garcia Station (DGS), Guam Tracking Station (GTS), Hawaii Telemetry Station (HTS), New Hampshire Station (NHS), Telemetry and Control Station (TCS)/(Oakhanger), Thule Tracking Station (TTS), and Vandenberg Tracking Station (VTS). The data interface for AFSCN/RTS Space Shuttle support is the 21 Space Operations Squadron (SOPS) at Onizuka Air Force Station (OAFS).

c. Space Shuttle Support Elements. The Space Shuttle support elements consist of the Space Network (SN) and the Ground Network (GN).

   1. Space Network. The SN consists of the White Sands Complex (WSC), the Data Services Management Center (DSMC), the Tracking and Data Relay Satellites (TDRS), supporting elements of the Flight Dynamics Facility (FDF), and elements of NISN that are scheduled for SN use.

   2. Ground Network. The GN consists of a worldwide network of tracking stations, within the NASA organizations and DOD agencies that support the T&DA function. The GSFC STDN stations are located at Merritt Island (MIL), Ponce de Leon (PDL), the Wallops Orbital Tracking Station (WOTS), and DFRC; the C-band radars are located at Wallops Flight Facility (WFF) and DFRC. Included in the GSFC support are the NIC and supporting elements of the FDF and NISN. Refer to Table 1-2 and Table 1-3 for GN station capabilities. Standard GN support element positions, call signs, center locations and function descriptions are provided in Table 1-4.

Figure 1-4. Communications and Tracking System (DELETED)

1.1.5.2 Radio Frequency Interfaces

The elements of the T&DA network use Radio Frequency (RF) Interfaces (I/F) to track and communicate with the SSO. A description of the interfaces is as follows:

a. Range Safety Command (RSC). The carrier frequency for the Flight Control Command (FCC) RF link is 416.5 MHz. Command receivers are installed on each SRB. Command transmitters are located at Cape Canaveral Air Force Station (CCAFS) (ER), and Jonathan Dickinson Institute (JDI) (ER). The command coding is classified. The carrier modulation mode is frequency modulation.

b. Ultra-high Frequency A-G Voice. The carrier frequency for Ultra-high Frequency (UHF) Air-to-Ground (A-G) voice is selectable at either 243.0, 259.7, or 296.8 MHz. Transceivers are installed on the SSO. Transmitters and receivers are located at DFRC, Oakhanger (TCS), MIL, PDL, Wallops S-band Station (WPS), and Salinas Peak.

c. C-band Skin-tracking Radar. Carrier frequencies for C-band skin-tracking radar will be in the 5400- to 5900-MHz band. The carrier is not modulated. Refer to Section 7 for transmitter and receiver locations.

d. S-band Frequency Modulated Downlink. Carrier frequency for Frequency Modulated Downlink (FM DL) is 2250.0 MHz. Data channels, which are frequency modulated on the carrier, are listed in Table 1-2. During launch, three real-time ME data channels may be modulated on the carrier simultaneously; all other data channels are transmitted one channel at a time. The FM DL is transmitted from the Space Shuttle using either upper or lower hemispherical antennas. Refer to Table 1-3 for stations which receive FM DL.

e. S-band Phase Modulated Uplink

1. The Space Shuttle is capable of receiving four Phase Modulated Uplink (PM UL) carrier frequencies from the ground tracking stations. The four PM UL carrier frequencies are as follows:

Carrier Frequency	Shuttle Mode	Frequency Mode
(a) 2041.9479 MHz	STDN	Low
(b) 2106.4063 MHz	STDN	High
(c) 1775.7324 MHz	Space-to-Ground Link System (SGLS)/AFSCN	Low
(d) 1831.7874 MHz	SGLS/AFSCN	High

Table 1-2. S-band RF Interfaces (1 of 4)

Link	Data	Frequency	Contents
			Downlink
OD DL	PM OPS	2217.5 MHz or 2287.5 MHz	a. Data only Mode 1. High Bit Rate (HBR): 192-kb/sec is phase modulated on the carrier with a modulation index of 0.55 ± 10% radian. The 192-kb/sec consists of the following: (a) 128-kb/sec: Telemetry (TLM). (b) 32-kb/sec: A-G voice 1. (c) 32-kb/sec: A-G voice 2 2. Low Bit Rate (LBR): 96-kb/sec is phase modulated on the carrier with a modulation index of 0.55 ± 10% radian. The 96-kb/sec consists of the following: (a) 64-kb/sec: TLM. (b) 32-kb/sec: A-G voice 1. b. Data and Ranging Mode 1. HBR with Ranging: 192-kb/sec is phase modulated on the carrier with a modulation index of .55 ± 10% radian. A 1.7-MHz subcarrier is also phase modulated on the carrier with a modulation index of 1.0 +20% - 10% radian. The Ranging Equipment (RE) ranging tones (500-kHz major range tone and no Ambiguity Resolving Code [ARC]) are phase modulated on the 1.7-MHz subcarrier. 2. LBR with Ranging: 96-kb/sec is phase modulated on the carrier with a modulation index of .55 ± 10% radian. A 1.7-MHz subcarrier is also phase modulated on the carrier with a modulation index of 1.0 +20% -10% radian. The RE ranging tones (500-kHz major range tone and no ARC) are phase modulated on the 1.7-MHz subcarrier.

Table 1-2. S-band RF Interfaces (2 of 4)

Link	Data	Frequency	Contents
			Downlink
FM DL	FM OPS	2250.0 MHz	a. Real Time 1. 60 kb/sec, digital ME 3 data channels, subcarriers, 576 kHz, 768 kHz, 1024 kHz, (launch phase only). 2. Real-time attached payload data (analog or digital). (a) Analog: up to 4 MHz. (b) Digital: up to 5 Mb/sec. 3. Television (TV). 4. DOD. b. Dump 1. Operational recorder: (a) 60-kb/sec digital ME 1:1 or 16:1 (960 kb/sec) (Only one data channel at a time) (b) 128-kb/sec Pulse Code Modulation (PCM) TLM: 1:1 to 8:1; up to 1024 kb/sec (c) 192-kb/sec Time-division Multiplexed (TDM) data: 128-kb/sec PCM TLM plus two 32-kb/sec digital voice channels at any one of two playback data bit rates: (1) 192 kb/sec (1:1 playback). (2) 960 kb/sec (5:1 playback).

Table 1-2. S-band RF Interfaces (3 of 4)

Link	Data	Frequency	Contents
			Downlink
FM DL (cont)			(d) 96-kb/sec TDM data: 64-kb/sec PCM TLM plus one 32-kb/sec digital voice channel at any one of two playback data bit rates: (1) 96 kb/sec (1:1 playback). (2) 768 kb/sec (8:1 playback). 2. Payload recorder playback data bit rate up to 1024 kb/sec. 3. Video Tape Recorder (VTR).
			Uplink
PM UL	Command and Voice	1831.7874 MHz (SGLS) or 1775.7324 MHz (SGLS) 2106.4063 MHz (STDN) or 2041.9479 MHz (STDN)	a. Data Only Mode 1. High Data Rate (HDR): 72-kb/sec is Phase-shift Key (PSK) modulated on the carrier with a modulation index of $\pi/2$. The 72-kb/sec consists of the following: (a) 6.4 kb/sec: Command (CMD). (b) 1.6 kb/sec: synchronization and station identification. (c) 32-kb/sec: A-G voice 1. (d) 32-kb/sec: A-G voice 2. 2. Low Data Rate (LDR): 32-kb/sec is PSK modulated on the carrier with a modulation index of $\pi/2$ radians. The 32-kb/sec consists of the following: (a) 6.4 kb/sec: CMD. (b) 1.6 kb/sec: synchronization and station identification. (c) 24-kb/sec: A-G voice 1.

Table 1-2. S-band RF Interfaces (4 of 4)

Link	Data	Frequency	Contents
			Uplink
PM UL (cont)	Command, Voice, and Ranging	2106.4063 MHz (STDN) or 2041.9479 MHz (STDN)	b. Data and Ranging Mode 1. High Data Rate with ranging: 72-kb/sec is phase modulated on the carrier with a modulation index of 1.25 radians. A 1.7-MHz subcarrier is also phase modulated on the carrier with a modulation index of 1.0 radian. The RE ranging tones (500-kHz major range tone and no ARC) are phase modulated on the 1.7-MHz subcarrier. 2. Low Data Rate with ranging: 32-kb/sec is phase modulated on the carrier with a modulation index of 1.25 radians. A 1.7-MHz subcarrier is also phase modulated on the carrier with a modulation index of 1.0 radian. The RE ranging tones (500-kHz major range tone and no ARC) are phase modulated on the 1.7-MHz subcarrier.

Table 1-3. S-band Station Support Capabilities

S-band Stations	Tracking			Air-To-Ground		S-band Receive and Record			Command Function	Data Processing, Playback, and Transmission				Mission Phase Support				S-band Stations
	High-Rate Tracking Data	Low-Rate Tracking Data	Ranging	UHF Voice	Record and Playback UHF	OD DL Receive and Record	FM DL Receive and Record	TV Receive	PM Uplink	Playback Real-time and Dump Data	Automated Site Status Message	Command History	Range Safety TLM Parameters	Launch Support	Orbit Support	Landing Support	Post-Landing	
DFRC				X	X	X	X	X	X	X	X (3)				X	X	X	DFRC
MIL	MDDF UTDF	UTDF	X	X	X	X	X	X	X	X	X	X	X	X	X	X	X	MIL
PDL				X		X	X		X	X	X	X	X	X				PDL
CTS						X	X		X (2)	X		X			X	X		CTS
DGS						X	X		X (2)	X		X		X		X		DGS
GTSA						X	X		X (2)	X					X			GTSA
GTSB						X	X		X (2)	X		X			X			GTSB
HTSA						X	X		X (2)	X		X			X			HTSA
HTSB						X	X		X (2)	X		X			X			HTSB
VTSA						X	X		X (2)	X		X			X	X		VTSA
VTSB						X	X		X (2)	X		X			X	X		VTSB
NHSA						X	X		X (2)	X		X		X	X			NHSA
NHSB						X	X		X (2)	X		X		X	X			NHSB
TTSA						X	X		X (2)	X		X			X			TTSA
TTSB						X	X		X (2)	X		X			X			TTSB
TCSA						X	X		X (2)	X		X		X	X			TCSA
TCSB						X	X		X (2)	X		X		X	X	X		TCSB
WPS				X	X	X	X		X	X	X (3)		X	X				WPS

NOTE

1. Not applicable for DOD operations.
2. Real-time command echos are provided to JSC for prepass I/F checks.
3. CMD only Site Status Message (SSM).
4. The encrypted and unencrypted PM UL data, RTS echo data, and PM DL data is monitored at OAFS.

2. The Space Shuttle can only be in one mode at a time and can only receive one carrier frequency at a time in each mode. The data channels, which are phase modulated on the carrier, are listed in Table 1-2. The Space Shuttle can have the following configurations, but only one configuration at a time:

   (a) Carrier or high-rate data and carrier.

   (b) Carrier or low-rate data and carrier.

   (c) High-rate data and carrier or ranging plus high-rate data and carrier or carrier only.

   (d) Low-rate data and carrier or ranging plus low-rate data and carrier or carrier only.

3. The Space Shuttle receives PM UL, using either upper-left quad antenna, lower-left quad antenna, upper-right quad antenna, or lower-right quad antenna. The antenna for both the Uplink (UL) and Downlink (DL) is the same. Each quad antenna will have a forward and aft pointing element. Refer to Table 1-3 for stations which transmit PM UL to Space Shuttle.

4. The Space Shuttle can receive PM UL from only one station at a time.

f. S-band Operational Data Downlink

1. The Space Shuttle is capable of transmitting two Operational Data Downlink (OD DL) carrier frequencies. Only one OD DL carrier frequency is transmitted at a time. The carrier frequency used is determined by the PM UL configuration of Space Shuttle as follows:

OD DL Carrier Frequency	**PM UL Carrier Frequency**	**Shuttle Mode**	**Freq Mode**
(a) 2217.5 MHz	2041.9479 MHz	STDN	Low
(b) 2287.5 MHz	2106.4063 MHz	STDN	High
(c) 2217.5 MHz	1775.7324 MHz	SGLS/AFSCN	Low
(d) 2287.5 MHz	1831.7874 MHz	SGLS/AFSCN	High

2. OD DL carrier frequency does not sweep except for effects of Doppler. The OD DL carrier frequency is controlled by an auxiliary oscillator on Space Shuttle until Space Shuttle receiver locks to the PM UL. When Space Shuttle receiver locks to PM UL, the OD DL carrier frequency is controlled by the frequency at which the Space Shuttle receiver is locked. When Space Shuttle receiver loses lock, the OD DL is again controlled by an auxiliary oscillator. The Space Shuttle transmits OD DL, using either upper-left quad antenna, lower-left quad antenna, upper-right quad antenna, or lower-right quad antenna. Space Shuttle can have the following configurations, but only one configuration at a time:

   (a) High-rate data and carrier or high-rate data plus ranging and carrier.

(b) Low-rate data and carrier or low-rate data plus ranging and carrier.

NOTE

The normal configuration of the S-band transponder will have the ranging channel enabled. Even though the ground station is not transmitting a ranging subcarrier, the OD DL carrier will be modulated by turnaround noise when the transponder is in the coherent mode. This turnaround noise will deviate the carrier approximately 1 radian and will have a center frequency of 1.7 MHz. The bandwidth of the turnaround noise will be approximately 2 MHz.

3. Refer to Table 1-3 for stations which receive OD DL.

g. RF Acquisition Design for the PM UL and OD DL. The Space Shuttle receiver (transponder) and the ground receiver provide automatic acquisition for carrier only on the PM UL and data modulation on the OD DL. When the Space Shuttle and ground receivers are correctly locked, modulation will be applied on the PM UL. The Space Shuttle S-band PM system has two RF power modes, STDN high power and STDN low power. The STDN high-power mode provides an additional 16 dB of RF gain on the DL.

Table 1-4. Voice Communications System (1 of 12)

Position	Callsign	Center/Location	Function
SITE COORD			
Ground Control (GC)	GC	JSC/MCC	General Mission Control Center (MCC) operations.
Data Flow Engineer (DFE)	DFE	JSC/MCC	TLM data flow activities. GN S-band tracking data flow and validity.
Houston Command	Houston CMD	JSC/MCC	Conducts H-10 I/F and briefing, CMD UL data rate changes, verbal handovers, and general CMD UL flow.
Houston Com Control	Com Control	JSC/MCC	Coordination of data line configuration to and from the MCC.
Houston Voice Control	Houston Voice	JSC/MCC	Coordination of voice circuits configuration to and from the MCC.
Houston Com Tech	Houston Com Tech	JSC/MCC	A-G voice configuration.
Instrumentation Communications Officer (INCO)	INCO	JSC/MCC	Space Shuttle communications configurations.
GSFC Network Operations Manager (NOM)	Goddard Ops	GSFC/NIC	Coordinates all Network activities, NIC, and STDN operations.
Network Director (ND)	ND	GSFC/NIC	Responsible for the control and technical operation of the STDN.
STDN Mission Manager	SMM	GSFC/NIC	Monitor all activities and assist in anomaly resolution.
GSFC Com Manager	Com Manager	GSFC/NASA Communication Network (NISN)	All voice data line configurations to and from GSFC.
GSFC Voice Control	Goddard Voice	GSFC/NISN	Voice line configuration.
MIL, PDL, WPS, DFRC, Com Tech	MILA, PDL, Wallops, Dryden, Com Tech	GSFC/Station	Configuration of stations A-G communications

Table 1-4. Voice Communications System (2 of 12)

Position	Callsign	Center/Location	Function
SITE COORD (cont)			
MIL/PDL, WPS Ops DFRC TM	MILA, PDL, Dryden TM Wallops	GSFC/DFRC Station	Operation of all station systems, acquisition, processing, transmission of Spacecraft (S/C) data, station pass time, and status reporting.
Dryden Comm Control	Dryden Com		Dryden Communications Control (DCC) establishes voice/data I/F.
GSFC Flight Dynamics Facility (FDF) Communications	FDF Com	GSFC/FDF	Provides acquisition data for all stations.
GSFC Mission Integration: TLM CMD Track A-G	 Goddard TLM Goddard CMD Goddard Track Goddard Com Tech	GSFC/NIC	Monitors station status, configuration, and station performance; prepares documentation changes and problem analysis.
DOD Track	DOD Track	ER/LRCC	DOD Network Operations. Reports DOD and NASA C-band radar status, in support of launch, orbit, and landing. Includes WFF, DFRC, AFFTC, ER, WSMR, WR, and USAKA.
Houston TV Control	Houston TV	JSC/MCC	Maintains control of prepass and pass video and audio quality assessments at MCC, coordinates postpass TV playbacks. Schedules TV activity

Table 1-4. Voice Communications System (3 of 12)

Position	Callsign	Center/Location	Function
SHUTTLE SUPPORT COORD			
GC	GC	JSC/MCC	Coordinates with Sunnyvale DICE for configurations, trouble shooting of voice, TLM, and CMD interfaces with OAFS and RTS
DFE	DFE	JSC/MCC	Coordination of payload OD TLM and recorder dump data flow from RTS sites.
Houston Command	Houston CMD	JSC/MCC	Coordination of payload and Space Shuttle command interfaces with OAFS.
Houston Com Tech	Houston Com Tech	JSC/MCC	Coordination of A-G voice interfaces with RTS.
Mission Controller	Sunnyvale DICE	OAFS	Responsible for all AFSCN activities for Orbiter support only.
GSFC NOM	Goddard Ops	GSFC/NIC	Coordinates all Network operations.

Table 1-4. Voice Communications System (4 of 12)

Position	Callsign	Center/Location	Function
MCC COORD			
GC	Shuttle GC	JSC/MCC	Communication with remote Payload Operations Control Center (POCC), Marshall Space Flight Center (MSFC) (Marshall Ops), OAFS (Sunnyvale Data), and WSC (for payload questions).
DFE	DFE	JSC/MCC	Payload data operations, JSC real-time and playback OD data flow with MSFC and OAFS. Coordination of RTS tracking data interface.
Houston Command	Houston CMD	JSC/MCC	Remote POCC CMD coordination.
Houston Voice Control	Houston Voice	JSC/MCC	Coordination of voice circuits with POCCs.
Houston Com Tech	Houston Com Tech	JSC/MCC	A-G voice coordination with remote POCCs which have A-G voice capability requirements.
Orbit Analyst	Sunnyvale Orbit	OAFS	Coordination with DFE regarding STS vectors electronically transferred via the PTPs.
STDN Mission Mgr	SMM	GSFC/NIC	Monitor all activities and assist in anomaly resolution.
NOM	Goddard Ops	GSFC/NIC	Coordination of network operations.
FDF	FDF	GSFC/NIC	Provide updated vectors (IIRVs) for payload operations.
MIL Ops	MILA	MIL	Coordination of playback (OD and SSME) from JSC to KSC/RPS via MIL.
Marshall Data Control	Marshall Data	MSFC/HOSC	JSC real-time OD data, Ops recorder dump playback coordination.
WSC	WSGT/STGT Ops	WSC/WSGT, STGT	Coordinates with JSC and remote POCCs to provide space network telemetry and command support
Remote POCCs	(Mission Specific)	N/A	Payload data, CMD, and voice coordination with JSC.

Table 1-4. Voice Communications System (5 of 12)

Position	Callsign	Center/Location	Function
TV CONFERENCE			
Houston Television (TV) Control	Houston TV	JSC/MCC	Maintains control of prepass and pass video and audio quality assessments at MCC, coordinates post-pass TV playbacks. Schedules TV activity.
Station TV Tech	GSFC TV	GSFC	Remoting to Houston TV; test pattern for prepass checks; real-time TV during pass support and TV playbacks, if any; post-pass, prepass, and pass video and audio quality assessments.
Station TV Tech	MILA TV	MIL	Remoting to Houston TV; test pattern for prepass checks; real-time TV during pass support and TV playbacks, if any; post-pass, prepass, and pass video and audio quality assessments.
Station TV Tech	DFRC TV	DFRC	Remoting to Houston TV; test pattern for prepass checks; real-time TV during pass support and TV playbacks, if any; post-pass, prepass, and pass video and audio quality assessments.
GE Americom Earth Station Tech	_____ earth station	GE Earth Station, KSC, GSFC, WSC, DFRC, and Houston TV	Configure for transmit/receive support as required in response to GSFC Communication Manager (Com Mgr) prior to I/F with NIC and JSC/MCC. After I/F with JSC/MCC, respond to Houston TV for transmit/receive configurations, initial continuity checks, and Handover (H/O) procedures.

Table 1-4. Voice Communications System (6 of 12)

Position	Callsign	Center/Location	Function
TV CONFERENCE (cont)			
GSFC Com Manager GSFC TV	Com Manager Goddard TV	GSFC/NISN	Establish satellite video/ audio links and conduct quality checks prior to I/F with JSC/MCC. After JSC/MCC I/F initiates coordination with Houston TV to resolve NISN problems. Coordinates STDN operational support and testing as required. Subsequent to initial TV checkout, maintains a monitor role responding to Houston TV when required.
Houston TV MSFC TV Tech DFRC TV Tech GYVW WB Tech JYVO TV Tech MIL TV Tech	Houston TV Marshall TV DFRC TV GYVW KSC WB KSC TV MILA TV	JSC MSFC DFRC KSC MIL	Configure for transmit/ receive support as required in response to GSFC Com Mgr prior to I/F with GSFC TV and JSC/MCC.
White Sands TV/ STGT TV	White Sands TV/ STGT TV	WSC	Configure for transmit/ receive support as required in response to GSFC Com Mgr prior to I/F with GSFC TV and JSC/MCC.

Table 1-4. Voice Communications System (7 of 12)

Position	Callsign	Center/Location	Function
TRACK COORD			
DFE	DFE	JSC/MCC	S-band tracking data processing and ephemeris coordination.
NOM	Goddard Ops	GSFC/NIC	Coordinates GN tracking operations.
GSFC Track	Goddard Track	GSFC/NIC	Coordinates and assists in station tracking activities. Identifies acquisition messages to be used by stations.
STDN Mission Manager	SMM	GSFC/NIC	Monitor all activities and assist in anomaly resolution.
FDF Communications	FDF Comm	GSFC/FDF	Generates acquisition messages; ephemeris coordination.
Dryden RCO	Dryden RCO	DFRC/MCC	DFRC radar data acquisition reformatting and transmission of AFFTC and DFRC radar data to ER/ROCC. Report DFRC AOS/LOS and pass announcements. Coordinates activities between Dryden RCO, Edwards RCO, ROCC, DOD Track and Lemon 1.
AFFTC RCO	Edwards RCO	AFFTC/RCC	AFFTC radar data acquisition; reformatting and retransmission of AFFTC and DFRC radar data to WR data switch for ER/ROCC. Reports AFFTC AOS/LOS and pass announcements.
ER/ROCC Controller		Lemon 1	ER/ROCC high-speed C-band radar tracking data flow with ER/ROCC and data source selection for transmission to JSC.

Table 1-4. Voice Communications System (8 of 12)

Position	Callsign	Center/Location	Function
TRACK COORD (cont)			
MIL	MILA	GSFC/MIL	Coordinates tracking, processing and transmission of S-band tracking data (HS, LS and MDDF). Also coordinates Range Safety activities.
WFF Controller	Wallops Control	WFF	WFF range operations control.
WFF FPQ-6	Gold 86 Alpha	WFF	Radar operations.
WFF FPS-16 (Runway)	Gold 86 Bravo	WFF	Radar operations.
WFF FPS-16 (Island)	Gold 86	WFF	Radar operations.
DOD Tracking Coordinator	DOD Track	ER/LRCC	Coordinates radar tracking and data flow of all DOD resources.
ER Radar Controller	CAT 1	ER/ROCC	ER radar data acquisition and transmission of radar data to ER/ROCC.
USAKA RCO	USAKA RCO	USAKA/RCC	Reports AOS/LOS and pass time announcements.
WSMR RCO	White Sands RCO	WSMR/RCC	Reports WSMR AOS/ LOS and pass time announcements

Table 1-4. Voice Communications System (9 of 12)

Position	Callsign	Center/Location	Function
TRACK COORD (cont)			
WSMR Real-time Data Systems Range Analyst	White Sands Data	WSMR/RCC	WSMR radar data acquisition; reformatting and retransmission of WSMR radar data to ER/ROCC.
WR Data Switch	Delta 35	WR/RCC	Performs configuration and Operation checkout of lines to ER. Selection and transmission of WR, AFFTC, DFRC, and PMTC radar data to ER.
WR RCO	WR RCO	WR/RCC	Reports WR C-band AOS/LOS and pass time announcements.
WR MCS	WR	WR/RCC	Coordinates radar tracking and data flow; reports WR C-band AOS/LOS and pass announcements. Time and status reporting.

Table 1-4. Voice Communications System (10 of 12)

Position	Callsign	Center/Location	Function
AIR-TO-GROUND			
Spacecraft Communicator	CAPCOM	JSC/MCC	Space Shuttle flight operations.
Space Shuttle Commander (CDR)	CDR (Shuttle name)	JSC/Orbiter	Space Shuttle.
Space Shuttle Pilot (PLT)	PLT (Shuttle name)	JSC/Orbiter	Space Shuttle.
Flight Director	Flight	JSC/MCC	Flight.
Surgeon	Surgeon	JSC/MCC	Medical.
Houston Com Tech	Houston Com Tech	JSC/MCC	Checkout and evaluation of A-G circuits.
GSFC Voice Control	Goddard Voice	GSFC/NISN	NISN A-G configuration.
MIL Com Tech WLPS Com Tech DFRC Com Tech	____Com Tech (station)	MIL/WLPS DFRC Com Tech	Performs checkout of UHF A-G circuits with MCC Com Tech; prepass and postpass station support.

Table 1-4. Voice Communications System (11 of 12)

Position	Callsign	Center/Location	Function
NIC INTERFACE COORD			
GSFC NOM TLM CMD Track A-G	 Goddard Ops Goddard Telemetry Goddard CMD Goddard Track Goddard Com Tech	GSFC/NIC	Coordinate all network activities and NIC/GN I/F tests. Verify station configuration, perform data flow test (NIC I/F) prior to MCC I/F.
GSFC Voice Control	Goddard Voice	GSFC/NISN	Voice line configuration.
GSFC Com Manager	Com Manager	GSFC/NISN	All voice and data line configuration to and from STDN and GSFC.
WPS	Wallops	GSFC/Station	Operation of all WPS systems.
Dryden Operations	Dryden TM	DFRC	Operation of all DFRC S-band systems.
LEAD RANGE COORD			
DOD Tracking Coordinator	DOD Track	ER/LRCC	Coordinates DOD network operations resources, including radar tracking and data flows. Provides status of DOD Tracking Network to Goddard Ops.
DFE	DFE Track Controller	JSC/MCC	S-band tracking data processing and ephemeris coordination.
NOM Track	Goddard Ops Goddard Track	GSFC/NIC	Coordinates GN tracking operations with DOD Tracking Network.
STDN Mission Mgr	SMM	GSFC/NIC	Monitors all Network activities and assists in anomaly resolution.

Table 1-4. Voice Communications System (12 of 12)

Position	Callsign	Center/Location	Function
GODDARD/MARSHALL COORD			
Marshall Data Control	Marshall Data	MSFC/HOSC	Performs data flow testing and playbacks with MIL and KSC.
MIL Ops	MILA	GSFC/MIL	Provides station configuration and status for testing and launch. Performs interface testing with NIC prior to the MCC interface.
NOM	Goddard Ops	GSFC/NIC	Coordinates all MIL activities. Perform NIC interface testing with MIL prior to the MCC interface. Verify station configuration and status.
STDN Mission Mgr	SMM	GSFC/NIC	Monitors all activities and assists in anomaly resolution.
GC/NOM COORD			
GC	GC	JSC/MCC	Provides coordination between the JSC MCC, GSFC NIC, and WSC.
NOM	Goddard Ops	GSFC/NIC	Coordinates all prelaunch, launch and on-orbit activities, and assists in anomaly investigation between GSFC and JSC.
STDN Mission Mgr	SMM	GSFC/NIC	Monitors all acitvities and assists in anomaly resolution, to resolve schedule conflicts and administrative matters during mission support between GSFC and JSC.
Network Director	ND	GSFC/NIC	NASA Manager for Network support

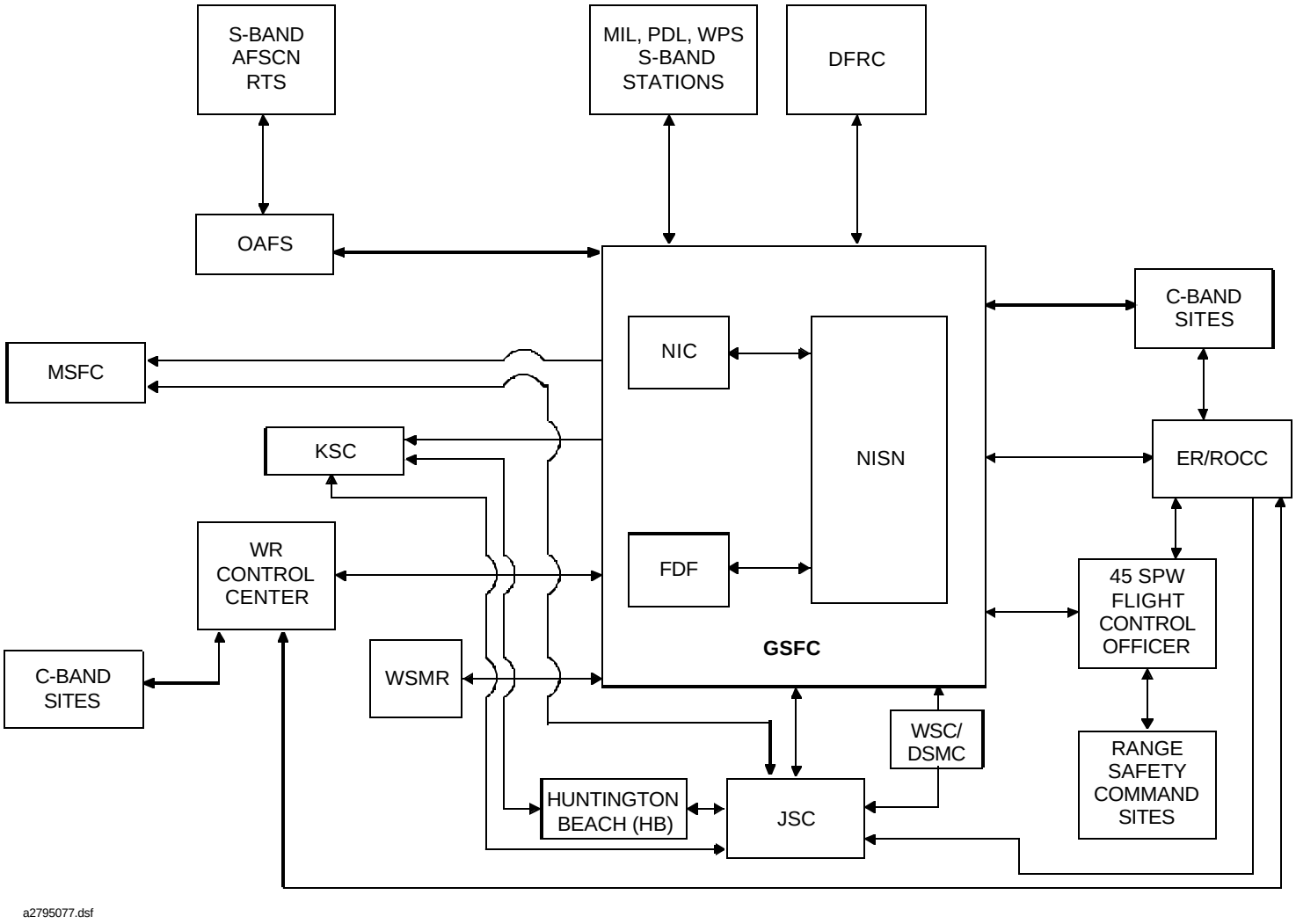

Figure 1-5. Ground Communications Interface

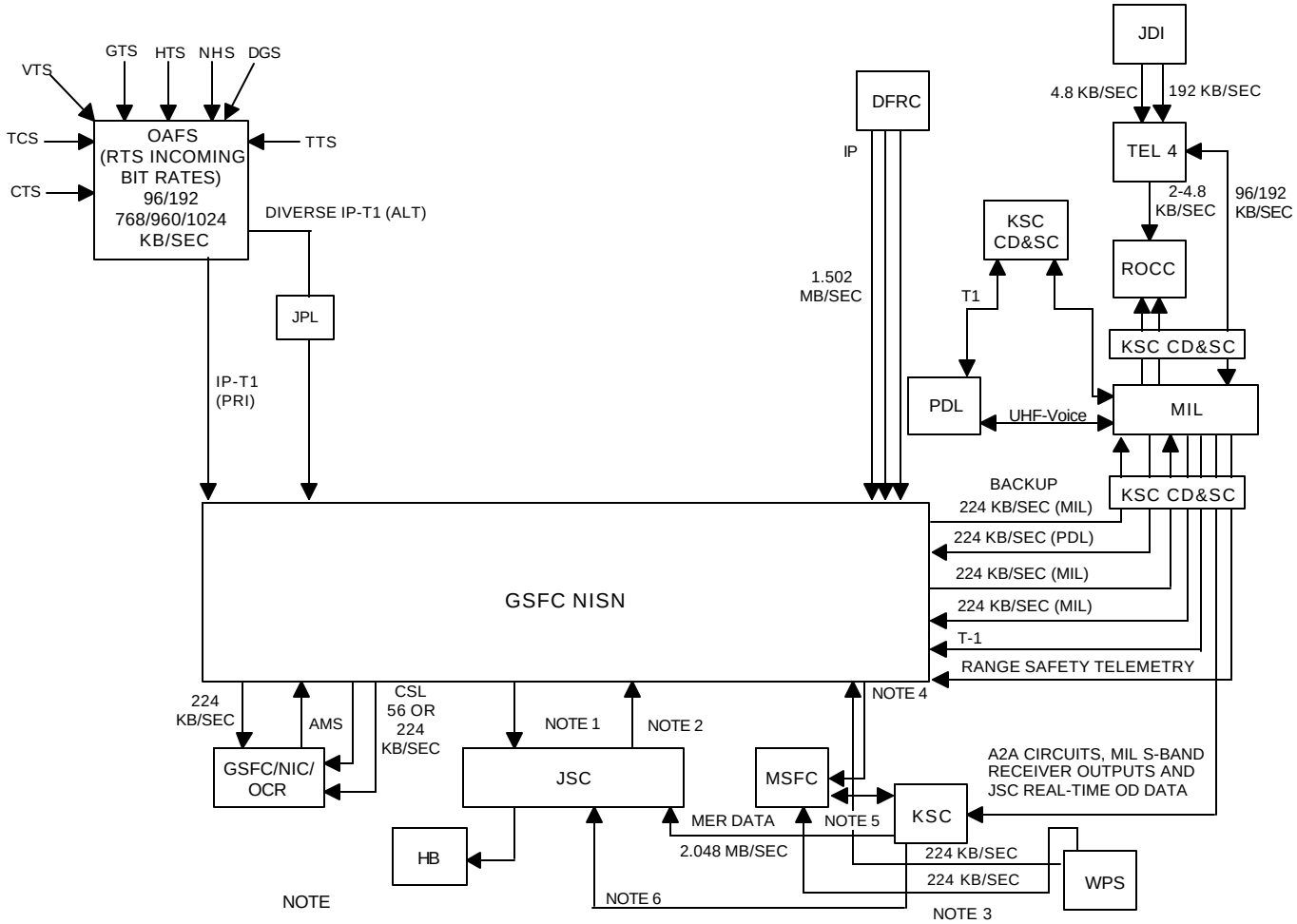

1. 840 KB/SEC CHANNEL IN THE GSFC/JSC NASCOM-2000 (CONTINGENCY).
2. 224 KB/SEC CHANNEL IN THE GSFC/JSC NASCOM-2000 FOR JSC REAL-TIME OD DATA.
3. 224 KB/SEC CIRCUIT FOR SSME DATA DURING HIGH INCLINATION LAUNCHES ONLY.
4. 224 KB/SEC CHANNEL IN THE GSFC/MSFC NASCOM-2000 FOR JSC REAL-TIME OD DATA.
5. 2.048 MB/SEC CIRCUIT FOR JSC REAL-TIME OD DATA BACKUP TO MSFC.
6. 1.5 MB CIRCUIT FOR REAL-TIME ORBITER OI PCM TLM FROM KSC TO HB VIA JSC.

A2795014.dsf

Figure 1-6. Space Shuttle Telemetry Data Flow

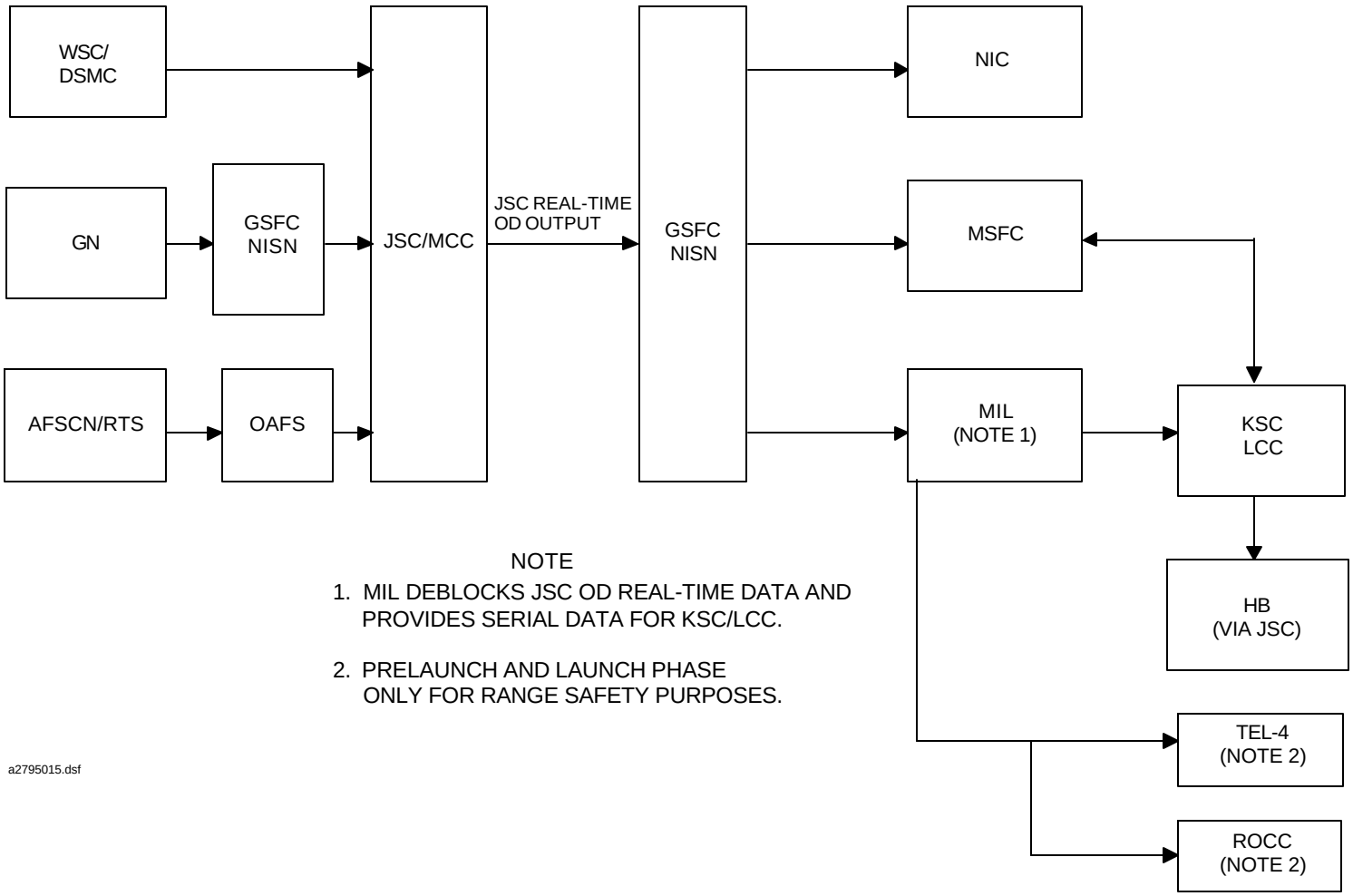

Figure 1-7. Real-time OD Telemetry Data via the JSC OD

Table 1-5. Antenna Allocations

Station	S-band																		UHF									
	18M		14M		11M		10M		9M		7.3M		7M		6M		4.3M		Fixed Disk Cone (Note 2)		TELTRAC (18)		Parabolic Dish		OMNI		QUAD	
	TX	RX	TX	RX	TX	RX	TX	RX	TX	RX	TX	RX	TX	RX	TX	RX	TX	RX	TX	RX	TX	RX	TX	RX	TX	RX	TX	RX
Alamo Peak												X																
Atom Peak												X																
CTS							X	X																				
DFRC (ATF1/ATF2)													X	X	X													
DFRC (84824)																							X	X				
DGS							X	X																				
GTSA	X	X																										
GTSB			X	X																								
HTSA	X	X																										
HTSB			X	X																								
JDI				X																								
MIL (Note 1)									XX	XX											X	X					X	X
NHSA	X	X																										
NHSB			X	X																								
PDL																	X	X	X	X								
Salinas Peak																									X	X		
TCSA	X	X																			X	X						
TCSB							X	X													X	X						
TTSA					X	X																						
TTSB			X	X																								
TTSC							X	X																			X	X
VDTS							X	X																				
VTSA	X	X																										
VTSB			X	X																								
WPS									X	X		XX			X												X	X

Note

1. MIL: 9M-1 antenna north/south keyhole prime for launch and Return to Launch Site (RTLS) and 9M-2 antenna east/west keyhole.

2. PDL: Fixed disk cone used for high-inclination launches and backup to MIL UHF only.

1.2 Mission Preparation

1.2.1 Minus Day Schedule

The minus day schedule is supplied by using regular scheduling procedures.

1.2.2 Launch (Terminal) Count

1.2.2.1 Purpose

Identify and coordinate all prelaunch activities of the ground data system to ensure that all systems are configured and prepared to support launch. The launch (terminal) count for each mission will be provided by Interim Support Instruction (ISI).

1.2.2.2 Participants

All agencies are identified in the terminal count.

1.2.2.3 Procedures

L minus sequences count down to a nominal launch time. L minus times do not include planned holds. Launch pad area dependent sequences are indicated by T minus times that do not count down during planned holds. The L minus time will hold only during an unplanned hold that causes a launch delay.

1.2.2.4 Station I/F

a. CMD I/F

1. CMD Radiation Restriction

   (a) Dummy Load. Prelaunch CMD I/F with MIL/PDL is accomplished by radiating into a dummy load. All others are accomplished by radiating into the antenna at zenith.

   (b) Test CMD. Station CMD testing is limited to radiation of the Uplink Test (ULT) Command.

   (c) Clearance Requirement. Stations (except MIL/PDL) operating within 140 nautical miles (nmi) of KSC during the terminal count and plus-time periods obtain RF radiation clearance from the NOM. MIL receives clearance from the NASA Test Director (NTD).

2. Procedures for Station. The procedures for GN stations are as follows:

   (a) Houston CMD verifies station is receiving 32- or 72-kb/sec CMD stream.

   (b) Houston CMD request station to take the CMD system to operate mode.

   (c) Houston CMD requests station to enable CMD echo for CMD test.

(d) Houston CMD verifies lock on CMD echo.

(e) Houston CMD executes ULT CMD.

(f) On completion of CMD check, Houston CMD requests OPSR to disable CMD echo.

(g) Houston CMD advises OPSR and GC of CMD I/F test status.

b. TLM I/F Configuration

1. The station configures destination code 160 or as directed by DFE.

2. Data simulator/source tape input OD 96-/192-kb/sec TLM to PM signal generator on 2287.5 MHz at -90 dBm, and input to the data sync.

NOTE

MIL may flow pad data during I/F check.

3. Data simulator/source tape input OD dumps for I/F testing will be specified in the H-30 counts. The FM signal generator will be set to 2250 MHz at -90 dBm, and input to the dump monitor device.

NOTE

MIL will not be required to configure for dump data processing during the terminal count.

c. Tracking Data I/F

1. DFE requests MIL to acquire the collimation tower or establish a turnaround through the zero delay device and transmit High Sample Rate (HSR) data using a 245 octal destination router to MCC via GSFC NISN switch. MIL is required to transmit Low Sample Rate (LSR) data to GSFC using a DD destination router.

2. For 2-way on-orbit support, use a 245 octal destination router for HSR data (when/if required), and use a JJ destination router for LSR data.

3. DFE requests all C-band stations schedule for launch support, to go to Static Point 3 and output HSR data to ER/ROCC. On DFE cue, ER will select stations for output to MCC on 7.2-kb/sec circuits in the launch and landing format. DFE will verify data content and quality.

4. C-band stations required for on-orbit support will transmit Static Point 3 LSR data to MCC via GSFC NISN. DFE verifies data content and quality.

d. UHF A-G I/F. Com Tech makes voice checks with each station on the A-G 2 circuits only.

1. Houston Com Tech performs quindar keying and voice checks with each station having UHF capability.

2. Houston Com Tech conducts keying and voice checks with Dryden Com Tech on the four E&M signaling circuits.

1.2.3 Landing Count

1.2.3.1 Purpose

Identify and coordinate the activities of the ground data systems required to ensure that all required systems are configured and prepared to support landing. The landing counts for each mission will be provided by ISI.

1.2.3.2 Participants

Refer to Table 1-4 for callsigns and locations.

a. MIL.

b. MIL Com Tech.

c. ER/DOD Track.

d. Real-time Computer System (RTCS) Controller.

e. ER Radar Controller.

f. NOM.

g. Com Mgr.

h. SMM.

i. ND.

j. FDF.

k. Houston Voice.

l. DFE.

m. GC.

n. Houston CMD.

o. Houston Com Control.

p. Houston Com Tech.

q. Houston TV.

r. WR Mission Control Supervisor (MCS).

s. WR Mission Controller.

t. DFRC RCO, Technical Manager (TM), Com Tech (CT).

1.2.4 Summary of Space Network and Ground Network Anomalies Requiring Postmission Followup/Analysis Report

1.2.4.1 Purpose

Define the point of contact for, and the content of, the Summary of Space Network and Ground Network Anomalies Requiring Postmission Followup/Analysis Report.

1.2.4.2 Participants

a. SMM.

b. All Networks/Ranges.

1.2.4.3 Procedure

a. The SMM will transmit a summary of SN and GN anomalies requiring postmission followup/analysis. The report will be sent within 6 hours following Weight-On-Wheels (WOW).

b. The report will contain a list of anomalies which occurred during the mission that requires postmission investigation, analysis, and reporting. Each listing will contain the station and/or event and orbit, the problem, and the action to be taken. Examples of anomalies which could be included are low signal strength, computer failures, data dropouts, communications outages, and any problems not resolved during the mission. Refer to Section 16 for an example of this report.

1.3 Station Operations

1.3.1 Station Supervisor

1.3.1.1 Station Capability Reporting

a. Purpose. Keep NIC and MCC informed of station equipment status and configuration.

b. Participants. Refer to Table 1-4 for callsigns and locations.

1. MIL/PDL.
2. WPS.
3. GC.
4. SMM.
5. NOM.
6. DFRC TM.
7. ER/DOD TRACK.

NOTE

The ER/DOD Track performs the network I/F functions for WR, AFFTC, Kwajalein Missile Range (KMR), and ER.

c. Procedure. When a failure of mission-required station equipment occurs which directly affects support capability, MIL/PDL, WPS, and DFRC TM performs the following procedures:

1. Reconfigure to a backup mode (if available) as soon as possible.
2. Report by voice immediately to the NOM the equipment failure, support impact, corrective action, and Estimated Time of Return to Operations (ETRO).
3. When the problem is defined, transmit the appropriate status report in accordance with Section 16.

d. Handling HOLD Procedure For All Mandatory Instrumentation During the Terminal Count

1. If any instrumentation becomes RED (cannot support) prior to the MCC/JSC I/F in the terminal count, MIL/PDL, WPS, DFRC TM, or DOD TRACK will notify the NOM. The NOM will immediately advise the GC of this condition.
2. If any instrumentation becomes RED (cannot support) during the terminal count beginning with MCC/JSC I/F, MIL/PDL, WPS and DFRC TM will immediately advise the NOM and the GC over the Station Coordination (SITE COORD). DOD TRACK will advise the NOM over the Lead Range COORD. The NOM will advise the GC and SMM over the GC NOM COORD.
3. The information will include the site, instrumentation involved, and ETRO.

4. The GC will immediately advise the Flight Director who will make the decision whether to hold the launch. (It should be noted that only the Flight Director, Launch Director, or FCO are authorized to call a hold.)

5. If the systems involved are the responsibility of the DOD, the DOD TRK will immediately notify Goddard Operations (OPS) and DFE.

6. The MIL tracking station also has a requirement to support the KSC Test Director. MIL will request a hold in accordance with the criteria identified in the KSC Operations and Maintenance Instruction (OMI) in the event of loss of systems identified as mandatory support for launch.

7. When a capability is defined as mandatory, the hardware and software required to provide that capability assume a mandatory status also.

1.3.1.2 Station Readiness Testing.

STDN Station Readiness Test (SRTs) are conducted in accordance with *STDN Station Readiness Test for the Space Shuttle Orbital Flight Test (OFT)*, STDN No. 401.1/Space Shuttle OFT. SRTs for DOD, DFRC, and WFF are conducted in accordance with operating directives issued by the operating agency.

1.3.1.3 Radio Frequency Interference

a. Purpose. Report Radio Frequency Interference (RFI) which impacts mission support.

b. Participants. Refer to Table 1-4 for callsigns and locations.

   1. MIL.
   2. WPS.
   3. GC.
   4. NOM.
   5. DFRC TM.

c. Procedure

   1. At H minus 5 minutes, Station/Mission Controller ensures that all local signal sources of RFI are off and no outside interference is present.
   2. If RFI which degrades the performance of station systems is present during station view period, Station/Mission Controller and DFRC TM makes a verbal report of RFI to GC and transmits appropriate Administrative Message System (AMS) RFI message in accordance with Section 16.
   3. If RFI is present which affects Space Shuttle onboard operations and is considered detrimental by JSC, GC will advise the NOM who will take appropriate action.
   4. Refer to the 534-Station Interface Procedures Network Control Center/STDN for GN AMS reporting formats.

d. Management Policy and Reporting Hierarchy. Refer to the *Space Shuttle Program Radio Frequency Interference Management Manual*, 530-RFIMM/Space Shuttle, for management policies and reporting hierarchy.

Table 1-6. Launch Configuration (Note 1)

Station	PM UL Mode	OD DL Mode	FM DL Mode	Com Configuration
MIL	25K	05	22	Alpha (Note 2)
PDL	24K	03	22	Bravo
WPS	25K	05	22	Bravo

NOTE

1. Typical H/O times are as follows:

28.5 Degree Inclinations	39/51.6/57 Degree Inclinations
MIL to PDL L plus 1:20	MIL to PDL L plus 1:00
PDL to MIL L plus 2:30	PDL to MIL L plus 2:30
MIL to TDRS 7:30	MIL to TDRS 7:30

2. Use Alpha, until SRB ignition, then switch to Bravo.

3. OD DL modes are described in Table 4-1.

4. FM DL modes are described in Table 4-2.

5. PM UL modes are described in Table 4-3.

6. Com configurations are described in Section 14.

Table 1-7. Landing Configuration

Station	PM UL Mode	OD DL Mode	FM DL Mode	Com Configuration
MIL	25H	05	01	Lima
DFRC	24H	03	01	Hotel

Table 1-8. Orbit Configuration

Station	PM UL Mode	OD DL Mode	FM DL Mode	Com Configuration
DFRC	25H (Note)	11	13	Charlie
MIL	25H (Note)	11	13	Charlie
WPS	25H (Note)	05	13	Charlie
NOTE Stations will be configured in backup to TDRS mode unless otherwise directed.				

1.3.1.4 Liftoff Time Reporting

a. Purpose. Inform stations of scheduled and actual S/C Liftoff Time (LOT).

b. Participants. Refer to Table 1-4 for callsigns and locations.

1. GC.

2. OPSR.

c. Procedures

1. General. The prime time correlation of all STDN mission support activities is Greenwich Mean Time (GMT). All stations have one clock set to GMT. Stations with more than one clock may set other clocks at their own discretion.

2. Spacecraft LOT Reporting

(a) OPSR monitors SITE COORD during last 15 minutes prior to the start of the launch period for announcement of liftoff.

(b) OPSR monitors SITE COORD after S/C launch for announcement of actual LOT by GC. Stations also receive an AMS message containing actual GMT of LOT from GC.

(c) After LOT announcement, OPSR provides station operations personnel with corrected LOT so that S/C acquisition data is time biased accordingly. A LOT bias is normally only required for the first 1 hour 30 minutes of the mission; thereafter, MCC provides updated acquisition data for all active stations.

1.3.1.5 Ground Station Reporting Following Launch Abort Initiation

a. Purpose. This procedure documents the ground station reports necessary following the declaration of several launch phase abort scenarios.

b. Participants.

1. Houston GC.

2. Houston INCO.

3. Station Ops Supervisor.

c. Procedures

1. There are three types of Space Shuttle launch aborts where the vehicle will descend below the horizon much earlier than expected. This will require an off-nominal time for handover to TDRS East to maintain communications. This time is not easily predictable as it is a function of when the abort is called and the actual cause. These aborts are defined as:

(a) ECALs. Available on high inclination launches.

(b) BALs. Available on high inclination launches.

(c) Ditches. Available on any inclination launch.

2. Other launch aborts such as TALs, ATOs or RTLSs are not affected by this procedures since the vehicle goes LOS close to the nominal time.

3. In the event one of the aborts referenced in paragraph (1) is declared, Houston GC will inform all sites of the abort declaration on the SITE COORD loop.

4. In order to aid in predicting the optimum time for a handover to TDRS East, each site in view of the Orbiter should initially report its elevation angle when informed of the abort by Houston GC.

5. Following the initial report each site in view should report when its elevation angle reaches the following values and is decreasing:

   (a) 10 degrees.

   (b) 8 degrees.

   (c) 6 degrees.

   (d) 5 degrees.

   (e) 4 degrees.

   (f) 3 degrees.

   (g) 2 degrees.

   (h) 1 degree.

6. Each station should report LOS as appropriate. INCO will monitor SITE COORD and attempt to configure the vehicle to the TDRS mode following the roll maneuver from the nominal heads down attitude to heads up (allowing good antenna visibility of the TDRS satellite) but before LOS of all ground stations with both uplink and downlink capability. This procedure should result in maintaining communications with the vehicle to the largest extent possible.

1.3.1.6 S-band Pass Event Reporting

a. Purpose. This procedure describes normal and anomalistic events that must be reported during an S-band pass period. A pass is defined as starting at horizon break and ending at LOS plus 1 minute for the purpose of this procedure.

b. Participants. Refer to Table 1-4 for callsigns and locations.

   1. OPSR.

   2. MCC.

   3. DFRC TM.

c. Definitions. For the purpose of clarity and uniformity the following definitions are provided:

1. AOS. First indication of S/C RF.

2. Negative Contact. No DL RF signal detected from the expected vehicle at predicted horizon break.

3. LOS. RF (any DL) from the S/C has been lost.

4. Final LOS. All RF from the S/C has been lost at horizon set.

5. "Go for Command." Indicates a valid CMD UL status; the modulated CMD carrier is ON, station CMD system is operational and configured for Space Shuttle UL, CMD system is in the operate mode. "Go for command" implies that the station is also "go for voice."

NOTE

Typically stations will have SSO phase lock and Network Signal Processor (NSP) lock prior to the "go for command" announcement in the initial acquisition process; however, these indications are not required for a station to be "go for command." In the case where NSP lock cannot be confirmed after the second acquisition attempt, or the UL site does not have NSP lock verification capability, (refer to acquisition procedures, paragraph 4.3.2), the appropriate announcement would be "go for command but unable to confirm NSP lock." In the event NSP lock cannot be confirmed by the UL site, Houston CMD will respond with directions to the site or "Houston CMD verifies NSP bit and frame sync lock."

6. "Unable to Command." The station is unable to transmit CMDs due to either a ground station equipment failure, or ground station configuration problems. The station should provide details to GC or Houston CMD.

7. "Two-way Lock." Indicates coherent two-way lock has been confirmed by the station. Two-way lock is required when a station receiver has DL lock on the OD DL carrier and Space Shuttle receiver has valid UL lock on the PM UL carrier. The measured and expected Doppler should be equal. If, during the mission, the station is unable to confirm SSO phase lock by TLM indication (due to either a ground system or a Shuttle TLM failure), the appropriate announcement would be "(station) has two-way lock based on Doppler only, unable to confirm SSO phase lock by telemetry."

8. "Loss of Two-way Lock." Indicates that station TLM readout of Space Shuttle transponder phase lock is "out," a comparison of measured and expected Doppler indicates the DL signal is derived from the auxiliary oscillator, and no station problem exists. If the station loses two-way lock (resulting in a false lock condition) and the reason is due to a known UL interruption, such as keyhole,

masking, or station equipment malfunction, the appropriate announcement would be "(station) has false lock due to (reason) and is reacquiring." If the reason for the loss of two-way lock is not known, the appropriate announcement would be "(station) has loss of two-way lock, reason is not known, standing by for direction."

d. Procedures

1. Voice Announcements. The Station OPSR reports on SITE COORD all applicable events as listed in Tables 1-9 and 1-10. Table 1-9 consists of typical pass announcements and Table 1-10 consists of pass announcements concerning the UL/DL which may or may not be a result of any anomaly.

2. Voice Break-in Procedure. Stations use standard break-in procedures, as required, to report events or anomalies affecting station support.

3. Negative Reporting. Any other events not listed in Tables 1-10 and 1-11 are announced only if they affect station capability to support.

4. Acknowledgements. MCC acknowledges all voice reporting concerning ground system status and capability.

5. Abort. Stations supporting during an abort reentry of the Space Shuttle (resulting from early mission termination) report the following to the GC on SITE COORD:

   (a) One minute to LOS, based on OPSR estimate.

   (b) LOS.

   (c) Actual time (GMT) of LOS and azimuth at final LOS (when available).

6. Keyhole and Masking Reporting. The Station OPSR will report the following keyhole and masking problem to Houston CMD on SITE COORD at H-10: Any keyhole, terrain or obstruction masking that causes loss of support during the pass.

7. Range Delta Reporting. Station OPSR reports the difference between real and predicted range (range Delta) to Goddard Track.

Table 1-9. Tracking Pass Announcements (1 of 2)

Position	Shuttle Network System Announcements (Station Internal Loop)	Station OPSR Reports on SITE COORD
S-band/RF TLM	"(Spacecraft) AOS."	
OPSR		"(Station) has AOS."
S-band/RF TLM	Verify antenna angles. Antenna in autotrack.	
Exciter	Shuttle receiver lock confirmed	"(Station) has two-way lock."
S-band	Command modulation ON.	AFSCN/RTS: "(Station) has forward modulation applied."
Exciter	"Shuttle has NSP lock." (During asynchronous throughput the "go for CMD" will be based on two way Doppler).	"(Station) go for command."
S-band/RF TLM	No RF DL present at horizon.	"(Station) has negative contact."
Shuttle Forward Link (SFL)/Exciter	If the station is unable to transmit CMDs, determine and report reason.	"(Station) unable to command." (Report anomaly and ETRO.)
S-band	Verify autotrack on main beam. If antenna is on sidelobe, break track, reposition antenna, and reacquire autotrack.	"(Station) has side lobe track, reposition antenna."
		"(Station) has acquired the main beam>."
		"(Station) go for command." (During asynchronous throughput missions, no announcement.)
S-band	"Ranging is initiated."	"(Station) ranging is initiated."
S-band	Report is: no range turnaround is observed after ranging begins.	"No range turnaround observed."

Table 1-9. Tracking Pass Announcements (2 of 2)

Position	Shuttle Network System Announcements (Station Internal Loop)	Station OPSR Reports on SITE COORD
S-band	"Range acquisition complete, range Delta equals (XX) microseconds."	"(Station) range acquisition complete, range Delta equals (XX) microseconds."
S-band	Advise when station is within 30 seconds of receiving H/O and has not acquired PM DL.	"(Station) has not acquired the PM downlink, and is 30 seconds from handover."
S-band/TLM	Observe and report S/C downlinks. Announce OD DL bit rate changes.	"(Station) OD DL has (bit rate) modulation."
DFRC only	a. Announce presence of PM DL carrier and signal level.	"(Station) PM DL carrier AOS minus (signal level) dBm."
	b. Announce presence of Ops FM DL carrier and signal level.	"(Station) Ops FM DL carrier AOS minus (signal level) dBm."
	c. Announce intermittent lock or data dropouts.	"(Station) receiving intermittent data on (OD DL or FM DL), (signal level) dBm."
S-band/TV OPSR	Announce video modulation presence and signal quality.	"(Station) video AOS, (signal quality)."
S-band/TV OPSR	Report loss of video modulation.	"(Station) has loss of TV modulation."
S-band/RNG	Announce invalid ranging data.	"(Station) ranging data invalid. Range reacquisition in progress."
S-band	Announce antenna is approximately 30 seconds away from keyhole entry.	"(Station) is 30 seconds from keyhole."
S-band	Report antenna is entering keyhole.	"(Station) is entering keyhole."
S-band	Report when antenna is out of keyhole.	"(Station) out of keyhole."
S-band/RF TLM	Announce S/C signal LOS at horizon set.	“(Station) has final LOS.”

Table 1-10. MIL/PDL/DFRC/WPS Announcements for Loss of Carrier/Modulation

Position	Carrier/Modulation Loss/ Anomaly(Station Internal Loop)	Station Operation Supervisor Report on SITE COORD
S-band	Loss of PM DL carrier (DL signal level 150 dBm).	"(Station) has LOS of PM downlink carrier."
NOTE For unexpected LOS, the Operation Supervisor will make an announcement that describes the cutoff (e.g., sharp cutoff, fade-to-noise, etc.).		
S-band	PM carrier Doppler indicates auxiliary oscillator frequency. SSO frame sync on UL may or may not be valid.	"(Station) has loss of two-way lock. (Station) sees auxiliary oscillator downlink."
S-band/TLM	Loss of DL Pulse Code Modulation (PCM) data and voice on PM (ranging modulation still present on subcarrier).	"(Station) has loss of PM PCM modulation."
S-band/TLM	Loss of DL PCM data, voice, and ranging on PM (carrier only still present).	"(Station) has LOS of all PM downlink modulation."
S-band	Loss of DL ranging on PM (PCM data and voice modulation still present on baseband).	"(Station) has loss of downlink ranging modulation."
TLM	PM DL modulation present, no decom lock (random modulation with no frame sync).	"(Station) has PM downlink modulation present, unable to achieve frame sync lock."
S-band	Loss of the FM carrier.	"(Station) has LOS of FM carrier."
S-band/TLM	Loss of FM dump modulation.	"(Station) has loss of FM modulation."
S-band/TV	Loss of FM video (TV) modulation.	"(Station) has loss of video modulation."

1.3.1.7 UHF Pass Event Reporting

a. Purpose. This procedure defines voice announcements during UHF support.

b. Participants. Refer to Table 1-4 for callsigns and locations.

1. MIL/PDL.
2. WPS.
3. DFRC Com Tech.
4. Houston Com Tech.
5. GSFC Com Tech.

c. Definitions. For the purpose of clarity and uniformity, the following definitions are provided:

1. "Go for Voice." S/C horizon break as indicated in pointing data.
2. "Thirty Seconds to LOS." Announced 30 seconds before predicted horizon set as indicated in pointing data.
3. "Final LOS." S/C horizon set.

d. Procedures. The announcements are made to MCC on SITE COORD.

1.3.1.8 UL Carrier Handovers

a. Purpose. Define general procedures for conducting UL H/O.

b. Participants. Refer to Table 1-4 for callsigns and locations.

1. MIL/PDL.
2. WPS.
3. Houston CMD.

c. Procedures

1. General

(a) "Outgoing station" refers to the current UL controlling station and "incoming station" refers to the station receiving the H/O.

(b) When applicable, and unless otherwise directed by Houston Com Tech, MIL/PDL and WPS will ensure that the UHF A-G voice system is handed over at the same time as the S-band capability. For MIL/PDL H/O, the UHF A-G capability remains at MIL, except during high inclination launches.

(c) On completion of a H/O, a two-way station announces "(station) go for command."

2. UL Handovers. When MCC desires immediate H/O, it is directed verbally by Houston CMD on SITE COORD as follows:

   (a) Houston CMD announces "(outgoing station), (incoming station) standby for handover as soon as possible. Uplink mode XX required. Advise when ready for handover."

   (b) If a station is unable to accept the H/O, that Station will immediately advise Houston CMD and state the reason.

   (c) When stations advise that they are ready for H/O, Houston CMD announces, "Handover on my mark 5..4..3..2..1 mark."

3. Handover to/from TDRS. Refer to paragraph 1.3.1.16.

4. TLM Destination Code Changes. Refer to paragraph 1.3.2.

1.3.1.9 Ascent Phase UL Carrier Handover

a. Purpose. Define specific procedures for conducting a UL carrier H/O among MIL, PDL, and WPS during ascent phase.

b. Participants. Refer to Table 1-4 for callsigns and locations.

   1. MIL/PDL.

   2. WPS.

   3. Houston CMD.

   4. INCO.

   5. Houston Com Tech.

c. Procedures

   1. General

      (a) Degradation of the S-band PM DL to MIL is expected to be severe as a result of SRB exhaust plume. Degradation is expected to last from approximately launch plus 1 minute and 30 seconds through launch plus 2 minutes and 12 seconds.

      (b) Degradation of the S-band UL is expected to be less severe than the DL due to the higher transmit power from the ground.

      (c) Nominal launch will be 72-kb/sec UL through MIL/PDL. The 224-kb/sec prime CMD line (GKSC-61759) from GSFC to MIL/PDL and the 224-kb/sec backup line (GKSC-61859) to MIL/PDL will be used for 72-kb/sec UL. A 224-kb/sec CMD line (GWLP 59563) from GSFC to WPS will be used for the 72-kb/sec CMD.

2. Nominal Handover

(a) Due to the SRB plume effect on S-band communication during a UL, carrier H/O from MIL to PDL is planned at approximately launch plus 1 minute 20 seconds for low inclination launches and at launch plus 1 minute 0 seconds for high inclination launches.

(b) To regain two-way tracking data, a H/O back to MIL is planned at approximately launch plus 2 minutes and 30 seconds.

(c) For all inclination launches, MIL will perform a UL carrier H/O to TDRS at 7 minutes + 30 seconds. Prior to MIL LOS, the Orbiter will be commanded to the TDRS mode and MIL will confirm 'TDRS MODE' prior to dropping their carrier at Houston CMD direction. Refer to Table 1-15 for nominal H/O times.

3. Contingency Handover. UL carrier H/O will be accomplished if INCO determines that a UL carrier H/O is required at sometime other than the nominal. Houston CMD will direct MIL or PDL to hand over the S-band UL to PDL or MIL as soon as possible. (Houston CMD will not count down to H/O.)

(a) MILA to Wallops U/L Handover. INCO will determine that an U/L handover is needed due to a TDRSS spacecraft anomaly. JSC CMD will instruct MILA to handover to Wallops in the event of a TDRSS spacecraft anomaly.

(b) TDRS to Wallops U/L Handover. Should TDRS-47° fail after liftoff, TDRS East (41°) will require 15-20 minutes for scheduling prior to use (8-10 minutes to perform logistics of the emergency Scheduling Order (SHO) plus 7 minutes for SHO execution). During the TDRS outage, the U/L and the S-band PM link will be managed through Wallops (NHS, TCS, and DGS will be utilized as required).

4. MIL Initiated Handovers. Specific situations or station equipment failures necessitates that MIL conduct S-band UL carrier H/Os to and from MIL/PDL. MIL will initiate an S-band UL carrier H/O if station equipment failures occur while MIL or PDL is two-way with the SSO. MIL will report the action to GC on SITE COORD

1.3.1.10 H Minus Time I/F Activity

a. Purpose. Defines testing and I/F counts performed by MIL/PDL/WPS, DOD stations, JSC/MCC, and NIC.

b. Participants. Refer to Table 1-4 for callsigns and locations.

1. GC.

2. NOM.

3. Com Mgr.

4. Houston Voice.

5. MIL/PDL and WPS.

6. WPS.

7. DFE.

8. Houston CMD.

9. Houston Com Tech, Houston Com Control.

10. Station Com Tech.

11. Houston TV.

12. Station TV.

13. Earth Station TV Tech.

14. GSFC TV.

15. ER DOD Track.

16. DFRC TM, RCO, Com Controller.

17. GSFC TLM.

18. GSFC CMD.

19. GSFC Com Tech.

20. GSFC Track.

c. Procedures

1. General

(a) Stations are required to interface with the NIC and MCC prior to initial AOS of a support period. Applicable portions of the SRT must be completed prior to the initial I/F.

(b) After postpass playback is complete, stations will support an H-15 I/F with the MCC at approximately 15 minutes prior to AOS. The H-15 I/F is included in the applicable H-35 count.

(c) GSFC/JSC will interface directly with the stations for all pre-pass checks, data flows, pass briefings, and pass activities.

2. Interface Count Description. I/F count descriptions are as follows:

(a) Table 1-11, MIL/PDL/DFRC/WPS Station H-35 Interface.

(b) Table 1-12, TV H-30 Interface.

(c) Table 1-13 , C-band H-45 Interface and Pass Time Reporting.

(d) Table 1-14, Typical GN Postpass Activities.

1.3.1.11 Typical Station Support Count

a. Purpose. Provide a quick reference for typical station support during pass and postpass activities.

b. Participants. Refer to Table 1-4 for callsigns and locations.

   1. Station.

   2. MCC.

c. Procedures

   1. General. Station activities for all systems are consolidated into one support count.

   2. Support Activities

      (a) Typical GN prepass activities are described in the STDN I/F (Tables 1-11 through 1-13), normally at H-35 minutes.

      (b) Tracking pass announcements are listed in Table 1-9.

      (c) Typical GN postpass activities are listed in Table 1-14.

Table 1-11. MIL/PDL/DFRC/WPS Station H-35 Interface (1 of 4)

Time	Callsign	Sequence	Action
H-35	Goddard NOM/ Goddard CMD/ Com Mgr VC/Goddard Com Tech	1	a. Com Mgr confirm lines established between GSFC and stations. Station circuit-switch receive, configured to NIC transmit as requested by Goddard CMD to NIC F26 or F27. IP data line from station configured for NIC F100. b. Voice control configure A-G circuits for UHF A-G checks (if requested by Goddard Com Tech).
	Goddard NOM Station/VC	2	Goddard NOM request Voice Control add station to NIC interface loop. NOM conduct voice and status check, Station confirms receipt of acq data and systems loaded for Space Shuttle support as directed by the latest Software Support Instructions (SSI) and mission ISIs.
	Goddard CMD/ Station	3	a. Confirm CMD system is configured for the JSC 32-kb/sec LDR UL with the CMD system in the safe mode, code on, status on (ascent); or code off, status on for orbital or landing support. Confirm destination 273 (octal) selected for both status and echo blocks. b. Confirm all systems are initialized with the applicable vehicle ID, flight ID, and destination codes. c. S-band carrier is up at mission power level and radiating into the coll tower/zero delay device, with modulation on (except DFRC).
H-32	Goddard CMD/ Station	4	a. Station enables status and CMD echoes. Take CMD system to operate. b. Goddard CMD perform CMD check and verify status via CMD echo and status. c. Station take CMD equipment to safe mode.
	Goddard CMD/ Station	5	a. Reconfigure CMD system for 72-kb HDR UL Code on, status on (ascent); or code off, status on for orbital or landing support.

Table 1-11. MIL/PDL/DFRC/WPS Station H-35 Interface (2 of 4)

Time	Callsign	Sequence	Action
H-32 (cont)			b. Station take CMD system to operate mode and confirm lock on incoming CMD stream. c. Goddard CMD perform CMD checks and verify status via CMD echo and status.
	Goddard CMD/ Station	6	Goddard CMD give station GO/NO GO for command interface. Station disable command echo and return CMD system to the safe mode. Select destination code 214 (octal) for echo and destination code 105 (octal) for CMD site status.
H-30	Goddard Com Tech/ Station Com Tech	7	Perform A-G keying and modulation checks on UHF A-G circuits.
	Goddard Track/ Station	8	a. For interface, unless directed otherwise by Goddard Track, configure for Low-Speed Data (LSD) to DD and High-Speed Data (HSD) to 020. At completion of interface configure for real time. Orbital Only: If scheduled for 2-way support enable LSR tracking data with JJ destination code. For scheduled 3-way or backup support, use a DD destination router. b. Disable HSR/LSR data.
	Goddard TLM/ Station	9	a. Set test injection level, enable the test signal into the RF loop at -90 dBm unmodulated. Goddard TLM confirm mode: (1) 192-kb/sec DG FMT 143, or SIM tape (2) 192-kb/sec DG FMT, 143 demultiplex to 128 kb/sec, or SIM tape (3) 192-kb/sec DG FMT 173, or SIM tape (4) 96-kb/sec DG FMT 144 or SIM tape b. Enable the data input of OD dump (960 kb/sec or as advised) to the FM signal generator 2250 MHz, at -90 dBm. Verify good path on station.
	Goddard TLM/ Station	10	On cue from Goddard TLM, enable the TLM data, verify data quality, and confirm data leaving station. Goddard TLM trap a frame and confirm message type, contents, and destination code.

Table1-11. MIL/PDL/DFRC/WPS Station H-35 Interface (3 of 4)

Time	Callsign	Sequence	Action
H-25	Goddard TLM/ Station	11	Disable TLM data and enter destination code 160. Enter destination 105 for SSMs.
H-20	Goddard NOM/ Station	12	NIC interface complete. Station configure for sequence 16.
	Goddard NOM/ Voice Control/ Com Mgr	13	Notify Voice Control to configure station to SITE COORD and A-G circuits to MCC. NOM advise Com Mgr that NIC interface complete.
	Goddard NOM/ Houston GC	14	Notify GC that station is ready to start interface.
	Houston Com Control	15	Com Control request Com Mgr configure JSC MDM port to station.
	Houston Com Tech/Station Com Tech	16	Perform A-G longline level checks, keying, and modulation checks on UHF A-G.
H-15	Houston CMD/ Station	17	a. Confirm station ready for CMD interface. b. S-band RF carrier on at mission power, radiate into antenna pointing at zenith, with modulation on. c. Station command systems to operate. Enable command echo's to destination 214. d. Houston CMD execute ULT and verify via CMD echo. e. Houston CMD give the Station GO/NO GO on the command interface. f. Station disables CMD echo. Keep CMD equipment in operate.

Table 1-11. MIL/PDL/DFRC/WPS Station H-35 Interface (4 of 4)

Time	Callsign	Sequence	Action
	Houston DFE/ Station	18	a. DFE request Station enables OD telemetry to destination code 160 and status to 105.
			b. DFE give Station GO/NO GO on telemetry interface.
			c. Station disable TLM data.
			d. Station remove test signals from the RF loop.
	Station/Houston CMD	19	Report LOS due to high elevation, keyhole, or masking as required.
H-10	Station/Houston DFE		No telemetry action interface between passes unless otherwise requested
H-8	Station	20	All antennas to IP to AUX/IPT, program, or manual mode and confirm with Station.
	UHF A-G	21	Slave antenna to best source.
	Station	22	Radiation restrictions are in effect. Do not radiate through the antenna until H-2 or as specified.
H-5	Station/ Site Com Tech	23	a. Reconfigure station systems for AOS.
			b. Verify that all local signal sources are off and no RFI is present.
	Station/DFE	24	a. Confirm that all prepass checklists are complete.
			b. Enable TLM to destination code 150 and SSMs to destination code 105, or as directed by DFE.
H-2	Station/ Houston CMD	25	Carrier up at mission power unless otherwise indicated.
	Com Tech	26	Enable voice.
	Station/ Houston DFE	27	DFE confirm receipt of HSR/LSR tracking data.
H-1	Station	28	Announce on internal loop "one minute to AOS, all recorders to flight speed."

Table 1-12. MIL/DFRC Station TV H-30 Interface (1 of 2)

Time	Position	Sequence	Action
H-30	Com Mgr Station TV Tech	1	a. Com Mgr confirms TV conference established.
	GSFC TV		b. Confirms satellite video/audio lines configured.
H-28	GSFC TV Station TV Tech	2	a. Verify video and audio levels and quality on systems 1 and 2. b. Verify Vertical Interval Test Signal (VITS) and Vertical Interval Reference Signal (VIRS) on lines 10, 14, 15, 20, and 21. c. If no pass is in progress, performs RF turnaround test with multiburst signal through system 1. NOTE If RF turnaround is not immediately available, process Vertical Interval Data Detector (VIDD) test video with interleaved audio. d. On cue from GSFC TV, select processed (frame synchronized) system 1 video 1, then video 2 followed by system 2 video 1, then video 2 on output line. e. GSFC TV verify video levels and VITS/VIRS on lines 10, 14, 15, 16, 17, 18, 20, and 21 as appropriate. Verify digitized interleaved audio present for VIDD test data.
H-21	GSFC TV Station TV Tech	3	Configure with Houston TV interface to perform test video signal checks on both systems.
H-20	Houston TV Station TV Tech GSFC TV	4	a. GSFC TV I/F completed. GSFC TV notifies Houston TV that station is ready for interface. b. Monitors VIDD test video.
			c. Verify VIDD test video VITS on lines 14, 15, 16, 17, and 18 on both systems. d. Verify digitized interleaved audio present on both systems. e. Verify readings with GSFC TV against Houston TV data.

Table 1-12. MIL/DFRC Station TV H-30 Interface (2 of 2)

Time	Position	Sequence	Action
H-16	Houston TV/ Station TV Tech	5	Perform RF turnaround test (if no pass is in progress) with a multiburst signal through both systems.
H-14	Houston TV/ Station TV Tech	6	a. Verify video and audio levels and frequency response on both systems. b. Verify VITS/VIRS levels and quality on lines 10, 20, and 21. c. Verify proper station ID on line 10 of both fields.
H-12	Houston TV/ Station TV Tech		a. On cue, TV Tech switch to color bars (split field if possible) through both systems. b. Verify proper phase and levels.
H-10	Houston TV/ Station TV Tech	7	a. Reconfigure the RF system for AOS. b. Houston TV will inform TV Tech as to which systems to use for upcoming pass. TV Tech will process system test video with a 1-kHz tone to Houston TV.
H-9	Houston TV	8	Perform desired measurements on VITS/VIRS and confirm proper equipment operation.
H-5	Houston TV/ Station TV Tech	9	TV Tech confirm to Houston TV that proper audio levels from Houston Voice is verified per Table 25-1, TV DL Minus 27 procedures.
H-2	Houston TV/ Station TV Tech	10	a. TV Tech announce "AOS minus 2 minutes." b. Houston TV notify TV Tech of remoting A-G 1, A-G 2, or UHF. TV Tech configure and confirm.
H-1	Station TV Tech	11	Start VTRs and stand by for AOS.
NOTE H-20 and H-10 I/Fs are included in this count.			

Table 1-13. C-band H-45 Interface and Pass Time Reporting

Time	Position	Sequence	Action
H-45	DOD Track Radar Control C-band Station	1	DOD Track, Radar Control, and C-band Station confirm: a. System status. b. Interrange Vector (IRV) Date-time Group (DTG). c. IRV quality. d. AOS time.
H-35	DOD Track C-band Station DFE	2	DOD Track Confirm 46-character Static Point 3 data on line. Confirm Q bit on and LSR data on line for MCC track I/F test as requested.
H-30	DFE DOD Track C-band Station	3	DFE verify radar(s) data quality.
H-2	DOD Track DFE C-band Station	4	DOD Track confirm 46-character horizon point data on line. DFE confirm receipt of data.
H-1	Site Radar Tech C-band Station	5	Radar Technician turn on recorders.
AOS	C-band Station DOD Track DFE	6	C-band Station announce AOS.
LOS	C-band Station DOD Track DFE	7	C-band Station announce LOS.
LOS +5	DFE ROCC DOD Track C-band Station	8	DFE/Range Operations Control Center (ROCC) confirm receipt of good data or request a playback. Site passes the weather to DOD Track.
LOS +15	DOD Track C-band Station DFE	9	Confirm next tracking requirements with C-band Station.
LOS +30	C-band Station DOD Track DFE	10	C-band Station transmit AMS tracking summary message to JSC, GSFC, ROCC, and others as required. DOD Track confirm receipt.

Table 1-14. MIL/PDL/DFRC/WPS Station Postpass Activities

Time	Position	Sequence	Action
LOS + 1 min	Station	1	a. Disable all TLM data lines/ports. Disable CMD SSMs (unless otherwise directed). b. Inhibit voice remoting (if applicable). c. Confirm all recorders are off, and CMD system is safed. d. Modulation is off and carrier is down. Tracking data is terminated.
	DFE/Station	2	Advise station of playback requirements; if no requirements, station reconfigure for next pass.
LOS + 3 min	DFE/Station	3	If playback is required, station configure for playback.
	Station		a. Destination Code 160 or as directed by DFE. b. Message Type 243.
LOS + 5 min	DFE/Station	4	DFE request Station enable TLM and start playback.
LOS + 30 min	DFE/Station	5	a. On completion of playback, disable all TLM data lines/ports. b. Station reconfigure for next pass. NOTE Reenable CDM SSMs prior to the next H-10.

1.3.1.12 Reporting of Spacecraft Anomalies

a. Purpose. Inform MCC of S/C anomalies.

b. Participants. Refer to Table 1-4 for callsigns and locations.

1. SMM.
2. NOM.
3. GC.
4. MIL/PDL.
5. WPS.
6. DFRC TM.

c. Procedures

1. Each system supervisor informs the Operation Supervisor of any S/C anomalies observed from his area as follows:
   (a) Space Shuttle not in the nominal mode.
   (b) Space Shuttle not using nominal PM frequencies.
   (c) Improper or no modulation on DLs.
   (d) Apparent, unexpected Space Shuttle S-band carrier frequency shifts.
   (e) Non-nominal signal levels.
   (f) Space Shuttle receiver will not acquire PM UL.
   (g) No Space Shuttle ranging turnaround (MIL only).
2. The Operation Supervisor verbally reports the anomaly in real time to the GC, followed by a S/C vehicle anomaly report to the NOM and GC. Refer to Section 16 of this Network Operations Support Plan (NOSP) for the message format.

1.3.1.13 Prelaunch/Ascent Contingency Procedures

a. Purpose. Define specific procedures for MIL/PDL and WPS during prelaunch and ascent phase.

b. Participants. Refer to Table 1-4 for callsigns and locations.

1. GC.
2. Houston CMD.
3. INCO.
4. Houston Com. Tech.
5. DFE.
6. Station Com Tech (MIL/PDL and WPS).
7. Station (MIL/PDL and WPS).
8. SMM.
9. Goddard Ops.
10. GSFC Voice.

c. Procedures. The following procedures will be implemented if the defined failure occurs after the designated time prior to launch, at which time it becomes impossible/impractical to hold the countdown. For failures occurring prior to the designated time, normal reporting and restoral procedures will be implemented. Refer to Table 1-15 for nominal TLM Processor (TP) configuration for MIL, PDL, and WPS.

1. Range Safety and Status, Ascent Failures

   (a) In event of a KG28 failure, the following priority will be established:

      (1) L-0 to T+1:20 - MIL and PDL.

      (2) T+1:20 to T+2:30 - PDL and MIL.

   (b) If Range Safety-1 fails, inform the GC and configure the backup Range Safety-3.

   (c) If Range Safety-2 fails, inform the GC and configure the backup Range Safety-3.

   (d) If PDLs OD fails, the backup will come online and provide status.

   (e) If MILs KG84-1 fails, inform the GC and switch to KG84-2.

   (f) If PDLs KG84-3 fails, inform the GC and switch to KG84-4.

   (g) If MIL Range Safety 2.4-kb/sec line (021) fails, switch to backup 2.4-kb/sec line (023).

   (h) (h) If PDL Range Safety 2.4-kb/sec line (020) fails, switch to backup 2.4-kb/sec line (023).

2. Telemetry

   (a) OD TLM Data for MIL/PDL. MIL/PDL will be provided with best source selection and hot backup capability. Best source selection will be provided by the Data Quality Monitor (DQM) system. If an OD data blocker fails during ascent, MIL will switch to the backup blocker. Inform MCC of the failure, and status of the switchover.

NOTE

The default best source select deadband (3) and debounce (2000 ms) values will be used, unless otherwise directed by the GC.

Table 1-15. Nominal Prelaunch/Launch Configuration

Time	Station	Source	Data Type	Prime	Backup	Range Safety
Prelaunch through LOS	MIL	MIL	OD 192 kb/sec	Blocker	Blocker	NA
	MIL	MIL/ JDMTA/WPS	Range Safety	R/S	R/S	MIL/WPS
	PDL	PDL	OD 192 kb/sec	Blocker	Blocker	NA
	PDL	PDL	Range Safety	Range Safety	Range Safety	PDL switch to TDRS at H/O
	WPS	WPS	OD 192 kb/sec	WFEP	WFEP	NA

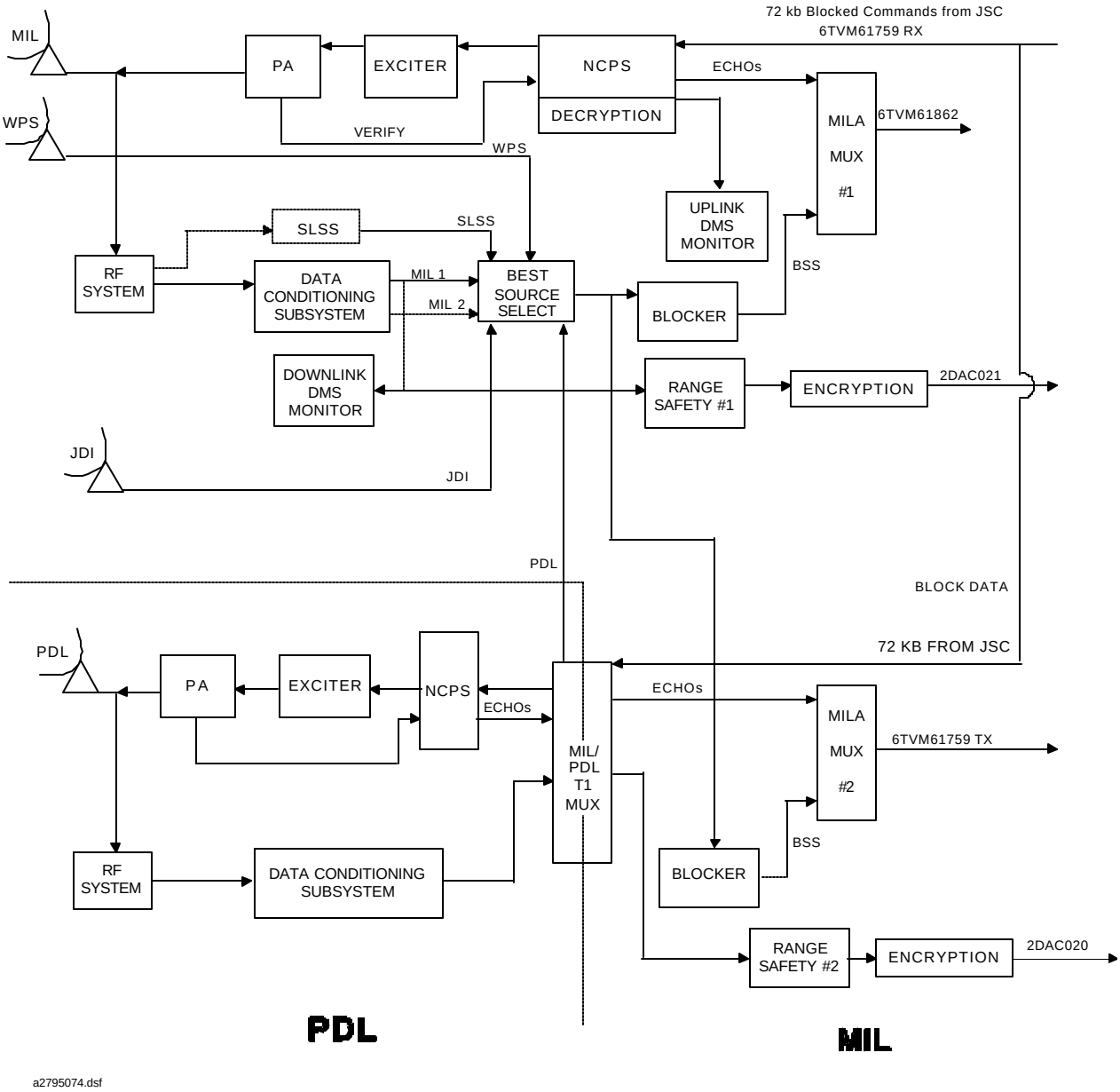

Figure 1-8. MIL/PDL Prelaunch/Launch Configuration (Simplified Block Diagram)

3. CMD

(a) MIL NCPS. If the MIL NCPS fails during the ascent (prior to PDL H/O), MIL will immediately report the failure to the MCC and switch to the hot backup NCPS. (Houston CMD will not count down to H/O.)

NOTE

MILA/PDL will configure the station NCPS systems as follows:

1. To minimize the impact of a Prime Command system failure during the Space Shuttle launch support MILA will configure the 9 Meter-1/NCPS-1 and the PDL NCPS to the Prime Command line.
2. MILA will then configure the 9 Meter-2/NCPS-2 to the Alternate Command line.
3. In case of a failure of the prime command line while MILA is the active uplink, MILA will handover to MILA system 2 (the backup string) and the PDL NCPS will be switched to the alternate command line.

(b) PDL NCPS. If the PDL NCPS fails during the ascent phase, and if PDL is two-way with the vehicle, the failure will be reported immediately to the MCC, and PDL will perform an early H/O to MIL.

(c) WPS/NCPS. If the WPS NCPS fails during the ascent, the failure will be reported immediately to the MCC, and the backup NCPS system will be configured to the RF system.

4. CMD High-Speed Data Lines (HSDLs)

(a) MIL and PDL. MIL and PDL will share the same CMD line. Two CMD lines will be extended to MIL/PDL from the MCC. The prime CMD line will be the GKSC 61759 line (224 kb/sec) capable of 72-kb/sec CMD stream. If this line fails, inform the MCC immediately, and configure the MIL and PDL NCPS to the backup 224-kb/sec line.

(b) WPS. WPS has one 224-kb/sec CMD line available for reception of a 72-kb/sec CMD stream. If this line fails on ascent, inform the MCC immediately and stand by for instructions.

5. TLM HSDLs

MIL/PDL. Best-source select will make the same data available on both the MIL and PDL 224-kb/sec line. MILA and Comm Mgr/CD Mgr will coordinate the transition to the backup services.

6. S-band Antenna/Power Amplifier (PA)/Exciter/S-band Tracking Processor System (STPS) MIL

(a) If the prime antenna, PA, exciter, or STPS fails during ascent, the failure will be reported immediately to the MCC, and if two-way with the vehicle, MIL will perform H/O to PDL.

(b) MIL will reconfigure to support with the backup antenna and RF system, and notify MCC when complete.

NOTE

1. The decision to handover S-band UL to MIL or TDRS will be made by JSC in real time.
2. If a STPS failure occurs and only tracking data is affected, a decision will be made by JSC in real time whether restoral is necessary.

7. S-band RE MIL. If the MIL RE fails during ascent, MIL will maintain two-way lock with the vehicle and perform an early H/O to TDRS on Houston CMD direction.

NOTE

If the MIL RE failure occurs, ranging data is lost; however, JSC will continue processing Doppler (may or may not be valid) and angle data.

8. S-band Antenna/PA/Exciter (PDL)

(a) If the PDL S-band antenna fails while two-way with the vehicle, MIL will attempt to go two-way at the earliest possible time.

(b) If the PDL PA fails while two-way with the vehicle, PDL switches to the second PA and exciter.

(c) If the PDL exciter fails while two-way with the vehicle, PDL reconfigures to the second PA and exciter.

(d) If the PDL antenna, PA, or exciter fails prior to the planned H/O from MIL to PDL, the UL will be maintained at MIL.

1.3.1.14 Return to Launch Site Abort

In the event of a RTLS abort, the handover from MIL to TDRS will not be performed. MIL will stay on the Orbiter through landing at KSC. The Orbiter will remain in Ground Spaceflight Tracking and Data Network (GSTDN) mode. At L + 14 min, MIL will perform a handover from MIL Sys No. 1 to MIL Sys No. 2 for all flights.

1.3.1.15 GN Support in a Backup-to-TDRS Configuration

a. Purpose. Define the procedure for stations supporting in a backup-to-TDRS configuration.

b. Participants. Refer to Table 1-4 for callsigns and locations.

1. OPSR.
2. NOM.
3. GSFC Voice Control.
4. DFE.

5. Houston Com Tech.

c. Procedures

1. Those stations which have mutual view periods with the TDRS may be required to support the Space Shuttle in a backup-to-TDRS configuration.

2. Perform the station readiness test as specified in paragraph 1.3.1.2.

3. Complete the appropriate H-minus count activity prior to each scheduled pass.

4. Houston Com Tech will coordinate with GSFC Voice Control to configure A-G longlines.

5. Nominal pass support requirements are identified in Tables 1-6 through 1-8, but may be changed verbally in real time.

6. All station equipment must be configured to provide active support in the event of real-time H/O from TDRS. Refer to paragraph 1.3.1.15 for H/O procedure.

7. Stations will use destination code 160 when station is configured for backup TDRSS support unless otherwise directed by the DFE.

1.3.1.16 TDRS/GN S-band H/Os

a. Purpose. Describe the procedure for S-band H/Os between TDRS-STDN, and TDRS-SGLS.

b. Participants. Refer to Table 1-4 for callsigns and locations.

1. MCC.

2. OPSR.

c. Procedures. Although H/Os are normally scheduled, real-time H/Os may be performed. The Orbiter will be configured for STDN, TDRS, or SGLS mode by CMD Salvo, stored program commands, or onboard panel commands.

1. General

(a) H/Os will be performed in accordance with paragraphs 1.3.1.8 and 4.3.2.4 at Houston CMD direction.

(b) DFE will coordinate TLM lines on/off and Houston Com Tech will coordinate with GSFC Voice Control to configure A-G longlines.

2. Unscheduled H/Os, GN-to-TDRS

(a) Houston CMD will advise the outgoing station on SITE COORD of an unscheduled H/O to TDRS and time to drop carrier.

(b) A-G longlines will not be reconfigured at GSFC and TLM lines will remain on for remainder of pass.

(c) OPSR will make applicable voice announcements on SITE COORD.

(d) DFE will coordinate TLM lines on/off and change of destination code to 160, or as required.

(d) DFE will coordinate TLM lines on/off and change of destination code to 160, or as required.

3. Unscheduled H/Os, TDRS-to-GN

(a) Houston CMD will advise the incoming station on SITE COORD of an unscheduled H/O from TDRS, furnishing the carrier on time and UL modes.

(b) DFE will coordinate DL configuration TLM lines on with destination code 150 entered.

(c) Houston Com Tech will coordinate with GSFC Voice Control to confirm A-G longlines to MCC for the required communication configuration.

(d) Station will perform normal acquisition procedures and OPSR will make applicable voice announcements on SITE COORD.

1.3.1.17 ET Impact Area Notification

a. Purpose. Defines the method, in accordance with the launch count, for the MSC to notify the Australian CAA RCC of the impact area for the ET. At launch minus 30 days the JSC RS Group generates the nominal ET disposal data for a specific mission. This data is provided to the 45th Space wing (45SW) at the Eastern Range which generates the NOTAM (Notice to Airmen). GSFC supplies the NOTAM via email to local elements, Australia and New Zealand point of contact. At launch minus 7 days the JSC GC provides a "Predicted Impact Point" notification message to the STS Network Director and STDN Mission Manager.

b. Participants:

1. SMM.

2. NOM.

3. GC.

4. Australian CAA.

c. Procedure. JSC is responsible for providing the SMM with the ET impact area predict coordinates. Once received, the SMM forwards these coordinates to the Australian CAA-RCC, which notifies the appropriate civil aviation and marine agencies of the ET impact area.

1. General

(a) The SMM will notify the Australian CAA via the designated American Telephone and Telegraph Company (AT&T) phone located in the MSC.

(b) The CAA phone numbers are:

(1) Primary: 613-0235-7420.

(2) Secondary: 613-9235-7402.

(3) Fax No. 613-9235-2744.

2. Pre-launch Notification

   (a) Per the launch count at L-1 hour, the JSC GC will contact the SMM via the GC/NOM COORD voice circuit.

   (b) The GC will provide the latest ET impact area predict coordinates to the SMM.

   (c) The SMM will contact and provide the Australian CAA "Search and Rescue Officer" with the latest ET impact area predict coordinates.

3. Post-launch Updates

   (a) Per the launch count at approximately L+10 minutes (post-MECO), the GC will contact the SMM via the GC/NOM voice circuit.

   (b) The GC will provide a Change/No Change status of the ET impact area predict coordinates to the SMM.

   (c) The SMM will contact and provide the Australian CAA Search and Rescue Officer with the Change/No Change status to the ET impact area predict coordinates.

4. Launch Abort. If a Space Shuttle launch abort occurs, the SMM will immediately notify the Australian CAA Search and Rescue Officer of the launch abort.

NOTE

If the SMM is unavailable during the STS launch support, the NOM will be tasked with making the call to the Australia CAA and informing them of the ET impact area predict coordinates.

1.3.2 Telemetry Destination Codes

a. Purpose. Identify the TLM and SSM destination codes to be used for I/F tests, normal support, and playback.

b. Participants. Refer to Table 1-4 for callsigns and locations.

   1. MIL/PDL.

   2. WPS.

   3. DFE.

   4. NOM.

   5. DFRC TM.

c. Procedure

   1. The Destination code for two-way support will be 150_8. GN stations will use destination code 160_8 for I/F tests and three-way support unless otherwise directed by DFE.

2. Stations having overlapping coverage will reconfigure their Remote Site Data Processor (RSDP) destination code at the H/O time. The outgoing station enters destination 160_8 at H/O and the incoming station enters destination code 150_8. At MILs initial interface with JSC during the launch terminal count, JSC OD data will be routed to MIL and will remain in this configuration throughout the mission.

3. The destination code for playbacks will be 160_8, unless otherwise directed by DFE.

4. Refer to Section 5 for destination codes.

1.3.3 Command

1.3.3.1 UL Data Rate Change via MIL/PDL

a. Purpose. Define coordination required for UL data rate changes.

b. Participants. Refer to Table 1-4 for callsigns and locations.

1. MIL/PDL Ops Supervisor(s).

2. GC.

3. Houston CMD.

4. NCPS Tech.

c. Procedures

1. General. The nominal on-orbit configuration is the HDR mode.

2. Coordination

(a) Houston CMD coordinates the CMD data rate change with MIL/PDL Ops Supervisor(s). Station data rate change must follow MCC CMD which switches the onboard configuration.

(b) Houston CMD announces "Stand by to change uplink data rate to low." After MCC CMD is verified, Houston CMD announces to MIL/PDL Ops Supervisor(s)"Go to low data rate and HEADER ACCEPT."

(c) Houston CMD reports data rate changes to GC.

(d) The NCPS operator confirms LDR HEADER ACCEPT has been selected, and NCPS is in operate and locked on CMD stream. The station confirms the Delta Modulation System (DMS) is configured for 32 kb/sec.

1.3.3.2 CMD System SAFE/OPERATE Configuration

a. Purpose. Define station procedures for control of the safe/operate modes on the CMD system.

b. Participants. Refer to Table 1-4 for callsigns and locations.

1. MIL/PDL Ops, WPS Ops, DFRC TM.

2. Houston CMD.

c. Procedures. The following applies to the CMD system:

1. The CMD systems are normally kept in the SAFE mode.

2. The CMD systems will be set to the OPERATE mode during the H-15 I/F and will remain in OPERATE throughout the pass for two-way support.

3. The CMD systems will be set to the SAFE mode immediately after turning off the carrier, or as otherwise directed.

NOTE

In the event of RF verify errors following "Go for Command," it may be necessary to perform restart verification.

1.3.3.3 CMD Circuit Restoration

a. Purpose. Define procedures to be used to restore commanding from MCC to GN stations in the event of a CMD line outage. (PDL does not apply when outage occurs during on-orbit operations.)

b. Participants. Refer to Table 1-4 for callsigns and locations.

1. MIL/PDL Ops, WPS Ops, DFRC TM.

2. GC.

3. Houston CMD.

4. Comm Mgr.

5. GSFC Tech Control.

6. Comm Control.

c. Procedures

1. MIL and PDL. MIL and PDL share the same CMD 224-kb/sec line (circuit-switched) for 72-kb/sec CMD rate. There is a backup available for this line via NASA Integrated Systems Network (NISN) 2000. However, for the 32-kb/sec CMD rate, there are two 56-kb/sec (circuit-switched) lines available. The two circuits are not normally configured to route 32-kb/sec CMD data from GSFC to MIL and are not used for JSC CMD circuit restoration. There is no interface to PDL for 32/kb/sec.

2. DFRC and WPS. DFRC and WPS have NISN 2000 (224-kb/sec) backup which can be used for 32- or 72-kb/sec commands.

1.3.3.4 Shuttle Forward Link (32/72 kbps Commands) Data to KSC/RPS

a. Purpose. Define station procedures for Shuttle Forward Link (SFL) data during the STS mission.

b. Participants: Refer to Table 1-4 for call-signs and locations.

1. MILA Operation Supervisor.
2. Houston CMD.
3. KSC/RPS (Record and Playback System).
4. Houston GC.

c. Procedures:

1. General. JSC is required to provide all real-time mission data (OD PCM telemetry and 32/72 kbps uplink commands to the LCC/RPS).
2. Coordination:

(a) JSC will be required to send SFL data (32/72 kbps commands) to KSC/RPS, via MILA, throughout the mission. MILA will be required to de-block and decrypt commands prior to routing them to KSC/RPS. (Note: This will preclude any command checks by GSFC after launch). KSC/RPS is required to record all shuttle forward link data 24 hours a day (pre-launch thru post-landing) during all Space Shuttle missions.

(b) GSFC will check out both forward link systems (9-meter 1 and 2) during the MILA pre-launch interface checks. After the forward link checks have been completed, JSC will send the SFL to KSC/RPS, via MILA, for recording until landing plus two hours. (Note: MILA sends commands to KSC/RPS until two hours after landing or until JSC INCO's requirement is fulfilled).

1.3.4 Communications

1.3.4.1 Tone Keying Failure (UHF)

a. Purpose. Define procedure for a tone keying receiver failure.

b. Participants. Refer to Table 1-4 for callsigns and locations.

1. CAPCOM.
2. Houston Comm. Tech.
3. Goddard Voice.
4. GC.
5. MIL/PDL Ops, WPS Ops.
6. Station Comm Tech.
7. DFRC Comm Tech/DCC.

c. Procedures

1. General

(a) The Station Comm Tech notifies Houston Comm Tech of a tone keying failure. Houston Comm Tech will then direct the use of manual key procedures. For manual key (UHF), the Station Comm Tech will manually key the UL as required. If the situation permits, he should investigate the problem; otherwise, the following procedures apply (a typical script is: "Columbia, Columbia, this is Houston, over.").

(b) MCC gives the Orbiter callsign twice. At the first announcement of the callsign, the Station Comm Tech keys the UL locally.

(c) The Station Comm Tech releases the UL key when MCC announces "over."

2. Release Failure. If the tone keying receiver fails to release, the Station Comm Tech should locally release the tone keying when the CAPCOM completes the transmission.

1.3.4.2 Postlanding Support from DFRC

a. Purpose. Define the process and points-of-contact for ensuring a continuous Space Shuttle data flow between DFRC and KSC.

b. Participants

1. GSFC:

(a) NOM.

(b) Comm Mgr.

(c) CD Mgr.

(d) Goddard Voice.

2. JSC:

(a) GC.

(b) DFE.

3. DFRC TM.

4. MIL.

5. KSC Landing Recovery Director (LRD).

c. Procedures

1. Dryden is responsible for the recording and remoting of postlanding Space Shuttle data to JSC and KSC (via MIL), both RF and umbilical cord, during the period from WOW through landing plus 12 hours. DFRC also has the responsibility for the remoting of postlanding data to KSC (via MIL) until Space Shuttle power down (approximately 105 hours).

2. The NOM will ensure good data and voice circuitry exists for continuous postlanding support between DFRC, GSFC MSC, JSC, MIL, and KSC. The NOM will have Goddard Voice bridge the KSC Operational Intercommunications System (OIS) 135 (LRD COORD) channel (extended from MIL to a predesignated voice circuit) at landing minus 1 hour.

3. At NOM direction Comm Mgr/CD Mgr will configure MIL to receive 192-kb/sec OD R/T on the GKSC-61759 IP and the GKSC-61862 IP circuits. Comm Mgr/CD Mgr will also configure MIL to receive the Ops recorder dump on the GKSC-05963.

4. DFRC will playback the 960-kb/sec Ops recorder dump at 960-kb/sec via LPA 0103 (SCD 1 or 2, port 2).

5. After the JSC R/T OD and P/B data requirements have been met (approximately landing plus 4 hours), Comm Mgr/CD Mgr will reselect the prime SCD (Port 3) output to destination code 305 (octal) Most Significant Bit (MSB), upon direction of the NOM.

6. The NOM will transfer responsibility of postlanding support to the Comm Mgr at approximately L + 6 hours and will brief all supporting entities of this transfer.

7. DFRC and MIL will report all problems, anomalies, and status to the GSFC Comm Mgr on Site Coord as necessary. In the event the station experiences a problem that would require assistance of the NOM, the Comm Mgr will contact the NOM.

8. The NOM will obtain a daily status from the GSFC Comm Mgr prior to the daily briefing of the Network Director.

9. At termination of all data, DFRC will notify MIL and the Comm Mgr that data has been terminated. The Comm Mgr will notify the NOM who will in turn release all supporting facilities from Space Shuttle mission support.

1.3.4.3 Contingency Landing Communications

a. Purpose. Define communications requirements in the event of a contingency landing.

b. Participants. Refer to Table 1-4 for callsigns and locations.

1. GC.
2. SMM.
3. Houston Voice.
4. GSFC Comm Mgr.
5. DOD Track/Support Operations Center (SOC).

c. Procedure:

1. GC will advise SMM and DOD Track of a contingency landing at the designated site.
2. In the event of a landing at one of the designated Contingency Landing Sites (CLSs) (refer to Table 1-1), three dedicated longlines that terminate at the DOD Manager's Space Shuttle Contingency Support Office (DDMS) SOC at PAFB are extended by the DDMS to the appropriate CLS communication lines. Commercial circuits may be used where necessary.
3. GSFC Comm Mgr will provide assistance as required, in establishing restoral/additional circuits as the need arises, using available NISN faculties.

1.3.5 Range Safety

1.3.5.1 Purpose

Define the Range Safety support for Space Shuttle missions.

1.3.5.2 Participants

Refer to Table 1-4 for callsigns and locations.

a. FCO.

b. ER/CMD Controller.

c. ROCC.

d. MIL/PDL.

1.3.5.3 Procedures

a. ER will provide continuous Range Safety CMD capability from liftoff to SRB separation; then ER will monitor the flight through Main Engine Cutoff (MECO). The CMD receivers are located on the two SRBs. To provide the necessary coverage, ground stations at CCAFS and JDI will be used. The CMD systems are controlled and their performance is monitored at the ER/ROCC. All CMD data is generated and encoded at the ER/RCC under the direction of the FCO.

   1. Two Full Duplex (FDX) 2.4-kb/sec (redundant) circuits are provided between the ER/ROCC and each station.

   2. Redundant digital Range Safety equipment is provided at each station.

   3. Two RF transmission systems are provided at each station.

   4. Two FDX voice circuits are provided between the ER/ROCC and each station.

   5. These elements of the CMD system are arranged to provide two (redundant) strings, operating and checked out, for CMD capability from ER/ROCC through each station. The selection of the prime and backup string will be made at the ER/ROCC. When all equipment and circuits are operating properly, both strings will be available for use on selection by the CMD Controller at the ROCC.

b. TLM. ER/ROCC will receive, via MIL, selected TLM parameters extracted from OD DL TLM. The parameter extraction and processing will be accomplished at MIL. The launch support station at PDL will receive OD DL and transmit data to MIL.

   1. MIL will receive and decommutate OD DL TLM data, extract the required parameters, format the parameters for transmission, and transmit the formatted data to ER at 2.4 kb/sec from prelaunch to LOS. MIL receives OD DL from PDL and WPS decommutates OD DL TLM data, extracts the required parameters, formats the parameters for transmission, and transmits the PDL and WPS formatted data to ER/ROCC at 2.4 kb/sec (over a second circuit). MIL will transmit the 192-kb/sec OD DL as received at PDL or MIL to TEL-4.

   2. JDI will receive the Space Shuttle OD DL and transmit the complete 192-kb/sec data stream to TEL-4.

   3. TEL-4 will extract the Flight Control parameters from the JDI 192-kb/sec data stream and select the best data (JDI decom or TEL-4 decom). This data will be

transmitted to the ROCC for Range Safety use. Prior to JDI AOS, TEL-4 will process the 192-kb/sec OD DL as received from MIL, and transmit the Range Safety parameters to ER/ROCC.

4. ER/ROCC will select and process a set of TLM parameters received from MIL and provide data for the required displays for the FCO in the ROCC.

c. S-band Tracking Data. ER will receive S-band tracking data from MIL for trajectory determination. MIL will acquire S-band tracking (range, Doppler, and angles) data, format the data in the Minimum Delay Data Format (MDDF), and transmit the data to ER at 2.4 kb/sec from prelaunch to LOS.

d. C-band Tracking Data. ER will receive C-band radar beacon/skin tracking data from scheduled C-band radars at WFF (on high-inclination launches), PAFB, MIL, and CCAFS. Radars are to be scheduled so that at least two sources of radar data will be available from liftoff to ET jettison.

1. WFF, when scheduled, will acquire C-band skin tracking data using the FPQ-6 and the FPS-16 radars. These tracking data will be transmitted to the ER at 2.4 kb/sec. Two of the three radars will be transmitted in real time. The format will be MDDF. Data transmission will start at launch minus 9 minutes and will continue to LOS plus 2 minutes.

2. ER radars will acquire C-band skin tracking data and transmit their data to the ER/ROCC.

3. ER/ROCC will receive ER radars tracking data for source selection and trajectory determination.

4. Refer to Figure 8-9 for additional information.

e. Trajectory Determination. The ER/ROCC will compute the trajectory of the Space Shuttle/ET/SRB based on selected data from the following sources:

1. S-band tracking data.

2. C-band tracking data.

3. Space Shuttle guidance vectors.

4. Optical trackers.

NOTE

The computed trajectory will be used for the generation of trajectory displays in the ROCC for the FCO.

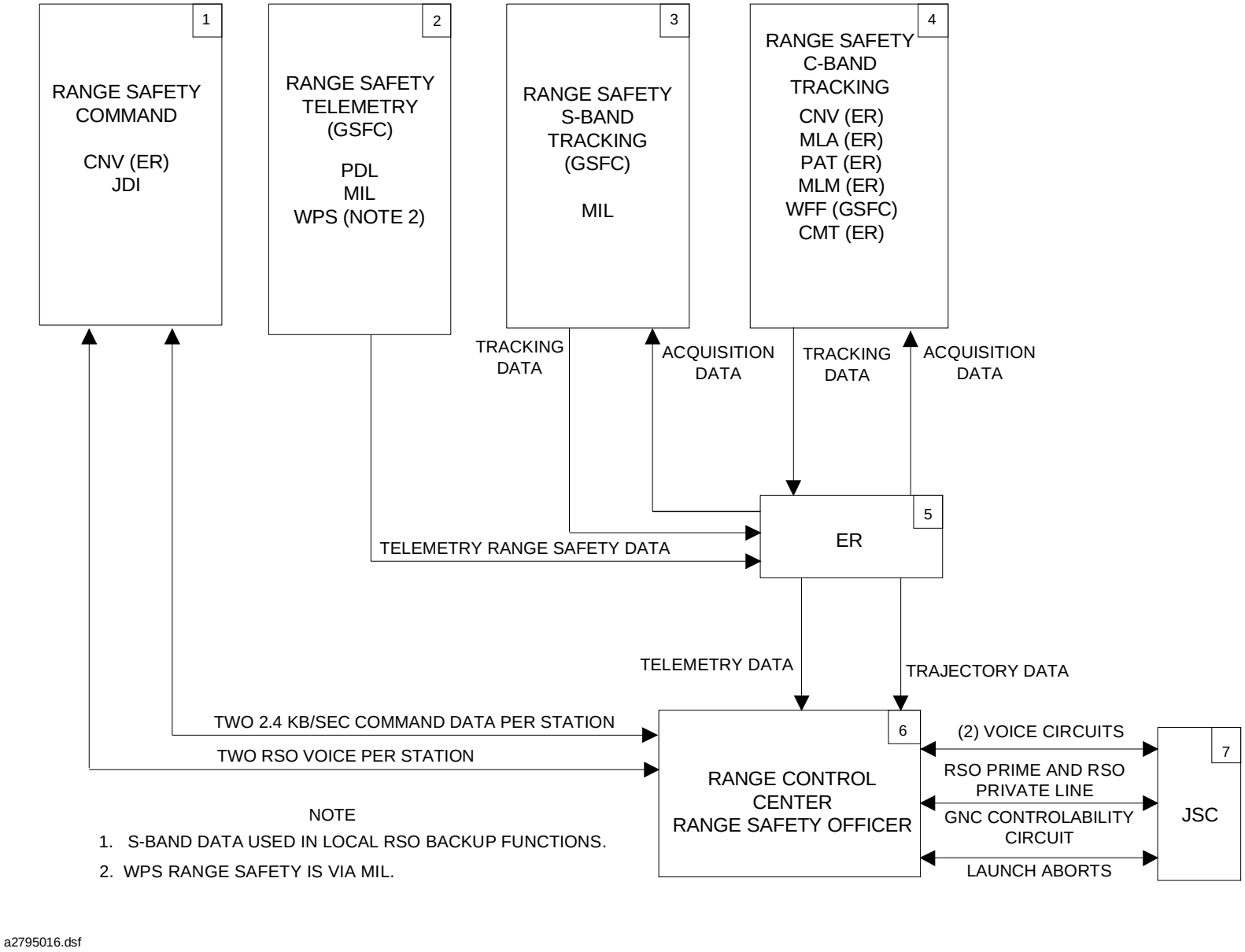

Figure 1-9. Space Shuttle Range Safety Support

1.3.6 Meteorological Interactive Data Display System

1.3.6.1 General

a. The Meteorological Interactive Data Display System (MIDDS)-II is a complex, highly interactive, hardware and software system based on imbedded computer designed to acquire, monitor, store, retrieve, reformat, manipulate, and display weather related data. It will enable a forecaster to build a display base by blending satellite and conventional data obtained from a variety of sources into a visual format through interactive manipulation.

b. The WFF supports the MIDDS by receiving Meteosat data, blocks the data, and retransmits the data in NISN 4800-bit block to JSC via a 224-kb/sec circuit. Figure 1-10 is a diagram of the WFF MIDDS data flow.

c. The JSC weather station is located in Building 30 and operated by the National Oceanic and Atmospheric Administration (NOAA) for NASA. This station receives weather data from various locations (i.e., Wallops, CCAFS, MSFC, EAFB, etc.), processes the data and makes it available to the station forecasters in the support of Space Shuttle launches on orbit and landings. The JSC weather station is the focal point of the entire MIDDS system.

d. NISN circuit requirements are discussed in Section 8.

1.3.6.2 MIDDS Fault Isolation Procedure (Meteosat Data)

a. Purpose. The purpose of this procedure is to define the process and points of contact for fault isolation of the MIDDS system (WPS only).

b. Participants

1. GSFC:

   (a) STDN Mission Manager (SMM).

   (b) Com Mgr.

2. JSC:

   (a) Ground Controller (GC).

   (b) Facility System Manager (FSM).

   (c) Houston Com Control.

3. WPS: Shift Supervisor.

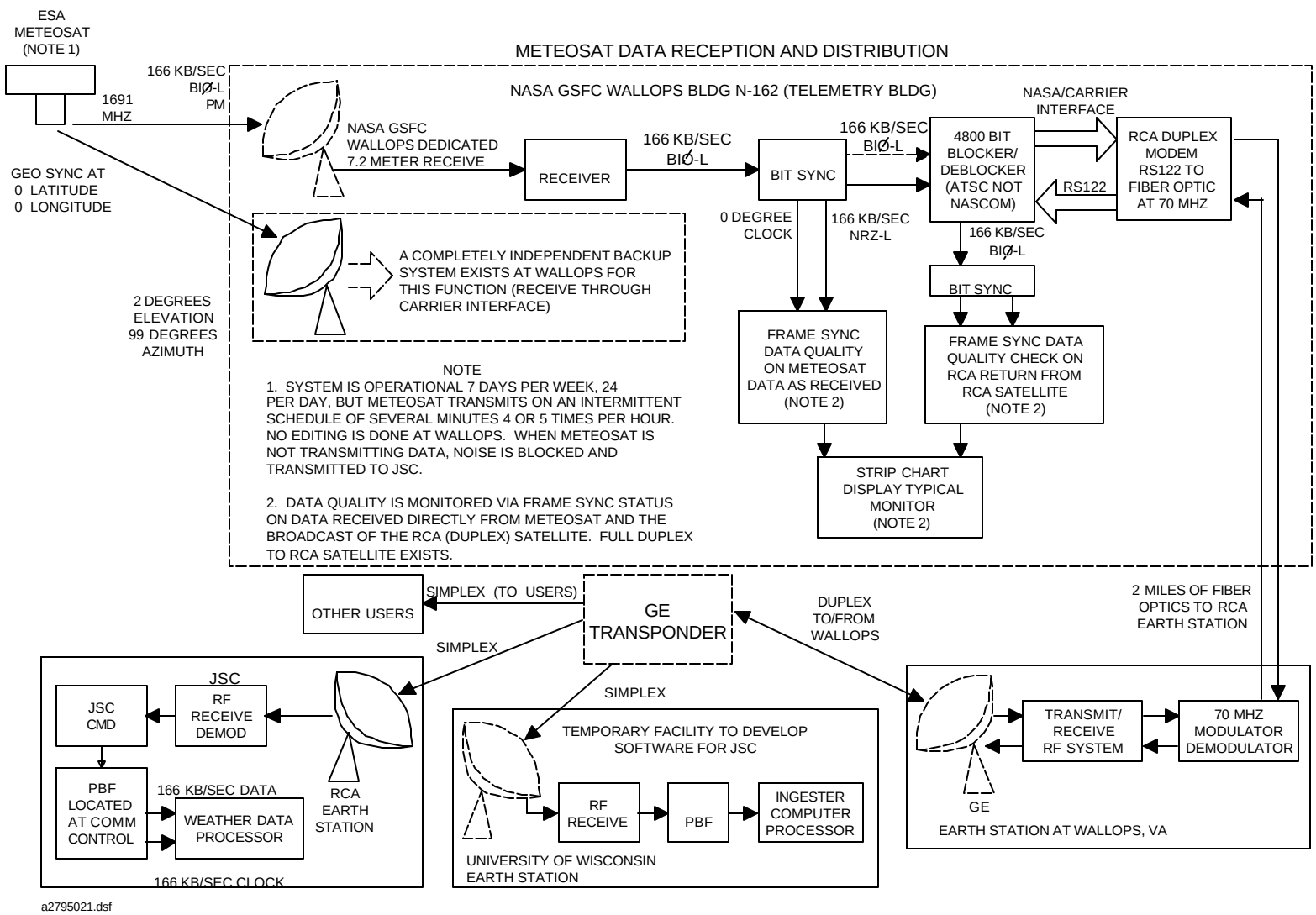

Figure 1-10. WFF MIDDS Data Flow

c. Procedure. The SMM will be the focal point for notification and information concerning MIDDS problems during Space Shuttle operations. If a problem occurs (i.e., loss of data at JSC), the GC will notify the SMM of the problem with as much information as possible. The SMM will notify the WPS shift supervisor via GSFC Voice Control (or dial ext. 7-2375) of the problem. WPS will determine if the data is leaving WPS and confirm the quality of the data with JSC. If it is determined the problem is a NISN problem, WPS will notify the Com Mgr. The GSFC Com Mgr will ensure the problem is reported to the carrier (GE AMERICOM) for resolution. The Com Mgr will notify the SMM and WPS of status and final resolution. The SMM will notify affected users. Once the problem is resolved, the NOM will be notified of the action taken to restore MIDDS service, and the affected area will submit a problem report.

NOTE

GSFC has no ability to see/process MIDDS data.

1.4 Radio Frequency Interference

Refer to the *Network Control Center and Spaceflight Tracking and Data Network Station Interface Procedures*, 451-SIP-NCC/STDN V1, Section 2 for station RFI procedures.

1.5 Station Configurations

Station equipment is configured in accordance with Figures 1-11 through 1-19. Nominal station configuration descriptions are shown in Figures 1-12 through 1-19. The station configurations descriptions are as follows:

Figure	**Description**
1-11	TV Support Configuration for Space Shuttle (DFRC and MIL)
1-12	DFRC Support Configuration
1-13	MIL Launch Configuration
1-14	PDL Launch Configuration
1-15	MIL Orbital Configuration
1-16	MIL Landing Configuration
1-17	WSMR UHF/VHF Configuration
1-18	WPS Launch Support Configuration
1-19	WPS Orbital Support Configuration

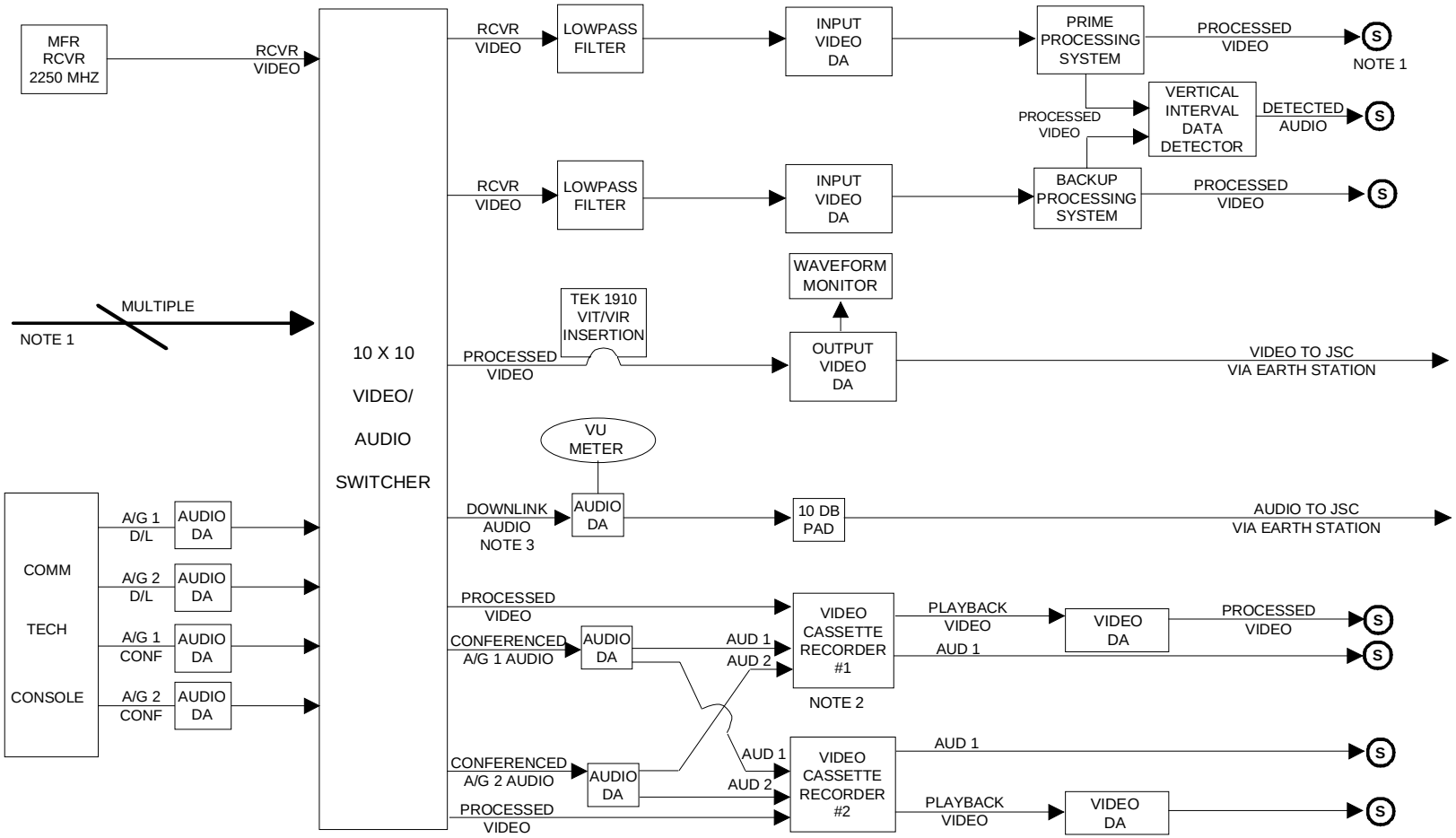

NOTES

1. THESE SELECTED OUTPUTS ARE ALSO ROUTED BACK AS INPUTS TO THE VIDEO/AUDIO SWITCHER.

2. IF A VCR IS REQUIRED TO RECORD RAW FILTERED VIDEO, DIRECTIONS WILL BE GIVEN BY HOU/TV.

3. IF D/L AUDIO 2 IS REQUIRED FOR REALTIME REMOTING. HOU/TV WILL DIRECT STATION DURING H-MINUS COUNT.

Figure 1-11. TV Support Configuration for Space Shuttle (DFRC and MIL)

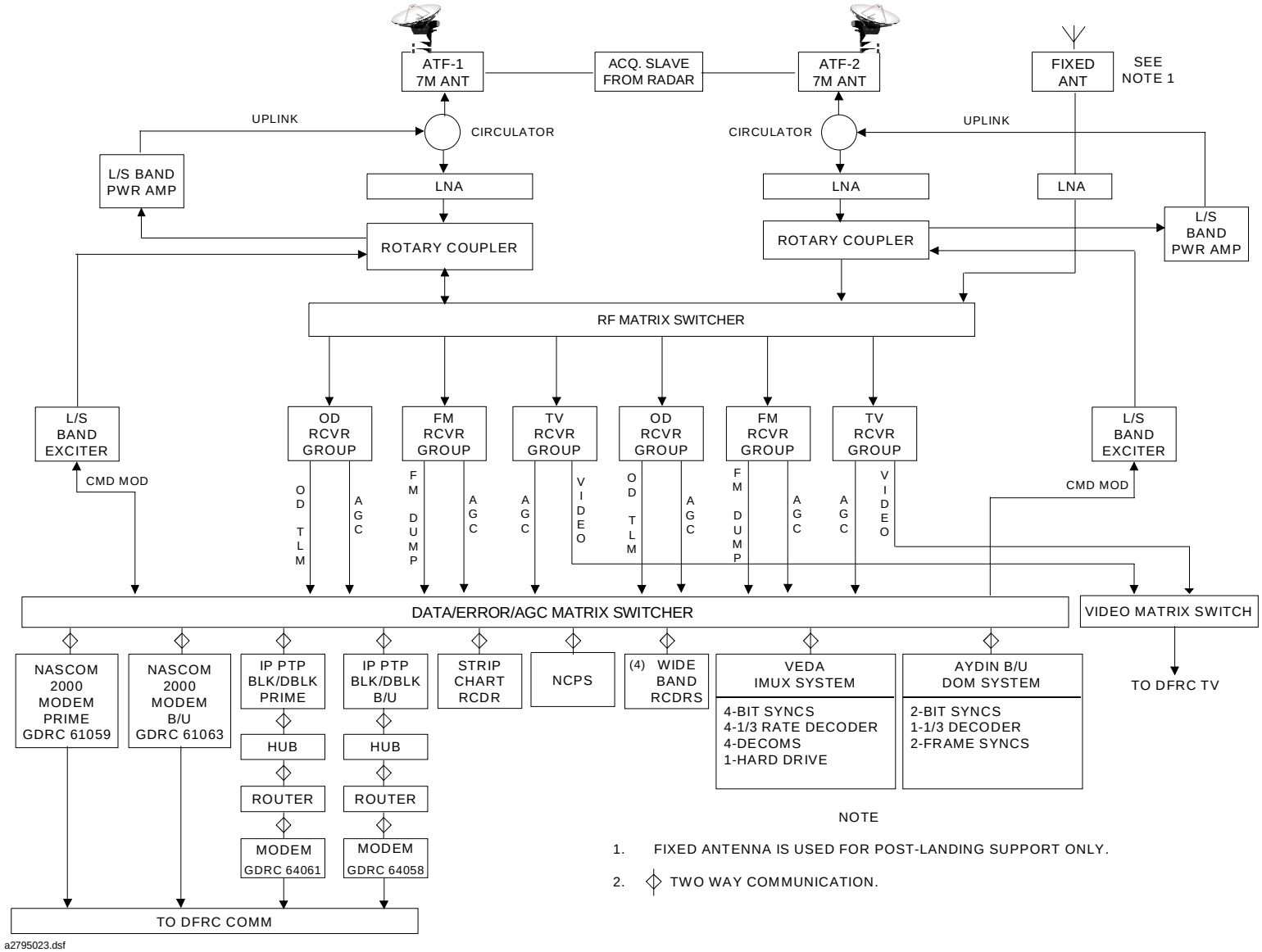

Figure 1-12. DFRC Support Configuration

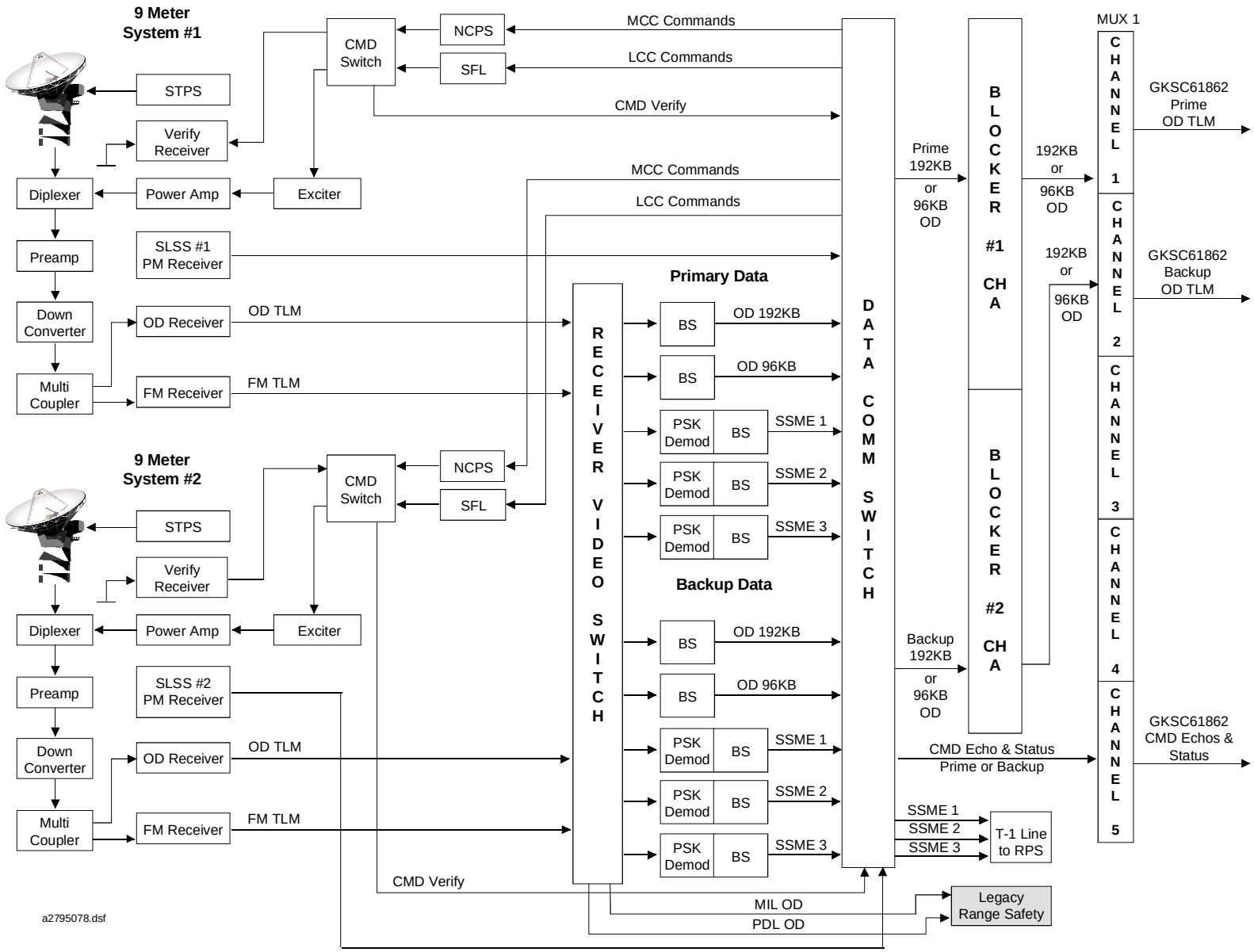

Figure 1-13. MIL Launch Configuration

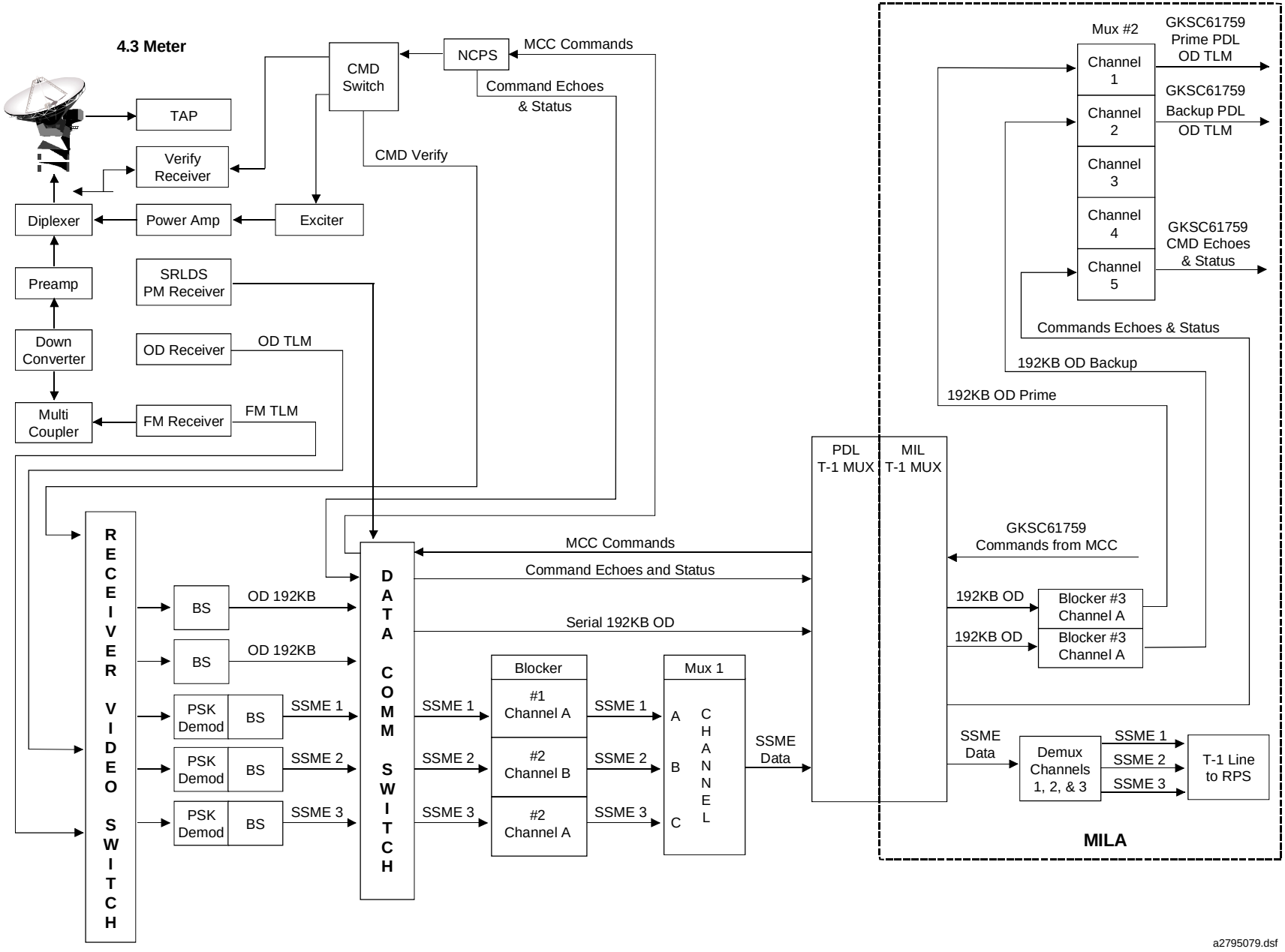

Figure 1-14. PDL Launch Configuration

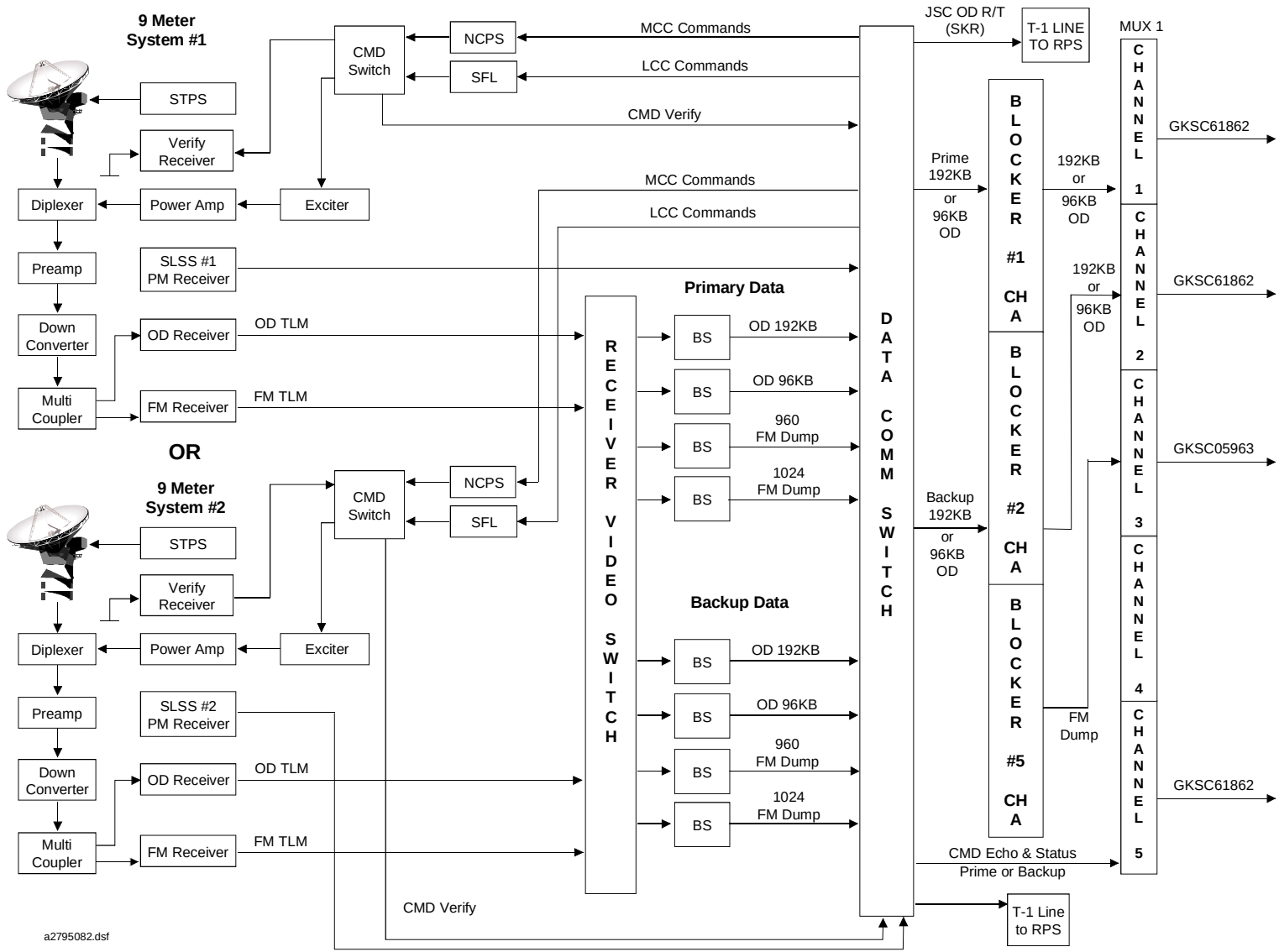

Figure 1-15. MIL Orbital Configuration

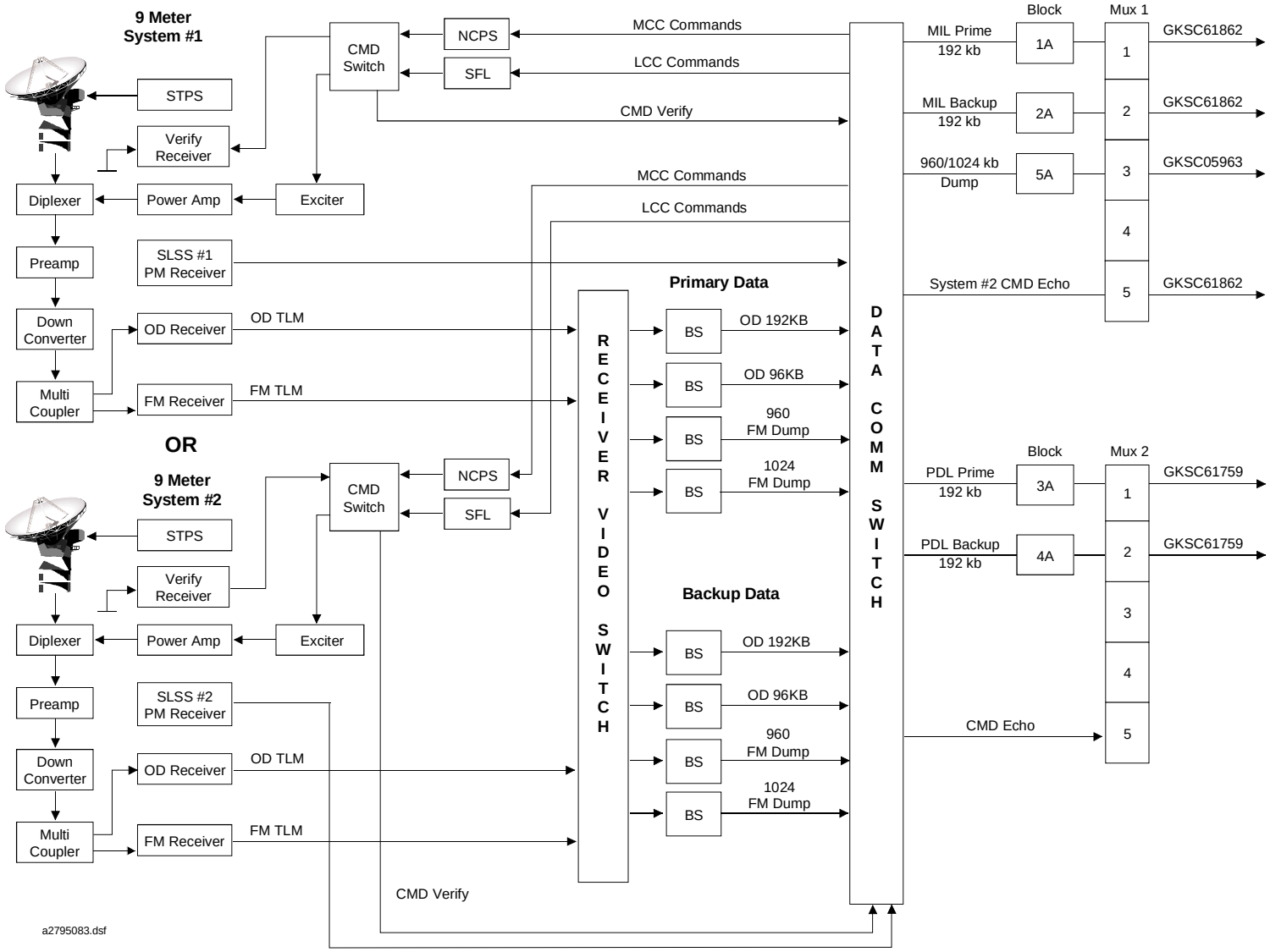

Figure 1-16. MIL Landing Configuration

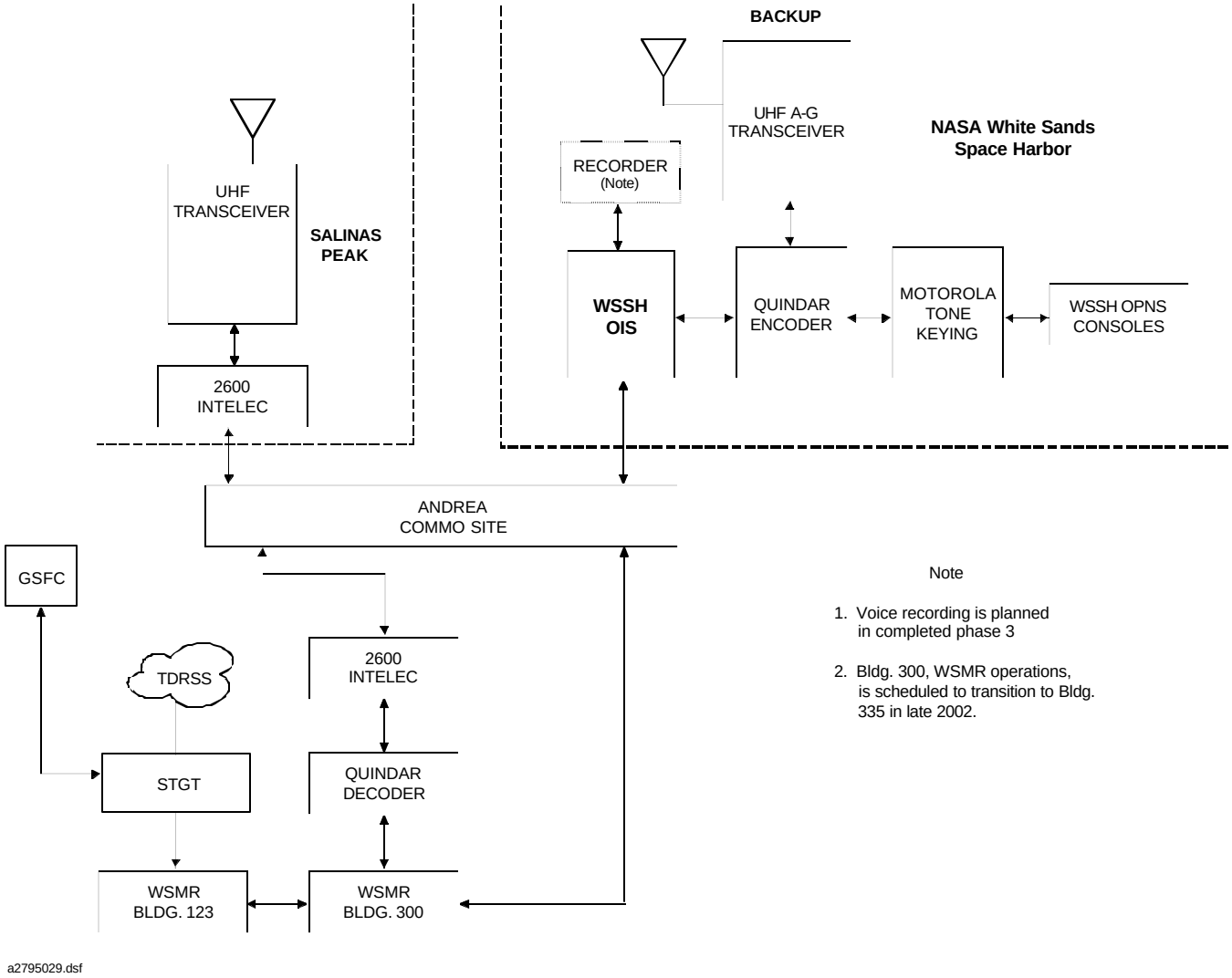

Note

1. Voice recording is planned in completed phase 3

2. Bldg. 300, WSMR operations, is scheduled to transition to Bldg. 335 in late 2002.

Figure 1-17. WSMR UHF/VHF Configuration

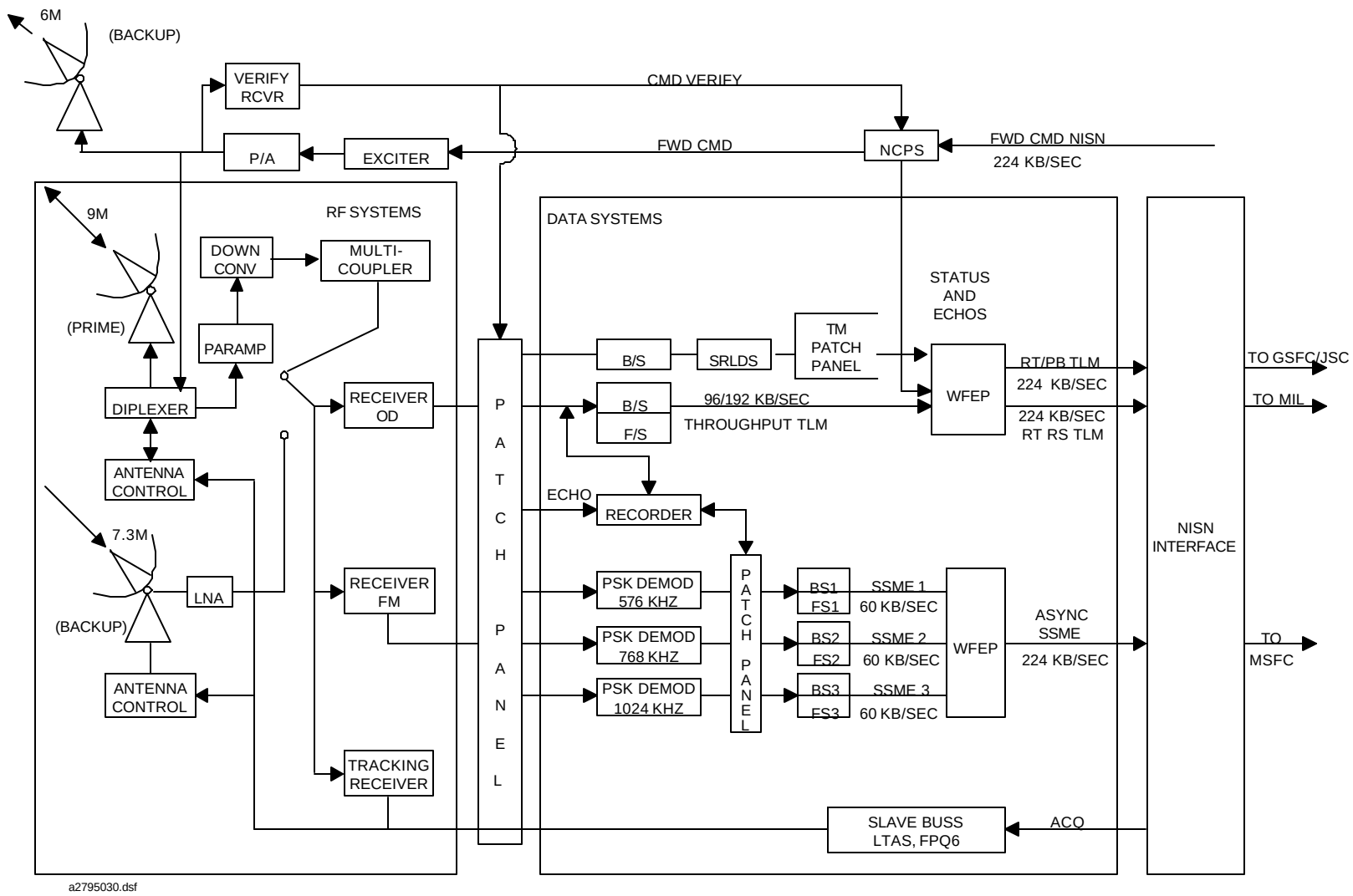

Figure 1-18. WPS Launch Support Configuration

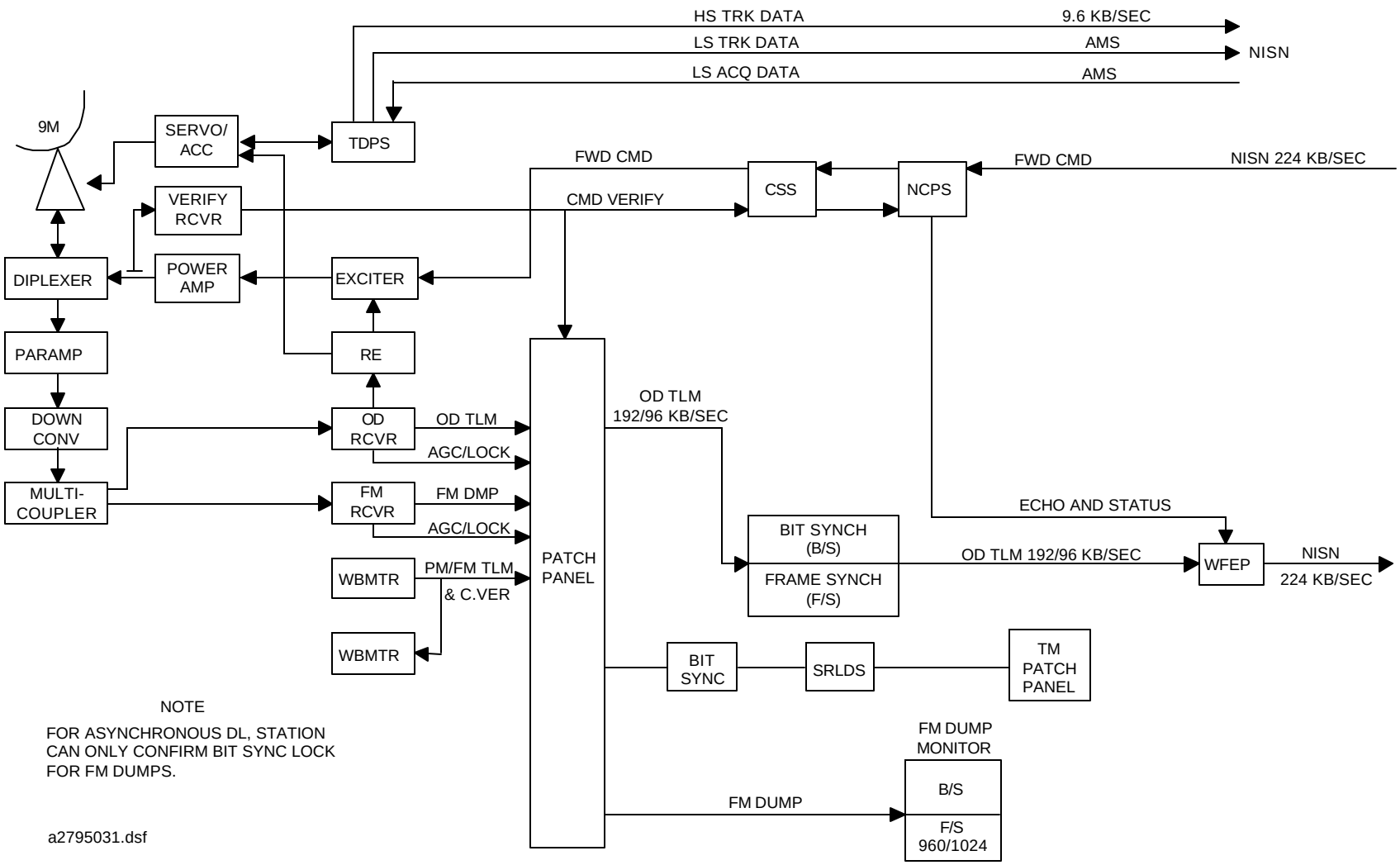

Figure 1-19. WPS Orbital Configuration

Section 2. Telemetry

2.1 General

This section contains the mission-specific TLM information and equipment operating procedures required for support of the Space Shuttle.

2.2 Launch and Landing Support

2.2.1 Station Support Requirements/Configurations

Station requirements/configurations for TLM support during the launch, landing approach, landing, and postlanding phases are as follows:

a. Launch. Refer to Table 2-1 for launch support requirements.

b. Landing and Postlanding. Refer to Table 2-2 for landing and postlanding support requirements.

2.2.2 Link Description

2.2.2.1 DL Characteristics

a. OD DL (2217.5/2287.5 MHz PM Ops)

1. Bit rates:

   (a) High Bit Rate (HBR): 192 kb/sec (128-kb/sec TLM; 64-kb/sec voice).

   (b) Low Bit Rate (LBR): 96 kb/sec (64-kb/sec TLM; 32-kb/sec voice).

2. Code type: BiØ-L.

3. Word/major frame:

   (a) HBR: 16,000 (128 kb-sec OD PCM data); 24,000 (192-kb/sec OD DL).

   (b) LBR: 8000 (64-kb/sec OD PCM data); 12,000 (96 kb/sec OD DL).

4. Minor frames/major frame: 100.

5. Words/minor frame:

   (a) HBR: 160 (128-kb/sec OD PCM data); 240 (192-kb/sec OD DL).

   (b) LBR: 80 (64-kb/sec OD PCM data); 120 (96-kb/sec OD DL).

6. Bits/word: 8.

7. Frame sync pattern: 76571440_8.

Table 2-1. Launch Support Requirements

Link	Data	Receive	Decommutate	Record	Display	Remote To:			
						GSFC/JSC	CCC via MIL	KSC	MSFC
OD DL (2217.5/ 2287.5 MHz PM Ops)	Composite: 96-/192-kb/sec voice and TLM	MIL, PDL, and WPS (Note 2)	MIL and MIL/PDL 1. Demultiplex to separate voice and TLM (for on-site monitoring only) 2. Monitor 96-/ 192-kb/sec to WFEP (WPS only) 3. Throughput 96-/192-kb/sec to WFEP (WPS only) 4. Strip-out Range Safety parameters 5. Station play-back.	MIL, PDL, WPS, and JDI	MIL/PDL 1. Composite lock 2. S/C NSP FS lock 3. S/C rcvr phase lock	MIL and WPS 1. TLM: Real time and station playback 2. SSM (not WPS)	WPS and PDL (Note 1)	MIL (via wideband transmission interface system at MIL) bit sync output	MIL/PDL and WPS TLM: Real-time JSC OD and station playback.
FM DL (2250.0) MHz FM Ops)	EIU/SSME data (real-time or dump)	MIL, WPS, and PDL		MIL, WPS, and PDL				MIL (via wideband transmission interface system) MFR output	MIL/PDL, WPS TLM: Real-time and station playback via MDM

NOTE

1. OD DL: MIL, PDL, or WPS Range Safety parameters are remoted to ER/ROCC via MIL at 2.4 kb/sec.
2. The 192-kb/sec OD DL is remoted from MIL, PDL, or JDI to TEL-4 from processing at TEL-4 remoting to ER/ROCC.

Table 2-2. Landing and Postlanding Requirements (1 of 2)

Link	Data	Receive	Decommutate	Record	Display	Remote To:		
						GSFC	MIL	KSC
OD DL (2217.5/2287.5 MHz PM Ops)	Composite 96-/192-kb/sec voice and TLM	DFRC (EAFB landing) data via PTP	DFRC (EAFB landing) data via PTP	DFRC (EAFB landing)	a. Composite lock b. S/C NSP FS lock	DFRC (EAFB landing)	DFRC (EAFB landing) Post landing support (Note)	1. MIL (EAFB land-ing) via wideband transmission interface system at MIL TLM from DFRC)
		MIL and PDL (KSC landing)	MIL and PDL (KSC landing): a. Demultiplex to separate voice and TLM (96-/192-kb/sec) (for on-site monitor only) b. Monitor 96-/192-kb/sec frame sync patterns for SSM c. 96/192-kb/sec to TCDS d. Station playback	MIL and PDL (KSC landing)	MIL and PDL (KSC landing): a. Composite lock b. S/C NSP FS lock c. S/C rcvr phase lock	MIL (KSC landing): a. TLM, real-time and station playback b. SSM		2. MIL (KSC landing) (via wideband transmission interface system at MIL) bit sync output

Table 2-2. Landing and Postlanding Requirements (2 of 2)

Link	Data	Receive	Decommutate	Record	Display	Remote To:		
						GSFC	MIL	KSC
FM (2250.0 MHz FM Ops)	1. Dump: a. OD 128-kb/sec TLM (1) 1:1 at 128 kb/sec (2) 8:1 at 1024 kb/sec b. TDM 192-kb/sec voice and TLM (1) 1:1 at 192 kb/sec (2) 5:1 at 960 kb/sec	MIL (KSC landing)	MIL (KSC landing): a. Monitor frame sync pattern for SSM b. Station playback	MIL (KSC landing)		MIL (KSC landing): a. SSM b. Station playback (only): (1) Analog voice (2) TLM		MIL (KSC landing) (via wideband transmission interface system at MIL) MFR output
		DFRC (EAFB landing)	DFRC (EAFB landing): Dump playback via PTP	DFRC (EAFB landing): Dub Ops 1 and Ops 2 recording if requested		DFRC (EAFB landing) Dump playback-TLM		
	2. TV	MIL (KSC landing)	MIL (KSC landing) process	MIL (KSC landing)	MIL (KSC landing) Direct to JSC			
NOTE Postlanding support may be up to 105 hours.								

8. Data transmission: MSB first.

9. TLM data format:

   (a) Refer to JSC 08118.

   (b) TDM serial data:

      (1) 192-kb/sec bit rate: The 128-kb/sec OD TLM data is multiplexed with two 32-kb/sec Delta-modulated voice channels to form a 192-kb/sec TDM serial data train. The TDM composite signal phase modulates on the 2287.5-/2217.5-MHz carrier.

      (2) 96-kb/sec bit rate: The OD TLM bit rate is reduced to 64 kb/sec and only one 32-kb/sec voice channel is transmitted, which results in a 96-kb/sec TDM serial data train.

10. LBR/HBR DL: Under control of the crew or ground, the Orbiter NSP performs the switching between LBR and HBR modes. When the NSP switches the DL rate from 96 kb/sec to 192 kb/sec or from 192 kb/sec to 96 kb/sec, the switch may be made at any point in the data cycle.

11. LBR/HBR 288/576-kb/sec convolutional encoding: Space Shuttle uses X3 convolutional encoding which changes the basic bit rates to 288 kb/sec and 576 kb/sec. Convolutional encoding allows three bits to represent one bit in the encoded mode. This can be equated with effectively increasing transmitter power, an increase in receive antenna area which results in a lower overall system Bit Error Rate (BER), and enhances the ability to operate at lower Signal-to-Noise (S/N) Ratios.

b. FM DL (2250.0 MHz FM Ops)

   1. Real time:

      (a) Engine Interface Unit (EIU/SSME):

         (1) Bit rate: 60 kb/sec.

         (2) Code type: BiØ-L.

         (3) Words/major frame: 132.

         (4) Bits/word: 16.

         (5) Major frame sync pattern: 76571440_8.

         (6) Data transmission: MSB first.

         (7) TLM data format:

            <u>a.</u> Refer to JSC 08118.

b. Three real-time 60-kb/sec ME data channels are time-shared with other channels and transmitted in the 2250.0-MHz FM link. The three channels phase shift key three subcarriers at 576, 768, and 1024 kHz, respectively, which are then frequency division multiplexed into a single analog ME data signal prior to frequency modulating the carrier (refer to Table 2-3).

NOTE

Real-time DL of EIU/SSME data occurs only during the launch phase.

(b) Attached payload data: Refer to the appropriate mission annex.

(c) Television: Refer to Section 25.

2. Dump:

(a) Operational recorders:

(1) EIU/SSME: Refer to paragraph 2.2.2.1b(1) for TLM data description and Table 2-4 for dump versus bit rate ratios. Planned sequence of S/C playback of the EIU/SSME data involves playback of two tracks of data in reverse and one track in the forward direction.

NOTE

Dump of EIU/SSME data is at 1:1 ratio (one channel at a time) or 16:1 ratio (one channel at a time).

(2) OD data (128 kb/sec):

a. Bit rate: 128-kb/sec OD PCM TLM data is dumped at different speeds at different bit rates and in different directions (refer to Table 2-4).

b. Code type: BiØ-L.

c. Words/major frame: 16,000 (OD PCM data).

d. Minor frames/major frame: 100.

e. Words/minor frame: 160 (OD PCM data).

f. Bits/word: 8.

Table 2-3. FM DL, 2250.0-MHz Real-time DL Characteristics

Channel (Notes 1 and 2)	Bit Rate or Baseband Width	Subcarrier Frequency and Modulation	Carrier Peak Deviation
(D) Main engine 1	60 kb/sec ±0.01%	576 kHz ±0.01%, PSK	635 kHz +15%
(D) Main engine 2	60 kb/sec ±0.01%	768 kHz ±0.01%, PSK	635 kHz ±15%
(D) Main engine 3	60 kb/sec ±0.01%	1024 kHz ±0.01%, PSK	635 kHz ±15%
(A) Television	4.5 MHz	NA	4.5 MHz ±15%
(D) Payload	200 b/sec to 5 Mb/sec ± TBD	NA	2.0 MHz ±15%
(D) Playback - Message Switching System (MSS)	25.5-1024 kb/sec ± TBD	NA	

NOTE

1. D: Digital; BiØ-L signal format.
2. A: Analog
3. Refer to Table 2-4.

Table 2-4. FM DL, 2250.0-MHz Dump Configuration

Bit Rate Recorded on (kb/sec)	Shuttle Ops Recorder Dump Speed (in./sec)	Dump Ratio	DL Bit Rate (kb/sec)
EIU/SSME: 60	7.5	1:1	60
EIU/SSME: 60	120	16:1	960
OD: 128	15	1:1	128
OD: 128	120	8:1	1024
TDM: 192	24	1:1	192
TDM: 192	120	5:1	960
TDM: 96	120	8:1	768

g. Frame sync pattern: 76571440_8 (forward).
01147537_8 (reverse).

h. Data transmission: MSB first (forward). Least Significant Bit (LSB) first (reverse).

i. TLM data format: Refer to JSC 08118.

(3) TDM data (192 kb/sec): The 128-kb/sec OD PCM telemetry data with two 32-kb/sec digital voice channels is played back at different speeds and at different bit rates in the 2250.0-MHz link. (Refer to Table 2-4.)

(b) Payload recorder playback data: Refer to the appropriate mission annex.

2.2.3 Data Systems Configuration

Nominal Control Settings. Refer to Table 2-5 for nominal PCM formats for real time and playback support (refer to the SSIs for the latest authorized versions of the software). WPS will refer to the Wallops Front End Processor (WFEP) User's Guide (521-MEDS-001).

2.2.4 Data Conditioning Subsystem (MIL/PDL)

2.2.4.1 General

The Data Conditioning Subsystem (DCX) is used to receive Bi-Phase Shift Keyed (BPSK) data modulated on a subcarrier, received from the Multifunction Receiver, and demodulate and synchronize the data. It accomplishes this task through the use of BPSK demodulators and bit synchronizers. OD is received from the Multifunction Receiver and is switched directly to the Bit Sync for synchronization of the data. The SSME data must first be demodulated prior to being switched to a bit sync.

2.2.4.2 Bit Synchronizers

Refer to Tables 2-6 and 2-7 for bit synchronizer setup.

2.2.4.3 PSK Demodulators

Refer to Table 2-8 for PSK Demodulator setup.

2.2.4.4 MIL Launch Bit Sync Assignments

a. Bit Sync 1 - 60 kb.

b. Bit Sync 2 - 60 kb.

c. Bit Sync 3 - 60 kb.

d. Bit Sync 4 - Spare.

e. Bit Sync 5 - 192 kb.

f. Bit Sync 6 - 96 kb.

Table 2-5. Nominal Launch and DL Configuration

DL Mode OD FM	DL Bit Rate (kb/sec)	DG FMT	SLSS 1 (kb/sec)	SLSS 2 (kb/sec)	SRLDS Prime (kb/sec)	SRLDS Alternate	DMS 403 FMT	403 FMT	Remarks
02/04	96	171	96	288 (Note)	96	288 (Note 1)	2	04-02	GN LBR
03/05	192	173	192	576 (Note)	192	576 (Note 1)	1	04-01	GN HBR
10	288	171	96 (Note 1)	288	96 (Note 1)	288	2	04-02	TDRS HBR (encoded)
11	576	173	192 (Note 1)	576	192 (Note 1)	576	1	04-01	TDRS HBR (encoded)
Hardline									
Hardline	64	172					NA	04-06	LBR
Hardline	128	174					NA	04-05	HBR
Hardline	96	171					2	04-02	LBR
Hardline	192	173					1	04-01	HBR
SSME Real Time									
22	60	152					403 FMT Manual	403 FMT Manual	Real-time SSME

NOTE

1. In the event of failure, system will be configured for the DL that is present, GN or TDRSS.
2. WPS will support with a bit sync/WFEP and will support with the applicable files.

Table 2-6. OD DL (2217.5/2287.5 MHz) Bit Synchronizer Setup (MIL/PDL)

DL Mode	Bit Rate (kb/sec)	Loop Deviation	Input Data Code	Output Data Code
2	96	0.54%	BiØ-L	NRZ-L
3	192	0.54%	BiØ-L	NRZ-L
4	96	0.54%	BiØ-L	NRZ-L
5	192	0.54%	BiØ-L	NRZ-L

Table 2-7. FM DL (2250.0 MHz) Bit Synchronizer Setup (MIL/PDL)

DL Mode	Bit Rate (kb/sec)	Loop Deviation	Input Data Code	Output Data Code
03	960	0.54%	BiØ-L	NRZ-L
05	1024	0.54%	BiØ-L	NRZ-L
13	960	0.54%	BiØ-L	NRZ-L
15	1024	0.54%	BiØ-L	NRZ-L
22	60	0.54%	BiØ-L	NRZ-L

Table 2-8. MIL PSK Demodulator Setup for Launch

Parameter	DCX-1 Demod 1	DCX-1 Demod 2	DCX-1 Demod 3	DCX-2 Demod 1	DCX-2 Demod 2	DCX-2 Demod 3
Subcarrier Frequency	576 kHz	768 kHz	1024 kHz	576 kHz	768 kHz	1024 kHz
Data Bandwidth	60000 Hz	60000 Hz	60000 Hz	60000 Hz	60000 Hz	60000 Hz
Loop Bandwidth	50 Hz	50 Hz	50 Hz	50 Hz	50 Hz	50 Hz
Source	1	1	1	1	1	1
Impedance	50 ohms	50 ohms	50 ohms	50 ohms	50 ohms	50 ohms

2.2.4.5 MIL/PDL SSME Data Flow

Refer to Figure 2-1 for the MIL/PDL SSME data flow configuration.

2.2.5 Bit Synchronizers, Launch Phase (WPS)

Refer to Table 2-9 for bit synchronizer setup. During dump data monitoring support, the reproduce track is configured to a bit sync/frame sync combination to validate the recording. On the dump monitor synchronizers, the station has the option to override source No. 1 and use source No. 2, 3, etc.

Table 2-9. OD DL (2217.5/2287.5 MHz) Bit Synchronizer Setup

DL Mode	Bit Rate	Loop Band-width (BW) (Note)	Code Type
2	LBR: 9.6×10^4	2	BiØ-L
3	HBR: 1.92×10^5	2	BiØ-L
4	LBR: 9.6×10^4	2	BiØ-L
5	HBR: 1.92×10^5	2	BiØ-L
NOTE 3 for Model 335.			

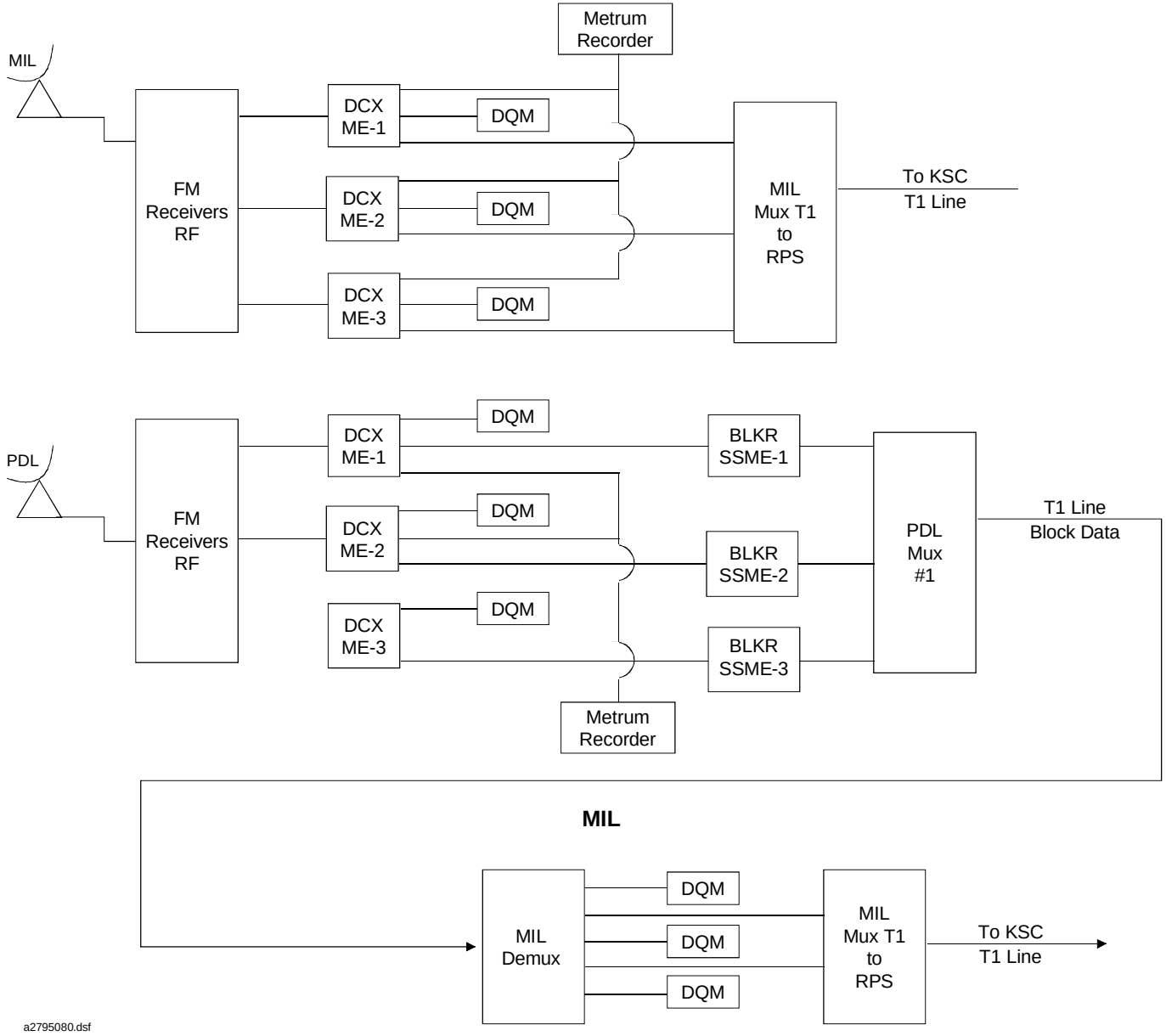

Figure 2-1. MIL/PDL SSME Data Flow

2.2.6 Phase Shift Key Demodulator FM DL

a. Configuration. Configure the PSK to demodulate the three 60-kb/sec ME digital data channel subcarriers from the 2250.0-MHz FM DL as follows:

Unit/Function		Indication/Setting		
		No. 1	No. 2	No. 3
1.	Subcarrier	5.76×10^5	7.68×10^5	1.024×10^6
2.	Bandwidth	1.8×10^5	1.8×10^5	1.8×10^5
3.	Tracking	10%	10%	10%
4.	EXT/INT	INT	INT	INT
5.	Loop BW	1	1	1

b. Bit Sync/Frame Sync SSME Setup. Refer to Table 2-10 for bit sync and frame sync configuration for data quality monitoring.

c. MIL Comm Data Conditioning Subsystem Launch Configuration. Refer to Table 2-11 for the MIL Communications Conditioning Subsystem (CCX) launch configuration.

Table 2-10. WPS FM DL SSME Bit Sync/Frame Sync Setup

Bit Sync			
DL Mode	**Bit Rate**	**Loop BW (Note)**	**Code Type**
22	6.0×10^4	2	BiØ-L
NOTE 3 for Model 335.			
Frame Sync			
Function	Data		
1	372		
2	363		
4	040		
5	377		
6	377		
7	377		
8	000		
9	330		
10	000		
11	010		
12	100		
13	000		
14	320		
15	-		

Table 2-11. MIL CCX Launch Configuration

Unit	Bit Rate	Loop Deviation	Input Code	Output Code	Source	Input Name
CCX_BS-1	128 kb/sec	0.54%	BiØ-L	NRZ-L	1 in	H/L data from KSC
CCX_BS-2	72 kb/sec	0.54%	BiØ-L	NRZ-L	1 in	Serial cmds from KSC
CCX_BS-3	192 kb/sec	0.54%	BiØ-L	NRZ-L	1 in	OD data from JDI
CCX_BS-4						Unassigned
CCX_BS-5						Unassigned
CCX_BS-6						Unassigned

NOTE

The CCX subsystem is a modified DCX. There are six Bit-Sync cards but no DEMOD cards. The CCX is used to convert up to six Bi-Phase-L input signal formats to Nonreturn-to-Zero-Level (NRZ-L) format. Currently these are used: 128-kb/sec hard line, 72-kb/sec KSC command data, and JDI 192-kb/sec OD data.

2.2.7 Data Comm Switch (MIL/PDL only)

2.2.7.1 General

The Data Comm Switch (DCS) is the interface between the DCX and the DQM, Metrum Recorders, and the NISN Blockers/Deblockers (NBD). The DCS has a 422 interface (NRZ-L). The MIL DCS has a 256-channel input/output capability with 16 output channels per card. The PDL DCS has a 64-channel input/output capability with 16 output channels per card.

2.2.7.2 MIL Launch Super Group Setup for DCS

MIL uses the following input and output supergroups to configure the DCS for launch support. A supergroup is a combination of standard groups under one name. A supergroup will contain only input or output group names, but not both types under one name. A standard group is a grouping of individual ports on the switch and will be all output ports or all input ports under that name. A group can consist of any number of ports up to the full compliment of the matrix. (Reference MIL-MSP-001 Mission Support Procedure for detailed setup instructions.)

a.	RCD1_SUPLAU_IN	TO	RCD1_SUPLAU_OUT
b.	RCD2_SUPLAU_IN	TO	RCD2_SUPLAU_OUT
c.	RCD3_SUPLAU_IN	TO	RCD3_SUPLAU_OUT (BACKUP)
d.	SUPL_OD_IN	TO	SUPL_OD_OUT
e.	RS_SUP_IN	TO	RS_SUP_OUT (MIL & PDL, RS1 & RS2)
f.	UTDF_SUP_IN	TO	UTDF_SUP_OUT (Remains in all the time)
g.	TCDS_SUP_IN	TO	TCDS_SUP_OUT (TCDS RS)
h.	JSC_SUP_IN	TO	JSC_SUP_OUT (Super group remains in from Pre Launch thru Post Landing)

2.2.7.3 STS Data Quality Monitor Assignments for Launch

The following is a list of the Data Quality Monitor (DQM) units and channel assignments along with a descriptor field assigned to the unit and channel. The descriptor field is an operator entry on the DQM subsystem controller that allows an entry for each channel monitoring data. The other column lists the equipment that is providing the data to the DQM for quality monitoring.

	Channel	Description	Input Source
a.	DQM1_CH1	MILA ME-1	DCX1 DEMOD 1/DCX1_BS-1
b.	DQM1_CH2	MILA ME-2	DCX1 DEMOD 2/DCX1_BS-2
c.	DQM1_CH3	MILA ME-3	DCX1 DEMOD 3/DCX1_BS-3
d.	DQM1_CH4	128 KB H/L	CCX_BS-1
e.	DQM1_CH5	192 KB MILA PR OD	DCX1_BS-5
f.	DQM1_CH6	96 KB MILA PR OD	DCX1_BS-6
g.	DQM1_CH7	192 KB SLSS	SLSS_LNK1_DIU
h.	DQM1_CH8	192 KB JDI DATA	CCX_BS-3
i.	DQM2_CH1	MILA ME-1	DCX2 DEMOD 1/DCX2_BS-1
j.	DQM2_CH2	MILA ME-2	DCX2 DEMOD 2/DCX2_BS-2
k.	DQM2_CH3	MILA ME-3	DCX2 DEMOD 3/DCX2_BS-3
l.	DQM2_CH4	72 KB SERIAL CMDS	KSC_VERIFY (NCPS/SFL KSC)
m.	DQM2_CH5	192 KB MILA BU OD	DCX2_BS-5
n.	DQM2_CH6	1024/960 KB FWD	CDF/DEMUX
o.	DQM2_CH7	192 KB SLSS	SLSS_LNK2_DIU
p.	DQM2_CH8	128/192 KB JSC OD	CDF-2
q.	DQM3_CH1	198 KB WPS OD	CDF-1
r.	DQM3_CH2	72 KB CMD VERIFY	NCPS1_VERIFY
s.	DQM3_CH3	72 KB KSC CMD	CCX_BS-2
t.	DQM3_CH4	PDL ME-1	DEMUX1_CH1_OUT
u.	DQM3_CH5	PDL ME-2	DEMUX1_CH2_OUT
v.	DQM3_CH6	192 KB PDL OD	MUX1_FROM_PDL
w.	DQM3_CH7	PDL ME-3	DEMUX1_CH3_OUT
x.	DQM3_CH8	1024 KB REV	NBD5_CHB_OUT

2.2.7.4 Data Quality Monitor (MIL/PDL only)

The DQM system is used to provide the operator with the ability to quality monitor the data types during launch. A file containing the parameters to monitor a particular type of data is loaded into each individual channel being used to monitor data. Table 2-12 contains a sample of several parameters that reloaded into the channels. The DQM replaces the 403 frame sync at MIL and the 440 frame sync at PDL.

Table 2-12. DQM Setups for MIL Launch (1 of 2)

Launch DQM A

Channel	Sync Pattern	Bits/Frame	Data
1	FAF3.2000.0000	2112	SSME-1 60 kb/sec
2	FAF3.2000.0000	2112	SSME-2 60 kb/sec
3	FAF3.2000.0000	2112	SSME-3 60 kb/sec
4	FAF3.2000.0000	1280	128 kb/sec H/L
5	FAF3.2000.0000	1920	192 kb/sec MIL PR OD
6	FAF3.2000.0000	960	96 kb/sec OD
7	FAF3.2000.0000	1920	192 kb/sec SLSS LNK 1
8	FAF3.2000.0000	1920	192 kb/sec JDI Data

Launch DQM B

Channel	Sync Pattern	Bits/Frame	Data
1	FAF3.2000.0000	2112	SSME-1 60 kb/sec
2	FAF3.2000.0000	2112	SSME-2 60 kb/sec
3	FAF3.2000.0000	2112	SSME-3 60 kb/sec
4	FAF3.2000.0000	1440	72 kb/sec KSC VERIFY
5	FAF3.2000.0000	1920	192 kb/sec MILS BU OD
6	FAF3.2000.0000	1920/1280	1024/960 kb/sec FWD
7	FAF3.2000.0000	1920	192 kb/sec SLSS LNK 2
8	FAF3.2000.0000	128/1920	128/192 kb/sec JSC OD

Table 2-12. DQM Setups for MIL Launch (2 of 2)

Launch DQM C

Channel	Sync Pattern	Bits/Frame	Data
1	FAF3.2000.0000	1920	192 kb/sec WPS OD
2	FAF3.2000.0000	1440	MIL CMD VER 72 kb/sec
3	FAF3.2000.0000	1440	KSC CMD 72 kb/sec
4	FAF3.2000.0000	2112	PDL ME-1
5	FAF3.2000.0000	2112	PDL ME-2
6	FAF3.2000.0000	1920	PDL OD
7	FAF3.2000.0000	2112	PDL ME-3
8	04CF.5F00.0000	1920/1280	1024/960 kb/sec Reverse

NOTE

When JSC OD is changed to 128 kb/sec, change CDF-2 frequency to 128 kb/sec, and DQM2_CH8 to “STS128KB”. When data rate is changed back to 192 kb/sec, change CDF-2 frequency back to 192 kb/sec and change DQM2_CH8 to “STS192KB”.

2.2.7.5 DQM Setup for PDL Launch

Table 2-13 shows the DQM setup for PDL launch.

Table 2-13. DQM Setup for PDL Launch

DQM “A”

Channel	Sync Pattern	Bits/Frame	Data
1	FAF3.2000.0000	2112	SSME #1
2	FAF3.2000.0000	2112	SSME #2
3	FAF3.2000.0000	2112	SSME #3
4	FAF3.2000.0000	1920	MIL OD 192 kb/sec
5	FAF3.2000.0000	1920	PDL OD 192 kb/sec
6	FAF3.2000.0000	960	PDL OD 96 kb/sec
7	FAF3.2000.0000	1440	PDL CMD VER 72 kb/sec
8	FAF3.2000.0000	1920	SLSS OD 192 kb/sec

NOTE

DQM “B” Configuration same as DQM “A”.

2.2.7.6 Shuttle Status Display Unit (MIL/PDL only)

The Shuttle Status Display Unit (SSDU) receives data from the DQM and displays 4 status bits. These bits indicate: Transponder 1 Lock, Transponder 2 Lock, NSP 1 Lock, and NSP 2 Lock as shown in Tables 2-14 and 2-15.

Table 2-14. Transponder Lock Indicator

	DQM WD #	SSDU WD #	DQM/SSDU FRAME #	DQM/SSDU BIT #
XPDER 1 LOCK	5	4	5	2
XPDER 2 LOCK	4	3	57	3

Table 2-15. Network Signal Processor (NSP) Indicator

	DQM WD #	SSDU WD #	DQM/SSDU FRAME #	DQM/SSDU BIT #
NSP 1 LOCK	4	7	10	10
NSP 2 LOCK	4	3	7	3

2.2.7.7 DFRC OD Downlink Configuration

DFRC will use the information contained in this paragraph for the Space Shuttle OD DL support.

a. PSK Demod (TDRS Mode). For TDRS Mode OD DL support, configure the PSK Demod as follows:

	Unit/Function	Indication/Setting
1.	Subcarrier	5.76×10^5 (HBR) 2.88×10^5 (LBR)
2.	Bandwidth	1.2×10^6
3.	Tracking	10%
4.	EXT/INT	INT
5.	Loop BW	2

b. Viterbi Decoder (TDRS Mode). For TDRS Mode OD DL support, configure the Viterbi Decoder as follows:

Unit/Function	Indication/Setting
ON/OFF	ON

c. Bit Sync. Refer to Table 2-16 for the bit sync configuration for OD DL support.

Table 2-16. DFRC Bit Sync Setup

Bit Rate (kb/sec)	Loop (BW)	Code Type
192	2	BiØ-L
96	2	BiØ-L
128	2	BiØ-L
64	2	BiØ-L

d. Frame Sync. Refer to Table 2-17 for the frame sync configuration for OD DL support.

Table 2-17. DFRC Frame Sync Setup

Function	192 kb/sec	96 kb/sec	128 kb/sec	64 kb/sec
1	372	372	372	372
2	363	363	363	363
3	040	040	040	040
4	000	000	000	000
5	377	377	377	377
6	377	377	377	377
7	377	377	377	377
8	000	000	000	000
9	330	330	330	330
10	100	100	100	100
11	007	003	005	002
12	200	300	000	200
13	000	000	000	000
14	320	320	320	320
15	---	---	---	---

NOTE

1. (E_S) Allowable frame sync bit errors in search mode equals 0.
2. (E_L) Allowable frame sync bit errors in lock mode equals 0.
3. (F_L) Number of consecutive unacceptable patterns allowed in lock mode equals 0.

2.2.7.8 Remote Controller

Refer to Table 2-18 for DMS format. The 330 bit sync and 403 frame sync are programmed by the DMS. Manual programming instructions are contained in Tables 2-19 and 2-20.

Table 2-18. DMS Program Formats

Format No.	Mode	Assignment
1	3 or 5	192-kb/sec DL (V1 and V2): (OD DL HBR)
2	2 or 4	96-kb/sec DL (V1 only): (OD DL LBR)
3	24H or 25H	72-kb/sec UL (V1 and V2): (PM UL HDR)
4	24L or 25L	32-kb/sec UL (V1 only): (PM UL LDR)

Table 2-19. DMS Bit Sync Setup

Bit Rate (kb/sec)	Loop (BW)	GN Code Type
192	2	BiØ-L
96	2	BiØ-L
72	2	BiØ-L
32	2	BiØ-L

2.2.7.9 DL/UL Signal Processing and UL Monitoring

a. 330 Bit Synchronizer No. 1 and No. 2

Unit/Function	Indication/Setting
MANUAL/PROGRAM	PROGRAM

Table 2-20. 403 Frame Sync Setup

Function	Format 1	Format 2	Format 3	Format 4
1	372	372	372	372
2	363	363	363	363
3	040	040	040	040
4	000	000	000	000
5	377	377	377	377
6	377	377	377	377
7	377	377	377	377
8	000	000	000	000
9	330	330	330	330
10	100	100	100	100
11	007	003	005	002
12	200	300	240	200
13	020	020	000	000
14	023 (AFSCN)	023 (AFSCN)	020 (AFSCN)	020 (AFSCN)
	023 (GN)	023 (GN)	320 (GN)	320 (GN)
15	001	002	003	004

NOTE

1. (E_S) Allowable frame sync bit errors in search mode equals 0.
2. (E_L) Allowable frame sync bit errors in lock mode equals 2.
3. (F_L) Number of consecutive unacceptable patterns allowed in lock mode equals 3.
4. Formats 3 and 4 allow zero errors for E_S, E_L, and F_L.
5. Stations have the option to manually change function 14 for formats 1 and 2 to 323 vice 023, which allows selection of the frame dropout counter for display.

b. 403 Frame Synchronizer No. 1 and No. 2

Unit/Function	Indication/Setting
DATA/SETUP/REMOTE	REMOTE

c. Input Selector - Demultiplexer

Unit/Function	Indication/Setting
1. Input (thumbwheel switch)	
(a) CH 1	1
(b) CH 2	2
2. Select	NA
3. REMOTE/LOCAL	REMOTE
4. LSB/MSB	MSB

d. Demodulators No. 1 and No. 2

Unit/Function	Indication/Setting
1. Input, 1, 2	1
2. Filter, INT/EXT	INT
3. Squelch, INH/NON-INH	NON-INH
4. Tone, INH/NON-INH	INH

e. Voice Monitor No. 1

Unit/Function	Indication/Setting
1. Input, 1, 2	1
2. Output, ON/OFF	ON

f. Monitor No. 2

Unit/Function	Indication/Setting
1. Input, 1, 2	1
2. Output, ON/OFF	ON

g. Modulators No. 1 and No. 2

Unit/Function	Indication/Setting
1. Input 600/50	600
2. Clock, INT/EXT	EXT
3. Processor, IN/OUT	IN
4. Key, INH/NON-INH	NON-INH
5. Randomizer, NORMAL	NORMAL
6. Data rate, 24/32	As required

2.2.8 MIL Shuttle Launch Support System (SLSS)

2.2.8.1 General

This section plus *Network Operations Procedures for the Shuttle Launch Support System*, STDN No. 502.35 provides information for TLM configuration of SLSS 1 and 2 at MIL when in the TDRSS mode. See Figure 2-2 for simplified TLM block diagram. Manually set up equipment as follows:

2.2.8.2 Bit Synchronizer (Model 336)

Unit/Function	Indication/Setting
a. Source	1
b. Bit rate	As required
c. Loop (BW)	2
d. Detection ID/FS	ID
e. Polarity NORMAL/INV	NORMAL

2.2.8.3 Demodulator (Model 348A)

Unit/Function	Indication/Setting
a. Mode	Automatic
b. Manual search	5 (adjust for best operation)
c. Vernier	As required

2.2.8.4 Viterbi Decoder

Unit/Function	Indication/Setting
ON/OFF	ON

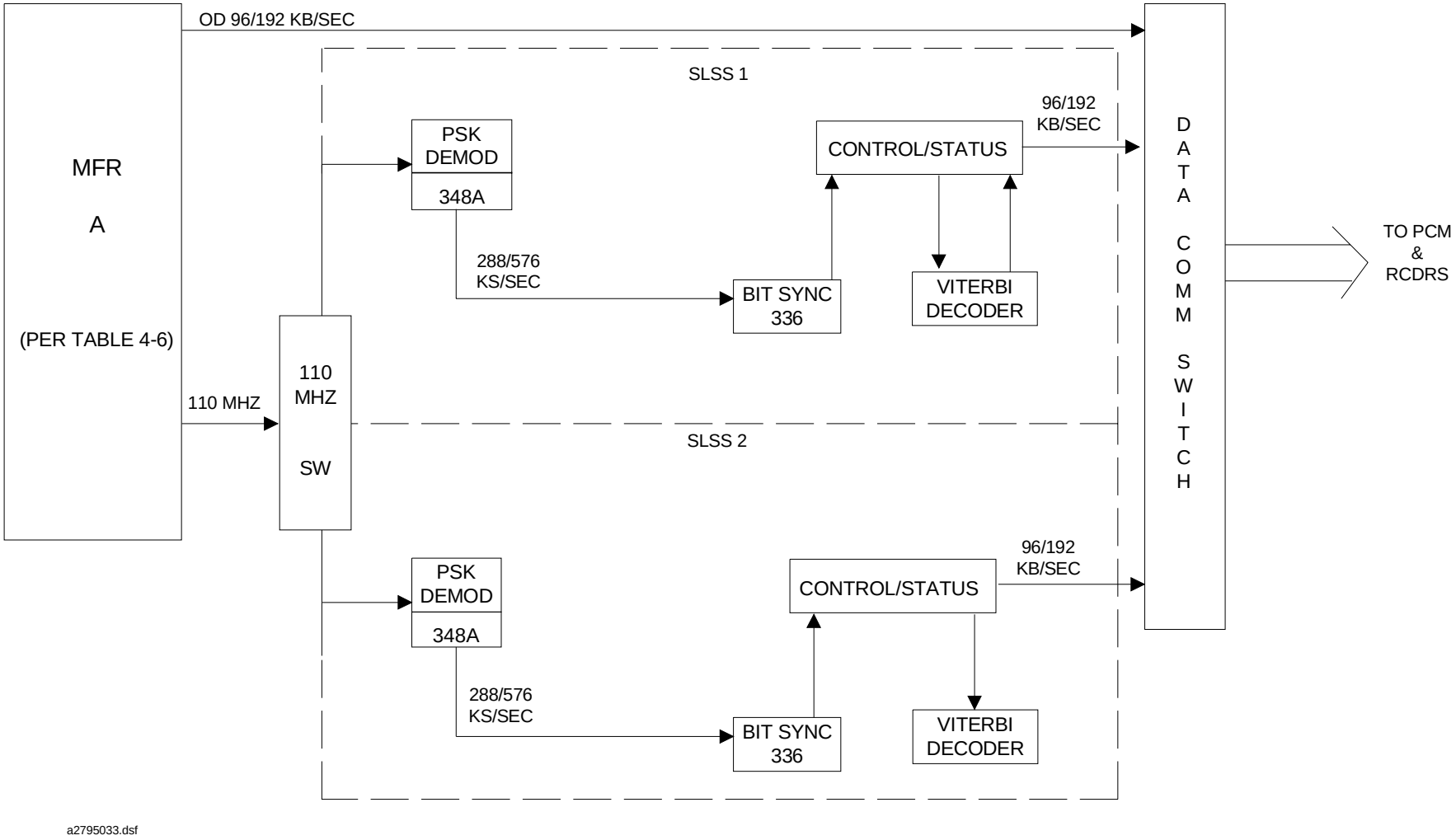

Figure 2-2. MIL SLSS Simplified Telemetry Block Diagram

2.2.8.5 403 Frame Sync

Per paragraph 2.2.5.

2.2.8.6 SLSS Return Link Control Panels

Unit/Function	Indication/Setting
a. Mode	Operate
b. Data rate:	
1. 192 kb/sec	As required
2. 96 kb/sec	As required
c. Status:	
1. Operate	ON
2. Internal loop test	OFF
3. Demod lock	Lock
4. Bit sync lock	Lock
5. Decoder lock	Lock
d. Multifunction Receiver (MFR) Automatic Gain Control (AGC)	Nominal return AGC

2.2.9 Shuttle Return Link Data System (SRLDS)

2.2.9.1 General

During prelaunch/launch phase, PDL/WPS will use a bit sync/Frequency Data Multiplexer (FDM) to support the GN OD DL (96 or 192 kb/sec). PDL/WPS will use the SRLDS/FDM to support the TDRS OD DL (288 or 576 ks/sec).

2.2.9.2 Prime System

a. Bit Synchronizer (Model 336)

Unit/Function	Indication/Setting
1. Source	1
2. Bit rate	As required
3. Loop (BW)	2
4. Detection ID/FS	ID
5. Polarity NORMAL/INV	NORMAL

b. Demodulator (Model 348A)

Unit/Function	Indication/Setting
1. Mode	Automatic
2. Manual search	As required
3. Vernier	As required

c. Viterbi Decoder

Unit/Function	Indication/Setting
ON/OFF	ON

NOTE

Output data will be configured for BiØ-L.

d. Control Status Panel

Unit/Function	Indication/Setting
1. PM/PSK	(PSK-PDL)
2. Viterbi/bypass	(Viterbi-PDL)
3. AUTO-ENABLE/INHIBIT	INHIBIT
4. Manual override	As required
5. PRIME/ALTERNATE	As required
6. OPERATE/TEST	OPERATE

2.2.9.3 Alternate System

a. Bit Synchronizer (Model 336)

Unit/Function	Indication/Setting
1. Source	1
2. Bit rate	As required
3. Loop (BW)	2
4. Detection ID/FS	ID
5. Polarity NORMAL/INV	NORMAL

b. Demodulator (Model 348A)

Unit/Function	Indication/Setting
1. Mode	Automatic
2. Manual search	As required
3. Vernier	As required

c. Viterbi Decoder

Unit/Function	Indication/Setting
ON/OFF	ON

NOTE

Output data will be configured for BiØ-L.

d. Control Status Panel

Unit/Function	Indication/Setting
1. PM/PSK	PSK
2. Viterbi/bypass	Viterbi
3. AUTO-ENABLE/INHIBIT	INHIBIT
4. Manual override	As required
5. PRIME/ALTERNATE	As required
6. OPERATE/TEST	OPERATE

2.2.9.4 403 Frame Sync (or equivalent)

Per paragraph 2.2.5.

2.2.10 Recorder Configuration

2.2.10.1 Magnetic Tape Recorder (WPS, DFRC)

a. General

1. Recorder Type/Track or Channel Assignments. WPS will use ½-inch, 7 track Wideband Magnetic Tape Recorders (WBMTR) configured in accordance with the track assignments shown in Table 2-27. DFRC will use 1-inch 14 track WBMTR configured in accordance with Table 2-31.

2. Dump Data Recordings. During dump data monitoring support, the reproduce track is configured to a bit sync/decom or frame sync combination. This data path configuration is necessary so that JSC/MCC can be provided with real-time information on the status of the data tape. JSC/MCC can then make a decision on whether to rewind the onboard recorder and record new data or dump the same data again. Station has the option of reconditioning the dump data before recording on track 3 or track 5, or recording receiver raw video data on those tracks. Annotate tracks accordingly.

2.2.10.2 Digital Recorder Subsystem (MIL/PDL)

a. General

1. The Digital Recorder Subsystem (DRS) is designed to record and play back digital, analog and event data. The DRS is composed of a Subsystem Controller (SSC), Metrum RS-48 Jukebox, the Calculex CTS-2100 Asynchronous Real-time Multiplexer and Output Reconstructor (ARMOR), and the Metrum Buffered Very Large Store (BVLDS) tape drive.

2. The normal mode of operations for the DRS involves the Remote Control Interface (RCI) operator sending commands to the SSC, which in turn issues appropriate control signals to the Jukebox, ARMOR controller and tape drives. The operator has both the capabilities to configure the DRS for automated recording and for playback of data. The input and output channels will be configured through the use of ARMOR setup files. These files specify the data rates and channel information for the ARMOR.

b. MIL and PDL will use Metrum digital recorders with Very High Speed (VHS) cassette tapes configured in accordance with the channel assignments shown in Tables 2-21 through 2-26 (landing) and Tables 2-28 through 2-30 (postlanding).

c. The Metrum is a Jukebox which holds 48 tapes. MIL has 3 recorders, two in Jukebox #1 and one in Jukebox #2. PDL has two recorders contained in one jukebox.

NOTE

The Metrum does not have the ability to look for tape time but instead looks for the Principle Block Number (PBN), which is on the tape.

Table 2-21. PDL Launch Recorder Setup

Channel	Description	Recorded Rate
1	96 kb/sec OD	97 kb/sec
2	192 kb/sec OD	194 kb/sec
3	192 kb/sec OD	194 kb/sec
4	96 kb/sec OD	97 kb/sec
5		
6	192 kb/sec OD SRLDS	194 kb/sec
7	SSME-1 576 kHz	60.6 kb/sec
8	SSME-2 768 kHz	60.6 kb/sec
9	SSME-3 1024 kHz	60.6 kb/sec
10	224 kb/sec Block CMDS	Not Enabled
11	216 kb/sec CMDS	218.2 kb/sec
12	72 kb/sec CMDS	72.8 kb/sec

Table 2-22. PDL Analog Channel Setup for Launch

Channel	Description
1	RCVR 1 AGC
2	RCVR 2 AGC
3	RCVR 1 X ERR
4	RCVR 1 Y ERR
5	RCVR 3 AGC
6	RCVR 4 AGC
7	
8	NASA 36 Bit Time

Table 2-23. PDL Events Parallel Input

Channel	Bits
01	1-8
02	9-16
03	17-24
04	25-32

Table 2-24. MIL Prelaunch Recorder Configuration

Channel	Description	Recorded Rate (Note)
PCM 20 IN 01	96 kb/sec OD	97 kb/sec
PCM 20 IN 02	128 kb/sec H/L	129.3 kb/sec
PCM 20 IN 03	192 kb/sec OD	PCM 20 OUT 01 194 kb/sec
PCM 20 IN 04	192 kb/sec PDL OD	19 kb/sec
PCM 20 IN 05	192 kb/sec JDI OD	194 kb/sec
PCM 20 IN 06	SLSS_LNK1_DIU	194 kb/sec
PCM 20 IN 07	SSME 1 (576) 60 kb/sec	PCM 20 OUT 02 60.6 kb/sec
PCM 20 IN 08	SSME 2 (768) 60 kb/sec	PCM 20 OUT 03 60.6 kb/sec
PCM 20 IN 09	SSME 3 (1024) 60 kb/sec	PCM 20 OUT 04 60.6 kb/sec
PCM 20 IN 10	MIL CMD Verification 32 kb/sec	32.4 kb/sec
PCM 20 IN 11	MIL CMD Verification 72 kb/sec	72.8 kb/sec
PCM 20 IN 12	KSC CMD 72 kb/sec	72.8 kb/sec
PCM 20 IN 13	MIL CMD Verification 216 kb/sec	218.2 kb/sec
PCM 20 IN 14	MIL CMD Verification 96 kb/sec	97 kb/sec
PCM 20 IN 15	224 CMD Line Blocked	226.5 kb/sec
PCM 20 IN 16	192 kb/sec WPS OD	194 kb/sec
PCM 20 IN 17	192 kb/sec OD JSC OD	194 kb/sec
PCM 20 IN 18	192 kb/sec Backup (B/U) OD bit sync	194 kb/sec
PCM 20 IN 19		
PCM 20 IN 20		
PCM 20 IN 21		
PCM 20 IN 22		
PCM 20 IN 23		
PCM 20 IN 24		

NOTE

1% overhead per channel.

Table 2-25. MIL Launch Analog Channel Setup for Recorders

Channel	Description	Rate
Analog CH 1	RCVR 1 AGC	
Analog CH 2	RCVR 2 AGC	
Analog CH 3	RCVR 1 X ERR	OUT HF Analog 01
Analog CH 4	RCVR 1 Y ERR	OUT HF Analog 02
Analog CH 5	RCVR 3 AGC	
Analog CH 6	RCVR 4 AGC	
Analog CH 7	RCVR 3 X ERR	OUT HF Analog 03
Analog CH 8	RCVR 3 Y ERR	OUT HF Analog 04
Analog CH 9	RCVR 5 AGC	
Analog CH 10	RCVR 6 AGC	OUT HF Analog 05
Analog CH 11	RCVR 5 X ERR	OUT HF Analog 06
Analog CH 12	RCVR 5 Y ERR	
Analog CH 13	RCVR 7 AGC	
Analog CH 14	RCVR 8 AGC	
Analog CH 15	RCVR 7 X ERR	
Analog CH 16	RCVR 7 Y ERR	
Analog CH 17		
Analog CH 18		
Analog CH 19	RCVR 4 X ERR	
Analog CH 20	RCVR 4 Y ERR	
Analog CH 21	RCVR 8 X ERR	
Analog CH 22	RCVR 8 Y ERR	
Analog CH 23	NASA 36 Bit Time	OUT HF Analog 08
Analog CH 24	Interrange Instrumentation Group (IRIG) B Timing	OUT HF Analog 07

Table 2-26. MIL Events Parallel Input

Channel	Bits
01	1-8
02	9-16
03	17-24
04	25-32

Table 2-27. Launch Phase Support MTR Track Assignments for WPS

TRK	Type: WBMTR Speed: 120 in./sec DSS No.: 530 (WPS)	MODE
1	Blank	Dir
2	200-kHz IRIG constant amp ref	Dir
3	Blank	Dir
4	2250.0-MHz rcvr video	Dir
5	Blank	Dir
6	NASA 36-bit BCD time code/ 1 kHz	FM
7	2287.5- or 2217.5-MHz rcvr video	Dir

TRK	Type: WBMTR Speed: 60 in./sec DSS No.: 542 (WPS)	MODE
1	ME 1 data; 576-kHz PSK DEM video 60-kb/sec Bi∅-L	Dir
2	100-kHz IRIG constant amp ref	Dir
3	ME 2 data; 768-kHz PSK DEM video 60-kb/sec Bi∅-L	Dir
4	2250.0-MHz rcvr video	Dir
5	ME 3 data; 1024-kHz PSK DEM video 60-kb/sec Bi∅-L	Dir
6	NASA 36-bit BCD time code/ 1 kHz	FM
7	2287.5- or 2217.5-MHz rcvr video	Dir

Table 2-28. MIL Postlanding Recorder Setup

Channel	Description	Recorded Rate (note)
01	96 kb/sec OD	97 kb/sec
02	128 kb/sec H/L	129.3 kb/sec
03	192 kb/sec OD	194 kb/sec
04	192 kb/sec OD C&T data	194 kb/sec
05	192 kb/sec OD B/U	194 kb/sec
06		
07		
08	192 kb/sec OD Best Source Select (BSS) data	194 kb/sec
09		
10	32 kb/sec CMD Verify	32.4 kb/sec
11	72 kb/sec CMD Verify	72.8 kb/sec
12	72 kb/sec KSC CMDS	72.8 kb/sec
13		
14		
15		
16		
17		
18		
19		
20		
21		
22		
23		
24		

NOTE

1% Overhead per channel.

Table 2-29. MIL Postlanding Analog Channel Setup

Channel	Description	Remarks
Analog CH 1	RCVR 1 AGC	
Analog CH 2	RCVR 2 AGC	
Analog CH 3	RCVR 1 X ERR	
Analog CH 4	RCVR 1 Y ERR	
Analog CH 5	RCVR 3 AGC	
Analog CH 6	RCVR 4 AGC	
Analog CH 7	RCVR 3 X ERR	
Analog CH 8	RCVR 3 Y ERR	
Analog CH 9	RCVR 5 AGC	
Analog CH 10	RCVR 6 AGC	
Analog CH 11	RCVR 5 X ERR	
Analog CH 12	RCVR 5 Y ERR	
Analog CH 13	RCVR 7 AGC	
Analog CH 14	RCVR 8 AGC	
Analog CH 15	RCVR 7 X ERR	
Analog CH 16	RCVR 7 Y ERR	
Analog CH 17		
Analog CH 18		
Analog CH 19	RCVR 4 X ERR	
Analog CH 20	RCVR 4 Y ERR	
Analog CH 21	RCVR 8 X ERR	
Analog CH 22	RCVR 8 Y ERR	
Analog CH 23	NASA 36 Bit Time	OUT HF Analog 08
Analog CH 24	IRIG B Timing	OUT HF Analog 07

Table 2-30. Events Parallel Input for Postlanding

Channel	Bits
01	1-8
02	9-16
03	17-24
04	25-32

Table 2-31. Landing and Postlanding Phase Support MTR Track Assignment for DFRC (Note)

TRK	Type: WBMTR Speed: 30 in./sec DSS No.: 536A	MODE
1	Blank	Dir
2	50-kHz ref	Dir
3	2287.5- or 2217.5-MHz rcvr video (192 kb/sec) (Raw) prime system	Dir
4	Blank	Dir
5	Blank	Dir
6	IRIG B time code	Dir
7	Blank	Dir
8	Blank	Dir
9	2287.5- or 2217.5-MHz rcvr video (192 kb/sec) backup system (raw)	Dir

TRK	Type: WBMTR Speed: 30 in./sec DSS No.: 536B	MODE
1	Blank	Dir
2	Blank	Dir
3	Redundant to DSS-536A	Dir
4	NOTE These WBMTRs are 14-track, 1-inch recorders, however, only tracks 1 through 7 are patched.	Dir
5		
6		
7	Blank	Dir
8	Blank	Dir
9	Redundant to DSS-536A	Dir

TRK	Type: WBMTR Speed: 120 in./sec DSS No.: 537A	MODE
1	Blank	Dir
2	200-kHz IRIG constant amp ref	Dir
3	Blank	Dir
4	2250.0 kHz rcvr video (Raw)	Dir
5	Blank	Dir
6	IRIG B time code	Dir
7	2287.5- or 2217.5-MHz rcvr video (Raw)	Dir
8	Blank	Dir
9	2250.0-MHz rcvr video FM dump (Raw) backup system	Dir
10	Blank	Dir
11	2287.5- or 2217.5-MHz rcvr video (192 kb/sec) (Raw) backup system	Dir

TRK	Type: WBMTR Speed: 120 in./sec DSS No.: 537B (PDL)	MODE
1	Blank	Dir
2	Blank	Dir
3	Redundant to DSS-537A	Dir
4	Blank	Dir
5	Blank	Dir
6	Blank	Dir
7	Blank	Dir
8	Blank	Dir
9	Redundant to DSS-537A	Dir
10	Blank	Dir
11	Redundant to DSS-537A	Dir

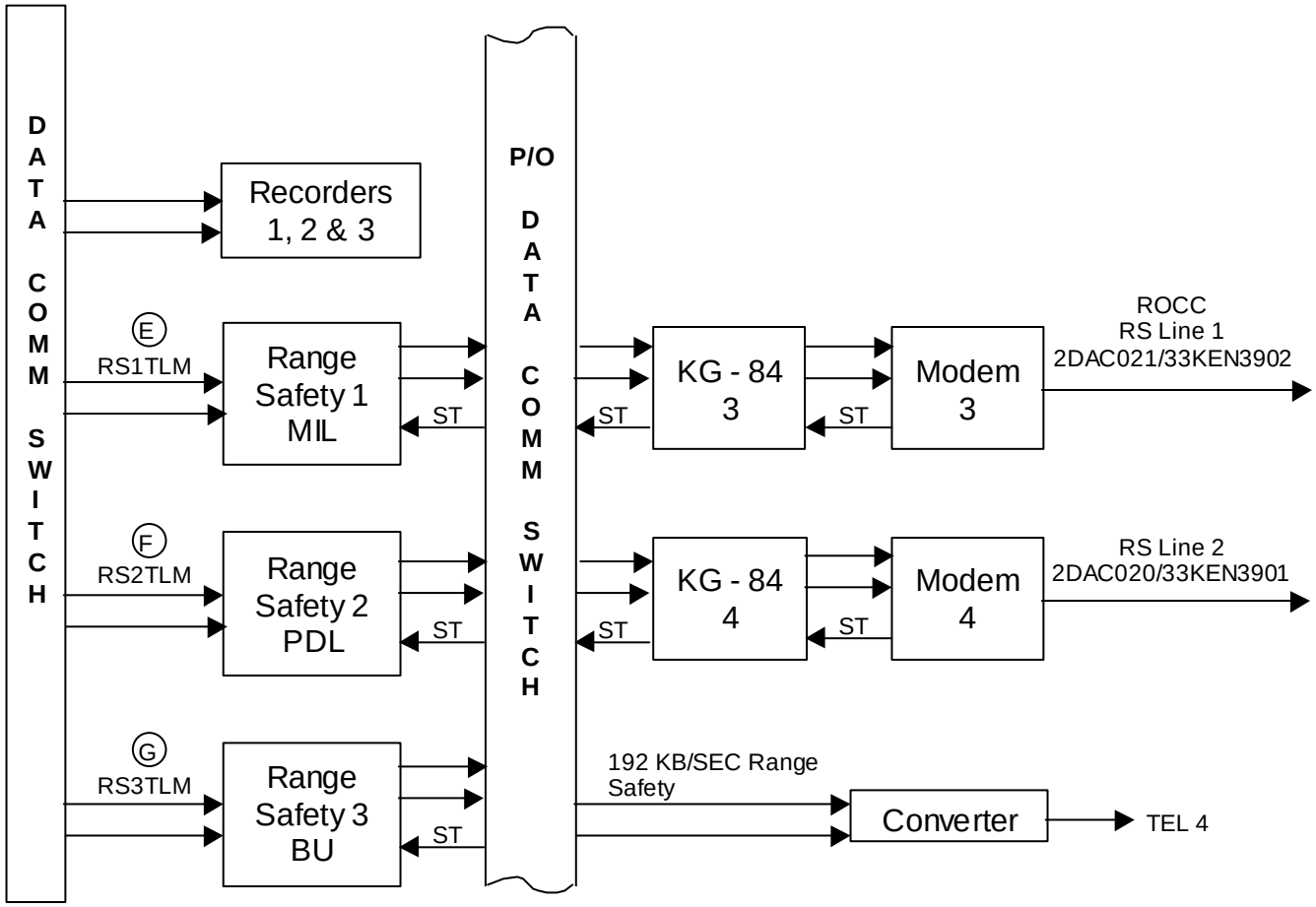

Figure 2-3. MIL Range Safety Configuration

2.2.11 SSME Dump Data Monitoring

a. Purpose. Define configuration and procedures for recording of the SSME dump data, dump data quality monitoring in real time, and the voice/Administrative Message System (AMS) reporting of the dump quality.

b. Participants. Refer to Table 1-4 for callsigns and location.

1. MIL.
2. DFE.
3. MSFC Data.
4. STGT/WSGT Ops.
5. Com Mgr.

c. Procedures

1. During launch phase, the SSME data will be recorded on three tracks of the Orbiter recorder. When dumped to GN stations, the FM mode is 07 or 17. Quality of the dumped data on the ground station recorder tape must be known prior to overwriting the Orbiter recorder. MIL is unable to provide quality of the recorded dump data directly from the target recorder tape due to recorder reproduce constraints.

2. GN stations will perform real-time dump monitoring using the DQM system. One DQM will be programmed for a forward dump (F), and one for a reverse dump (R). In addition, each frame sync will accumulate the number of dropouts for the entire dump. The dump sequence consists of three reverse, two forward, and one reverse.

NOTE

In the event only one frame sync is available for monitoring, program the frame sync for the reverse format and use this (data) for data quality monitoring reporting.

3. Postdump, a verbal report to the DFE is required giving the length of time for the three segments, and the total number of dropouts.

4. The bit sync and frame sync validation settings should be equivalent to that used for the Orbiter OD dump monitor function.

5. MSFC Data requests the NOM to coordinate the playback of the SSME dump data (60 kb/sec) in the forward direction at 120 kb/sec in near real time using the GSFC-to-MSFC 224-kb/sec data line. Refer to paragraph 2.4 for postpass playback configuration.

2.2.12 MIL Best Source Select

a. The Best Source Select (BSS) feature (which is part of the DQM subsystem) provides the capability to programmatically monitor a specified number (7 max) of telemetry data streams and select the stream with the highest quality, subject to certain hysteresis parameters. The DQM SSC communicates with the BSS switch to send the BSS data to the blockers that provide telemetry data to the communication lines to JSC (denoted as the MIL line and the PDL line). Refer to Table 2-32.

b. During a given sample period, the valid frame counter associated with each candidate stream is captured. The counts for all streams that are in-lock are then compared. The stream with the highest valid frame count is specified for the best source. Prior to the actual selection of this stream, the program must first be in the automatic selection mode and the present Best Source Selected stream must have experienced an error in the frame sync during the given sample period. A frame sync error can manifest as unacceptable frame sync patterns while in lock, a frame sync with bit slip detected, or a frame sync drop lock and reacquisition process. In addition, the specified source must pass the hysteresis checks. The hysteresis first checks that the new choice is at least 3 frame counts (referred to as dead band setting) better than the previous choice and secondly that the previous choice must have been selected for at least 2 seconds (referred to as debounce setting). Upon satisfactorily completing the hysteresis checks, a command is issued to actually change the input source.

c. If an operator has selected the manual mode of operation the BSS feature continues to function as described; however, no recommended source is displayed. Actual selection in this mode is based on the operator-specified source.

d. The default BSS settings are deadband = 3 and debounce = 2 (2000 ms). Changes to these settings must be coordinated with Houston GC.

Table 2-32. MIL BSS DQM and Channels

Channel	Data	BSS_IN	OUT JSC	OUT RS
DQM1_CH5	MIL PR	BSS_1_SW_IN	BSS_5_SW_OUT	BSS_1_SW_OUT
DQM2_CH5	MIL BU	BSS_2_SW_IN	BSS_6_SW_OUT	
DQM3_CH6	PDL	BSS_3_SW_IN	BSS_7_SW_OUT	BSS_2_SW_OUT
DQM1_CH8	JDI	BSS_4_SW_IN		
DQM3_CH1	WPS	BSS_5_SW_IN		
DQM1_CH7	SLSS	BSS_6_SW_IN		
DQM2_CH8	JSC OD	BSS_7_SW_IN		

2.2.13 PDL Best Source Select

a. A PDL BSS feature (which is part of the DQM subsystem) provides the capability to programmatically monitor receiver/bit sync combinations (2 maximum) of data streams and select the stream with the highest quality, subject to certain hysteresis parameters. At PDL, the commands are sent from the DQM SSC to the Data Comm Switch to connect a certain bit sync output to the T1 Mux going to MIL. Refer to Table 2-32A.

b. During a given sample period, the valid frame sync counter associated with each candidate stream is captured. The counts for all streams that are in-lock are then compared. The stream with the highest valid frame count is specified for the best source. Prior to the actual selection of this stream, the program must first be in the automatic selection mode and the present Best Source Selected stream must have experienced an error in the frame sync during the given sample period. A frame sync error can manifest as unacceptable frame sync patterns while in lock, a frame sync with bit slip detected, or a frame sync drop lock and reacquisition process. In addition, the specified source must pass the hysteresis checks. The hysteresis first checks that the new choice is at least 3 frame sync counts (referred to as deadband setting) better than the previous choice, and secondly that the previous choice must have been selected for at least 2 seconds (referred to as debounce setting). Upon satisfactorily completing the hysteresis checks, a command is issued to actually change the input source.

c. If an operator has selected the manual mode of operation, the best-source select feature continues to function as described; however, no recommended source is displayed. Actual selection in this mode is based on the operator-specified source.

d. The default BSS settings are deadband = 3 and debounce = 2 (2000 ms). Changes to these settings must be coordinated with Houston GC.

Table 2-32A. PDL BSS DQM and Channels

Channel	Data	Comm Switch_IN	Data Comm Switch_OUT
DQM1_CH5	PDL PR	DCX1_BS-5	MUX1_TO_MILA
DQM2_CH5	PDL BU	DCX1_BS-5	

2.3 Orbital Support

2.3.1 Station Support Requirements/Configuration

Station requirements/configuration for TLM support during the orbital phase are as follows:

a. Orbital. Refer to Table 2-36 for orbital support requirements.

b. Station Configuration. See Figures 1-11 through 1-20 for station configuration.

2.3.2 Link Description

2.3.2.1 Transmitter Characteristics

Refer to Section 4 for transmitter characteristics of OD DL and FM DL (2217.5/2287.5 MHz and 2250.0 MHz, respectively).

2.3.2.2 DL Characteristics

Refer to paragraph 2.2.2.1 for DL characteristics.

2.3.3 Receiver Configuration

2.3.3.1 Multifunction Receiver (MIL/PDL/WPS)

The two data DLs of the Space Shuttle are processed by two MFRs, one for each DL (i.e., OD DL and FM DL) and then routed to the TLM area by programmable patchboard and TLM patch/Data Handling Subsystem (DHSS) I/F. Refer to Section 4 for the MFR configuration.

2.3.3.2 Microdyne Receiver (DFRC)

A DFRC, the Space Shuttle RF is processed through Microdyne 1200-MRC receivers (one set for PM and one set for FM) and then is routed through a patch panel to data recorders and processing equipment.

2.3.4 Data Systems Configuration

2.3.4.1 General

a. Nominal Control Settings. Refer to station local operating procedures. (Refer to the TESOC and the SSIs for the latest versions of the software.)

Table 2-33. MIL Orbit/Landing Recorder Configuration

Channel	Description	Recorded Rate (Note)
01	96 kb/sec OD	97 kb/sec
02	192 kb/sec OD	194 kb/sec
03	192 kb/sec OD	PCM 20 OUT 1 194 kb/sec
04	192 kb/sec OD	194 kb/sec
05	192 kb/sec OD	194 kb/sec
06	192 kb/sec OD SLSS	194 kb/sec
07	768 kb/sec FM Dump	PCM 20 OUT 2 776 kb/sec
08	960 kb/sec FM Dump	PCM 20 OUT 3 970 kb/sec
09	1024 kb/sec FM Dump	PCM 20 OUT 4 1035 kb/sec
10	32 kb/sec CMD Verify	32.4 kb/sec
11	72 kb/sec CMD Verify	72.8 kb/sec
12	1 mb/sec Space Lab	1010 kb/sec
13	72 kb/sec CMD Verify 2	72.8 kb/sec
14		
15		
16		
17		
18		
19		
20		
21		
22		
23		
24		

NOTE

1% overhead per channel.

Table 2-34. MIL Orbit/Landing Analog Channel Configuration for Recorders

Channel	Description	Remarks
Analog CH 1	RCVR 1 AGC	
Analog CH 2	RCVR 2 AGC	
Analog CH 3	RCVR 1 X ERR	OUT HF Analog 01
Analog CH 4	RCVR 1 Y ERR	OUT HF Analog 02
Analog CH 5	RCVR 3 AGC	
Analog CH 6	RCVR 4 AGC	
Analog CH 7	RCVR 3 X ERR	OUT HF Analog 03
Analog CH 8	RCVR 3 Y ERR	OUT HF Analog 04
Analog CH 9	RCVR 5 AGC	
Analog CH 10	RCVR 6 AGC	
Analog CH 11	RCVR 5 X ERR	OUT HF Analog 05
Analog CH 12	RCVR 5 Y ERR	OUT HF Analog 06
Analog CH 13	RCVR 7 AGC	
Analog CH 14	RCVR 8 AGC	
Analog CH 15	RCVR 7 X ERR	
Analog CH 16	RCVR 7 Y ERR	
Analog CH 17		
Analog CH 18		
Analog CH 19	RCVR 4 X ERR	
Analog CH 20	RCVR 4 Y ERR	
Analog CH 21	RCVR 8 X ERR	
Analog CH 22	RCVR 8 Y ERR	
Analog CH 23	NASA 36 Bit Time	OUT HF Analog 08
Analog CH 24	IRIG B Timing	OUT HF Analog 07

Table 2-35. Events Parallel Input Orbit

Channel	Bits
01	1-8
02	9-16
03	17-24
04	25-32

Table 2-36. Orbit Support Requirements (1 of 2)

Link	Data	Receive	Decommutate	Record	Display	Remote (to GSFC) (Note 3)
						Stations
OD DL (2217.5-/ 2287.5- MHz PM Ops)	Composite: 96-/ 192-kb/sec voice and TLM	(Note 1)	1. Synchronous Processing: Stations provide 192-kb/sec data 2. Asynchronous Throughput: Stations provide 192-kb/sec data. 3. Station playback	(Note 1)	(Note 1, except DFRC) 1. Composite lock 2. S/C NSP FS lock 3. S/C rcvr phase lock	(Note 1) 1. Analog voice: real-time and station playback 2. TLM: real-time and station playback 3. SSM

NOTE

1. DFRC, MIL, and WPS.
2. Dump: Transmission of recorded data from Space Shuttle to station.
3. Playback: Transmission of recorded data from station to MCC. Refer to applicable mission annex for payload requirements.

Table 2-36. Orbit Support Requirements (2 of 2)

Link	Data	Receive	Decommutate	Record	Display	Remote (to GSFC) (Note 3) Stations
FM DL (2250.0-MHz FM Ops)	1. Dump (Note 2) a. EIU: 60 kb/sec (1) 1:1 at 60 kb/sec (2) 16:1 at 960 kb/sec b. OD: 128-kb/sec TLM: (1) 1:1 at 128 kb/sec (2) 8:1 at 1024 kb/sec c. TDM: 192-kb/sec voice and TLM: (1) 1:1 at 192 kb/sec (2) 5:1 at 960 kb/sec (except MIL) 2. TV	(Note 1) MIL	(Note 1) 1. Monitor frame sync pattern and SSM (except DFRC) 2. Station playback (Process) MIL	(Note 1) MIL		(Note 1) 1. SSM (except DFRC) 2. Station playback only a. Analog voice b. TLM Direct to JSC from MIL

Note

1. DFRC, MIL, and WPS.
2. Dump: Transmission of recorded data from Space Shuttle to station.
3. Playback: Transmission of recorded data from station to MCC. Refer to applicable mission annex for payload requirements.

b. Synchronous Support. Applicable Data Systems will provide synchronous processing of the DL.

c. Asynchronous Throughput Support. Applicable Data Systems will provide asynchronous processing of the DL. If no frame sync or DMS valid lockup is available, the station will advise the DFE. Refer to Table 2-37 for the nominal DL configuration.

2.3.4.2 Bit Synchronizers

a. Real-time Support. Refer to Table 2-38 for bit synchronizer setups. During dump data monitoring support, the reproduce track is configured to a bit sync/decom or frame sync combination to validate the recording (except MIL). On the dump monitor synchronizers, the station has the option to override source No. 1 and use source No. 2, 3, etc.

b. Playback. When using playback formats the stations have the option of selecting the widest loop BW (4) and then reducing the setting until decom has solid lock.

c. Payload Playback. When using payload playback formats, stations have the option of selecting the widest loop BW and then reducing the setting until the TLM processing equipment has solid lock.

NOTE

If lock cannot be achieved, verify data source, WBMTR, and bit sync for proper operation.

2.3.4.3 403 Frame Sync

For Data Sync Setup Controller (DSSC) or manual setup instructions, refer to STDN No. 515.5 for formats.

2.3.4.4 403 Frame Sync, Dump Monitoring

Stations will perform dump monitoring using two 403 frame syncs. One frame sync will be programmed for forward dump and one for reverse dump. The data source is from the reproduce track of the tape recorder, as applicable (except MIL). Monitor the number of frame sync dropouts accumulated and report the results to the DFE postpass. In the event that only one frame sync is available for SSME dump monitoring, program the frame sync for the reverse format. Stations supporting SSME dumps will also record inlock status on a strip chart recorder. Channel assignments are at station option. Manually set up the bit sync using Table 2-38 and the 403 frame sync using Table 2-39.

Table 2-37. Orbital Throughput Support

DL Mode		DL Bit Rate	DG FMT	DMS 403 FMT	Remarks
OD	**FM**				
02/04		96	144	NA	LBR
03/05		192	143	NA (note)	HBR
Dump Modes					
	3	960 FWD	150		192 (5:1)
	13	960 REV	154		192 (5:1)
	5	1024 FWD	151		128 (8:1)
	15	1024 REV	156		128 (8:1)
	8	768 FWD	141		96 (8:1)
	9	768 REV	157		96 (8:1)
	7	960 FWD	121		SSME 60/16.1
	17	960 REV	124		SSME 60/16.1
	2	192 FWD	143		192 (1:1)
	12	192 REV	153		192 (1:1)
	4	128 FWD	147		128 (1:1)
	14	128 REV	155		

NOTE

1. Except MIL.
2. DFRC will support with bit sync/PTP.

Table 2-38. Bit Synchronizer Setup for Orbit Phase

DL Mode	Bit Rate	Loop BW	Code Type
OD DL (2217.5/2287.5 MHz)			
2	LBR: 9.6×10^4	2 (Note)	BiØ-L
3	HBR: 1.92×10^5	2 (Note)	BiØ-L
4	LBR: 9.6×10^4	2 (Note)	BiØ-L
5	HBR: 1.92×10^5	2 (Note)	BiØ-L
FM DL (2250.0 MHz)			
02	1.92×10^5	2	BiØ-L
03	9.6×10^5	2	BiØ-L
04	1.28×10^5	2	BiØ-L
05	1.024×10^6	2	BiØ-L
06	6.0×10^4	2	BiØ-L
07	9.6×10^5	2	BiØ-L
08	7.68×10^5	2	BiØ-L
09	7.68×10^5	2	BiØ-L
12	1.92×10^5	2	BiØ-L
13	9.6×10^5	2	BiØ-L
14	1.28×10^5	2	BiØ-L
15	1.024×10^6	2	BiØ-L
16	6.0×10^4	2	BiØ-L
17	9.6×10^5	2	BiØ-L
22	6.0×10^4	2	BiØ-L
25 A or B	Refer to applicable annex	2	BiØ-L

NOTE

3 for Model 335.

Table 2-39. 403 Frame Sync Dump Monitor Program

Function	Formats							
	1024 FWD	**1024 REV**	**960 OD FWD**	**960 OD REV**	**768 FWD**	**768 REV**	**960 SSME FWD**	**960 SSME REV**
1	372	004	372	004	372	004	372	004
2	363	317	363	317	363	317	363	317
3	040	137	040	137	040	137	040	137
4	000	000	000	000	000	000	000	000
5	377	377	377	377	377	377	377	377
6	377	377	377	377	377	377	377	377
7	377	377	377	377	377	377	377	377
8	000	000	000	000	000	000	000	000
9	330	330	330	330	330	330	330	330
10	100	100	100	100	100	100	000	000
11	005	005	007	007	003	003	010	010
12	000	000	200	200	300	300	100	100
13	000	000	000	000	000	000	000	000
14	320	320	320	320	320	320	320	320
15	-	-	-	-	-	-	-	-

2.3.4.5 FM Dump Data Monitoring

a. Purpose. Define procedures for dump data quality monitoring for the 403 frame sync and blocker in real time, and the postpass reporting of the dump quality.

b. Participants. Refer to Table 1-4 for callsigns and locations.

   1. OPSR.

   2. DFE.

c. 403 Frame Sync Procedures. Stations will perform real-time dump monitoring using two 403 frame syncs. One frame sync will be programmed for a forward dump, and one will be programmed for a reverse dump. DFRC can only monitor the FM dump in one direction at a time, due to having only one frame sync available for FM dump quality monitoring.

   1. Total Number of Dropouts. Each 403 frame sync will accumulate the number of dropouts for the entire pass.

   2. Segment Times. Stations will configure frame sync lock status to a stripchart recorder for segment times. A segment is defined as a change in the dump format (e.g., when changing from 960R to 1024R creates the second segment). A segment could contain many droplocks (AOSs and LOSs).

2.3.4.6 Ops 2 Recorder Dump Playback Coordination

a. Purpose. Define procedures for the coordination of playbacks of Ops 2 recorder dump data.

b. Participants. Refer to Table 1-4 for callsigns and locations.

   1. OPSR.

   2. DFE.

   3. NOM.

   4. Marshall Data.

   5. KSC/Record and Playback Subsystem (RPS)/Launch Procesing System (LPS).

c. General. KSC/RPS/LPS and MSFC require the Ops 2 recorder data from ascent whenever available from the GN. Procedures are identified for the SN in the 450-602/Space Shuttle NOSP.

d. Procedure. In the event that the Ops 2 recorder is dumped to GN station the following coordination is required:

   1. DFE notifies SMM/GSFC NOM and MSFC data of the playback source, data rate, and destination code (SITE COORD).

2. NOM relays playback information to the OPSR or AFSCN Mission Controller as applicable (SITE COORD) and to MIL and KSC (GSFC/MSFC COORD).
3. NOM confirms with Com Mgr that MIL/MSFC is configured for playback.
   (a) The Com Mgr confirms MIL4 is added to destination code 150, Com Mgr also confirms that the MIL4 output is bridged to a channel on the GSFC/MSFC MDM.
   (b) If from the RTS, 960-kb/sec rate playback, Com Mgr confirms data lines are configured.
4. MIL notifies NOM when MIL and KSC/RPS are ready for playback (SITE COORD).
5. DFE confirms NOM, MSFC Data, and station are ready for playback and initiates playback data.
6. MIL relays to NOM the receipt and data quality at KSC/RPS (GSFC/MSFC COORD).
7. NOM relays data report to DFE (SITE COORD).

2.3.4.7 MIL Orbit Super Group Setup for DCS

Refer to *MILA Space Shuttle Support Procedure*, MIL-MSP-001 for detailed setup instructions.

a. Super Groups:
   1. RCD1_SUPORB_IN TO RCD1_SUPORB_OUT
   2. RCD2_SUPORB_IN TO RCD2_SUPORB_OUT
   3. RCD3_SUPORB_IN TO RCD3_SUPORB_OUT (Backup)
   4. STS_SUPORBT_IN TO STS_SUPORBT_OUT
   5. UTDF_SUP_IN TO UTDF_SUP_OUT (remains in all the time)
b. Force Connect:
   1. SUP_ORBBU_IN TO SUP_ORBBU_OUT (used only when data is put on the MIL & PDL lines)
   2. JSC_SUP_IN TO JSC_SUP_OUT (Super Group remains in from prelaunch thru post landing)

2.3.4.8 MIL FM Dumps Data Flow

Refer to Figure 2-4 for a MIL FM dump data flow configuration.

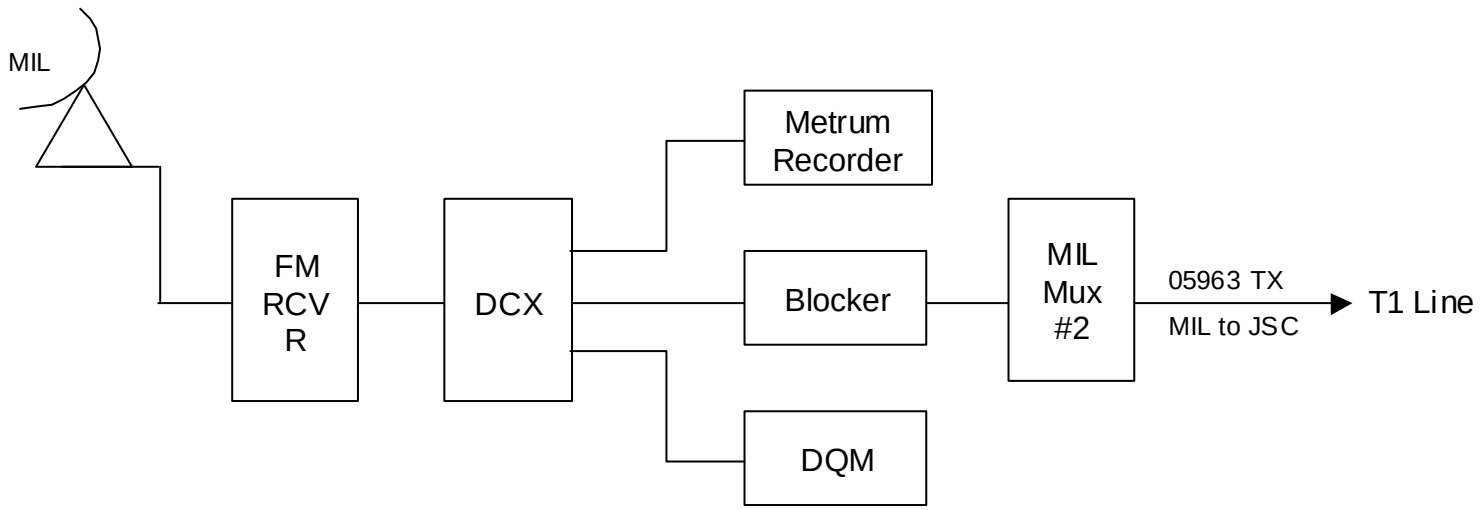

Figure 2-4. MIL FM Dumps Data Flow Configuration

2.3.5 Delta Modulation System

Refer to paragraph 2.2.5 for orbital support configurations. For asynchronous throughput missions only, MIL will use this configuration.

2.3.6 Magnetic Tape Recorder Configuration

2.3.6.1 General

a. Recorder Type/Track or Channel Assignments. Station will use 1/2-inch, 7-track WBMTRs configured in accordance with the track assignments shown in Tables 2-31 and 2-33.

b. Dump Data Recordings. During dump data monitoring support, the reproduce track is configured to a bit sync/TP or frame sync combination. This data path configuration is necessary so that JSC/MCC can be provided with real-time information on the status of the data tape. JSC/MCC can then make a decision on whether to rewind the onboard recorder and record new data or dump the same data again. Station has the option of reconditioning the dump data before recording on track 3 or track 5, or recording receiver raw video on those tracks. Annotate tracks accordingly.

NOTE

During HBR recording, ensure proper impedance matching at all points. Severe data degradation occurs with open-ended or double-terminated line. Observe signal at both record and reproduce for proper amplitude, waveshape, and termination. Refer to STDN No. 502.28, paragraphs 6.1.1a through h.

c. Tape Numbering. Five-digit sequential tape numbering (three-digit Julian date, two-digit sequential number) is required for each data tape. MIL and PDL use Julian date and cassette bar code number. Refer to Section 11 for sequential numbering procedures and DSS No. descriptions.

d. Voice Recorder. Voice recorder track assignments are contained in Table 12-1.

e. Recorder Playback Configurations. Refer to paragraph 2.4 for station recorder playback configurations.

Table 2-40. Orbit Phase Support MTR Track Assignments for WPS

TRK	**Type: WBMTR (Note 1)** **Speed: 120 in./sec** **DSS No.: 532 A and B**	**MODE**
1	CMD verification	Dir
2	200-kHz IRIG constant amp ref	Dir
3	960-kb/sec BiØ-L reconstructed video (Note 1)	Dir
4	2250.0 MHz RCVR Video	Dir
5	1024 kb/sec BiØ-L reconstructed video (Note 2)	Dir
6	NASA 36-bit BCD time code/1 kHz	FM
7	2287.5- or 2217.5-MHz rcvr video/SRLDS	Dir

NOTE

1. Track 3 will contain SSME data when requested. Annotate track accordingly.
2. During mode 25 Payload (PL) support, data will be recorded on track 5 of DSS-532. When track 5 contains PL data, annotate with PL mode and bit rate.

Table 2-41. Orbit Phase Support MTR Track Assignments for DFRC

TRK	Type: WBMTR (FR 3010/3025) Speed: 120 in./sec DSS No.: 537A (DFRC)	MODE
1	Blank	Dir
2	200-kHz IRIG constant amp ref	Dir
3	Blank	Dir
4	2250.0-kHz rcvr video	Dir
5	Blank	Dir
6	IRIG B time	Dir
7	2287.5- or 2217.5-MHz rcvr video	Dir
8	Blank	Dir
9	Blank	Dir
10	Blank	Dir
11	Blank	Dir

TRK	Type: WBMTR (FR 3010/3025) Speed: 120 in./sec DSS No.: 537B (DFRC)	MODE
1	Blank	Dir
2	Blank	Dir
3	Redundant to DSS-537A	Dir
4	Note These WBMTRs are 14-track, 1-inch recorders; however, only tracks 1 through 7 are patched.	
5		
6		
7	Blank	Dir
8	Blank	Dir
9	Blank	Dir
10	Blank	Dir
11	Blank	Dir

2.3.6.2 Orbital Record Requirements

a. MIL. Configure two DSS-533 digital recorders to run simultaneously.

b. DFRC/WPS. Configure two WBMTRs (DSS-537A and B) to run simultaneously at 120 in./sec.

c. Ops-1 and Ops-2 Recorder Dumps.

   1. SSME Data. When SSME ascent data is dumped to the GN, MSFC, JSC, and KSC/RPS (via MIL) requires immediate playback of each individual engine 60 kb/sec data stream at a rate of (120 kb/sec) in the direction received. (Refer to paragraph 2.4.5.)

   2. OD Data. When ascent phase OD data is dumped to the GN, playback to JSC, MSFC, and KSC/RPS (via MIL) is required. Real-time throughput will be provided when the OD ascent data is dumped to WSC or RTS. Tape playback from WSC and RTS may be required if the real-time data transmission is not successful.

2.3.7 High-Speed Data Transmission

2.3.7.1 DFRC

A bit sync supplies serial 192-kb/sec OD data to a PTP blocker via bit sync for real-time transmission to GSFC via a 640-kb/sec IP circuit (GDRC 64061).

2.3.7.2 WPS

WPS will provide data and status via WFEP for real-time transmission to GSFC via a 224-kb/sec NISN circuit.

2.3.7.3 JSC-GSFC

The JSC real-time OD data output transmitted to GSFC will be relayed to MSFC, MIL (for the KSC Launch Control Center [LCC]), and the NCC.

2.4 Station Playback Procedures

2.4.1 General

Stations will configure for playbacks in accordance with Table 2-42, and paragraphs 2.4.2 through 2.4.5.

2.4.2 Playback Requests

Playback requests from JSC (DFE) to the station OPSR will contain the following information:

a. Orbit number.

b. Mode of recorded dump.

c. Full or partial playback required.

d. Orbiter GMT-1 or GMT-2 start/stop times (as applicable).

2.4.3 Station Playback Procedures

2.4.3.1 DFRC Playback

For 768/960/1024 kb/sec; a bit sync will be used to supply serial data to a PTP blocker for transmission to GSFC/JSC.

2.4.3.2 GN

For 768/960/1024 kb/sec; a bit sync or DMS will be used to supply serial data to a TP for transmission to GSFC/JSC.

2.4.4 Station Playback Recorder Configuration

The station recorder will be used for data playbacks. Data will be played in either the forward or reverse position.

NOTE

Station playback support may last until H minus 10 of the station's next prepass activities. Sufficient time would not be available to reconfigure a recorder (i.e., rewind or fast-forward tape, reload recorder) for the upcoming H minus 10 count interface.

2.4.5 GN Stations Space Shuttle Main Engine Dump Data Playback

2.4.5.1 General

SSME data may be dumped at ground element stations. The dump sequence will consist of three segments of equal length. On request from Playback/MSFC Data, station will play back SSME dump data 960 kb/sec (60 kb/sec at 16:1) in the forward direction at 120 kb/sec. Refer to Table 2-42 for playback configuration.

Table 2-42. WBMTR Nonstandard Playback Speed Setup

WBMTR Speed Setting (in./sec)	Actual Speed (in./sec)	External References Frequency (kHz)				Reproduce Mode
		FR-1900	8007	3010	3025	
30	24	320	40	320	320	Dir
15	12	320	20	320	320	Dir

NOTE

Stations will be prepared to configure for a playback within 10 minutes of support LOS, with the tape time-cued within 45 seconds prior to the start of data.

2.4.5.2 ME Identification

When flowing a data segment (1, 2, or 3) to MSFC, give a verbal ID at the start of the segment as follows:

a. Segment 1, channel 1: ME 1 data is on line.

b. Segment 2, channel 2: ME 2 data is on line.

c. Segment 3, channel 3: ME 3 data is on line.

NOTE

Segment 1/Engine No. 1 is dumped last, and therefore appears at the end of tape. Cue tape to playback segment 1, segment 2, segment 3 in that order unless otherwise directed.

2.4.5.3 Postlaunch Playbacks

Refer to Figure 2-5 for postlaunch playback configuration.

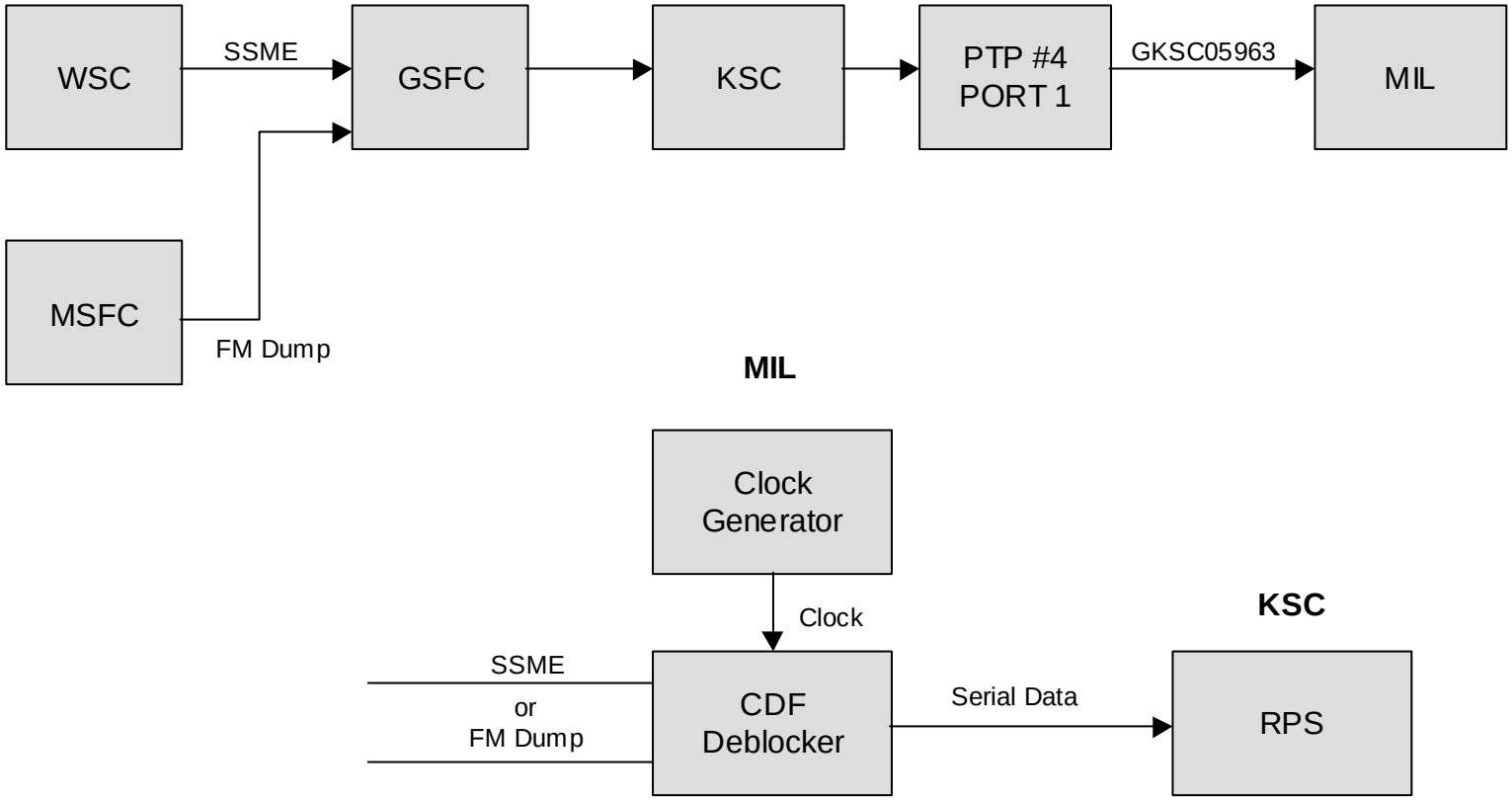

Figure 2-5. Postlaunch Playbacks

Section 3. Radar

3.1 General

The Space Shuttle is skin tracked by NASA and DOD C-band radars during the launch, orbit, and landing phases for landings at EAFB, KSC, and WSSH. AN/FPS-16, MPS-36, and MCB-17 radars output high-rate data (10 points/sec) and are used primarily for launch and landing support. Other radar types (RIR-716, TPQ-18, FPQ-6, FPQ-14, FPQ-15, FPQ-19, MPS-39, ALTAIR, TRADEX, HAIR, and ALCOR) may track and output LSR data (1 point/6 sec) during the orbital phase. HSR data, from those radars geographically suited, is also available from these radars during launch and landing and during periods of DOD performance monitoring. Radars are operated in accordance with this NOSP, operations directives, or operating procedures from the radar operating agency. Refer to Table 3-1 for a cross-reference listing of C-band radars.

3.2 Launch Phase

C-band radars supporting the launch phase and launch phase data flow configuration are shown in Figure 3-1. Launch phase data identification parameters are listed in Table 3-1. Vehicle Identification (VID) codes are listed in Table 3-2.

3.3 Orbit Phase

C-band radars supporting the orbit phase data flow configuration are shown in Figure 3-2. Orbital phase data identification parameters are listed in Table 3-1. In addition to LSR radar support for nominal conditions, HSR radar support can be scheduled for interface checks prior to entry and for contingency situations when LSR data is not available.

3.4 Landing Phase

3.4.1 General

C-band radars supporting the landing phase and landing phase data flow configurations are shown in Figures 3-3 through 3-7. Landing phase data identification parameters are listed in Table 3-1.

Table 3-1. Launch Phase Data Identification Parameters

RADAR JSC	RADAR GSFC	RADAR LOCAL	RADAR TYPE	RANGE	GEOGRAPHIC LOCATION	DATA RATE	HIGH SPEED RATE FORMAT	REFRAC-TION CORR.	HSRID OCTAL	Loop Gain	HSRID BIN CODED DECIMAL	LOW SPEED RATE ID	NASA ID	NASCOP ROUTER	TTY ACQ	INP INTRVL	LAT DEG	LAT MIN	LAT SEC	LONG DEG	LONG MIN	LONG SEC	HEIGHT METERS	MER DEF	P DEF	POINT SPACE AZ	POINT SPACE EL	POINT SPACE RANGE YARDS	POINT SPACE RANGE KM
ANTC	ANTQ	91.14	1 FPQ-14	ER	ANTIGUA ISL	H/L	EFG	Y	221	255	091	E91	4087	GANT	N,I	5 S	17	8	37.1446	298	12	26.9568	1.44	2.35	10.44	0	0	0	0
ASCC	ASCQ	12.15	2 FPQ-15	ER	ASCENSION ISL	H/L	EFG	Y	441	270	121	E70	4045	GASC	N,I	5 S	-7	54	23.8886	345	35	50.9837	56.75	10.27	-6.54	0	0	0	0
ASTC	AS2Q	12.18	1TPQ-18-M	ER	ASCENSION ISL	H/L	EFG	Y	445	244	125	E10	4765	GAST	N,I	5 S	-7	58	22.1025	345	35	56.5769	143.5	-4.93	-3.33	0	0	0	0
CCMC	CN4F	53.17	7 MCB-17	ER	AGENTIA, NEWFNDLND, CN	H	EFG	Y	026	225	016	229	4223	GCRF	N	20 S	47	16	6.4774	305	59	50.7109	17.72	-1.63	-10.41	0	0	0	0
CMTC	CN5F	1.39 (MOTR)	9 MPS-39	ER	CAPE CNVL AFS, FL	H	EFG	Y	027	235	017	E05	4344	GSBN	N	10 S	28	31	1.2745	279	26	11.673	-14.62	0.1	1.6				
CNVC	CNVF	1.16	0 FPS-16	ER	CAPE CNVL AFS, FL	H	EFG	Y	024	220	014	E65	4041	GCVL	N	20 S	28	28	53.8218	279	25	24.6075	-14.61	-0.01	2.3	0	0	0	0
EFFC	EA2F	16.2 (R-41)	0 FPS-16	AFFTC	EDWARDS AFB, CA	H	IRIG	N	065	220	178	W42	4065	GAFT	I	15 S	34	58	13.5965	242	4	6.6854	781.2	-4.8	0.1	300.03	34.39	1479.21	1352.59
FDRC	EAFF	16.1 (R-38)	0 RIR-716	DFRF	EDWARDS AFB, CA	H	IRIG	Y	064	235	177	W39	4064	GDFR	I,N	15 S	34	57	38.3745	242	5	18.41664	780.567	-4.8	0.1	300.03	34.38	1479.34	1352.71
FRCC	FRCF	DFRF-16 (R-34)	0 RIR-716	DFRF	EDWARDS AFB, CA	H/L	IRIG	Y	066	235	176	W43	4069	GDFR	I	30 PT	34	57	38.89931	242	5	18.59245	780.545	-4.1	-0.3	300.04	34.32	1481.14	1354.35
HOLC	HOLF	KING-1, R123	0 FPS-16	WSMR	HOLLOMAN AFB, NM	H	CDF	N	551	230	169	W61	4144	GWDS		5 S	32	54	5.3086	253	54	2.9861	1242.52	-4.63	-7.74	295.36	11.61	2571.97	2351.81
JDIC	JDIQ	28.14	1 FPQ-14	ER	JONATHAN DICKINSON, FL	H/L	EFG	Y	050	255	028	E22	4248	GJDR	N,I	10 S	26	58	58.8628	279	53	30.5395	-7.61	6.63	11.33	0	0	0	0
KMAC	KM2F	ALTAIR	5 ALTAIR	KMR	KWAJALEIN ISL., NQ	H/L	EFG	Y	105	270	045	P92	4971	GKMR	N,I	5 S	9	23	43.5884	167	28	45.4666	65.239	-23.38	-5.93	0	0	0	0
KMLC	KMRF	TRADEX	8 TRADEX	KMR	KWAJALEIN ISL., NQ	H/L	EFG	Y	104	250	044	P02	4968	GKMR	N,I	5 S	9	23	55.5343	167	28	55.7622	59.744	30.47	-12.47	0	0	0	0
KMRC	KMRQ	KWAJ ALCOR	6 ALCOR	KMR	KWAJALEIN ISL., NQ	H/L	EFG	Y	100	260	040	P69	4969	GKMR	N,I	5 S	9	23	55.0032	167	28	58.2864	44.857	30.46	-13.54	0	0	0	0
KPTC	KPTQ	KPT-14	1 FPQ-14	WR	KAENA PT. HAW	H/L	IRIG	Y	346	260	161	P68	4282	GKPT	$,N,I	30S	21	34	19.6779	201	44	0.2645	301.176	9.58	13.61	0	0	0	0
MLAC	MLAQ	19.14	1 FPQ-14	ER	MERRITT ISLAND, FL.	H/L	EFG	Y	621	244	191	E71	4084	GMLA	N,I	10 S	28	25	28.9603	279	20	8.2044	-17.35	-0.73	1.24	0	0	0	0
MLMC	MIMF	19.17	7 MCB-17	ER	MERRITT ISLAND, FL.	H	EFG	Y	044	225	024	E67	4220	GKRC	N	20 S	28	37	33.3955	279	19	1.9423	-18.12	0.73	2.46	0	0	0	0
PATC	PATQ	0.14	1 FPQ-14	ER	PATRICK AFB, FL.	H/L	EFG	Y	001	255	001	E21	4060	GPAT	N,I	10 S	28	13	35.0487	279	24	2.6101	-14.09	0.31	1.25	0	0	0	0
PPMC	PP2F	PTP-36	7 MPS-36	WR	PILLAR PT. CA	H/L	IRIG	Y	032	220	135	W25	TBD	GMPS	$,I	30S	37	29	48.7259	237	30	11.9264	2.87	-6.78	12.67	291.7	55.86	1095.94	1002.13
PTPC	PPTQ	PTP Q-6	3 FPQ-6	WR	PILLAR PT, CA	H/L	IRIG	Y	056	250	162	W46	4260	GPTP	$,N,I	30S	37	29	52.1916	237	30	1.45	19.299	-6.78	12.67	291.7	55.88	1095.76	1001.96
VDBC	CALT	TPQ-18	3 TPQ-18	WR	VANDENBERG AFB, CA	H/L	IRIG	Y	060	250	163	W48	4280	GVNB	$,N,I	30S	34	39	57.0928	239	25	6.7939	88.41	-1.29	4.02	309	41	1322.56	1209.35
VDHC	VD2F	13	4 HAIR	WR	VANDENBERG AFB, CA	H/L	IRIG	Y	030	250	134	W76	4247	GFPQ	$,N,I	30S	34	45	29.6874	239	22	22.3694	26.13935	-3.71	4.1	308.59	41.39	1314.58	1202.1
VDMC	VD3F	MOTR *	9 MPS-39	WR	VANDENBERG AFB, CA	H/L	IRIG	Y	022	235	164	W73	TBD	GVMO	$N	30S	34	34	58.9601	239	26	19.9592	661.419	-4.14	6.09	309.43	40.69	1328.17	1214.48
VDSC	CALF	16.1 (SN 21)	0 FPS-16	WR	VANDENBERG AFB, CA	H/L	IRIG	Y	021	220	165	W47	4018	GFPS	$,I	30S	34	34	57.9165	239	26	18.3099	626.05	-4.07	6.49	309.43	40.69	1328.17	1214.48
VMTC	VD4F	MOTR*	9 MPS-39	WR	VANDENBERG AFB	L		Y	---	230	---	W73	TBD	GVMO		30S	34	34	58.9601	239	26	19.9592	661.419	-4.14	6.09	309.43	40.69	1328.17	1214.48
WHSC	WHSF	C-STA,R113	0 FPS-16	WSMR	WHITE SANDS, NM	H	CDF	N	560	229	170	W07	4143	GWDS		5 S	32	21	28.9629	253	37	48.6696	1210.8	-1.63	-0.7	296.96	11.56	2576.03	2355.52
WLIC	WLPF	RADAR 3 (SN-8)	0 FPS-16	WFF	WALLOPS ISL, VA	H/L	MDDF	N	523	220	153	Z53	4840	GRIW	N,I	30 PT	37	50	28.8676	284	30	53.6676	-25.06	-2.28	1.58	0	0	0	0
WLMC	WL3F	RADAR 10	7 RIR-778	WFF	WALLOPS ISL, VA	H/L	MDDF	N	530	220	158	Z87		GBIW	N,I	30 PT	37	51	22.4642	284	29	17.5666	-18.13	-2.5	1.15	0	0	0	0
WLPC	WLPQ	RADAR 5	FPQ-6	WFF	WALLOPS ISL, VA	H/L	MDDF	N	521	244	151	Z86	4860	GBIW	N,I	30 PT	37	51	36.9842	284	29	26.5226	-22.98	-2.48	1.37	0	0	0	0
WLRC	WL2F	RADAR 18 (SN 49)	0 FPS-16V	WFF	WALLOPS ISL, VA	H/L	MDDF	N	522	225	152	Z52	4841	GWAC	N,I	30 PT	37	56	38.8037	284	32	8.784	-15.53	-2.67	1.17	0	0	0	0
WSMC	WSMF	WSMR R971	9 MPS-39	WSMR	WHITE SANDS, NM	H	CDF	Y	603	235	183	W72	TBD	GWDS	I, N	5 S	32	21	37.9734	253	37	34.6225	1207.25	-1.63	-0.5	296.96	11.59	2576.03	2355.08
WSMS	ALAY	ALAMO PEAK	INP-REF	WSMR	WSMR REF LOCATION					0		W72		GWDS		5 S	32	52	21.123	254	11	15.501	2805.71	-1.7	21.2				
WSSC	WH6F	STALLION,R127	0 FPS-16	WSMR	STALLION,NM	H	CDF	N	600	229	180	W29	4145	GWDS		5 S	33	48	49.9052	253	20	27.5836	1510.78	-2.73	0.06	293.12	12.88	2476.7	2264.69

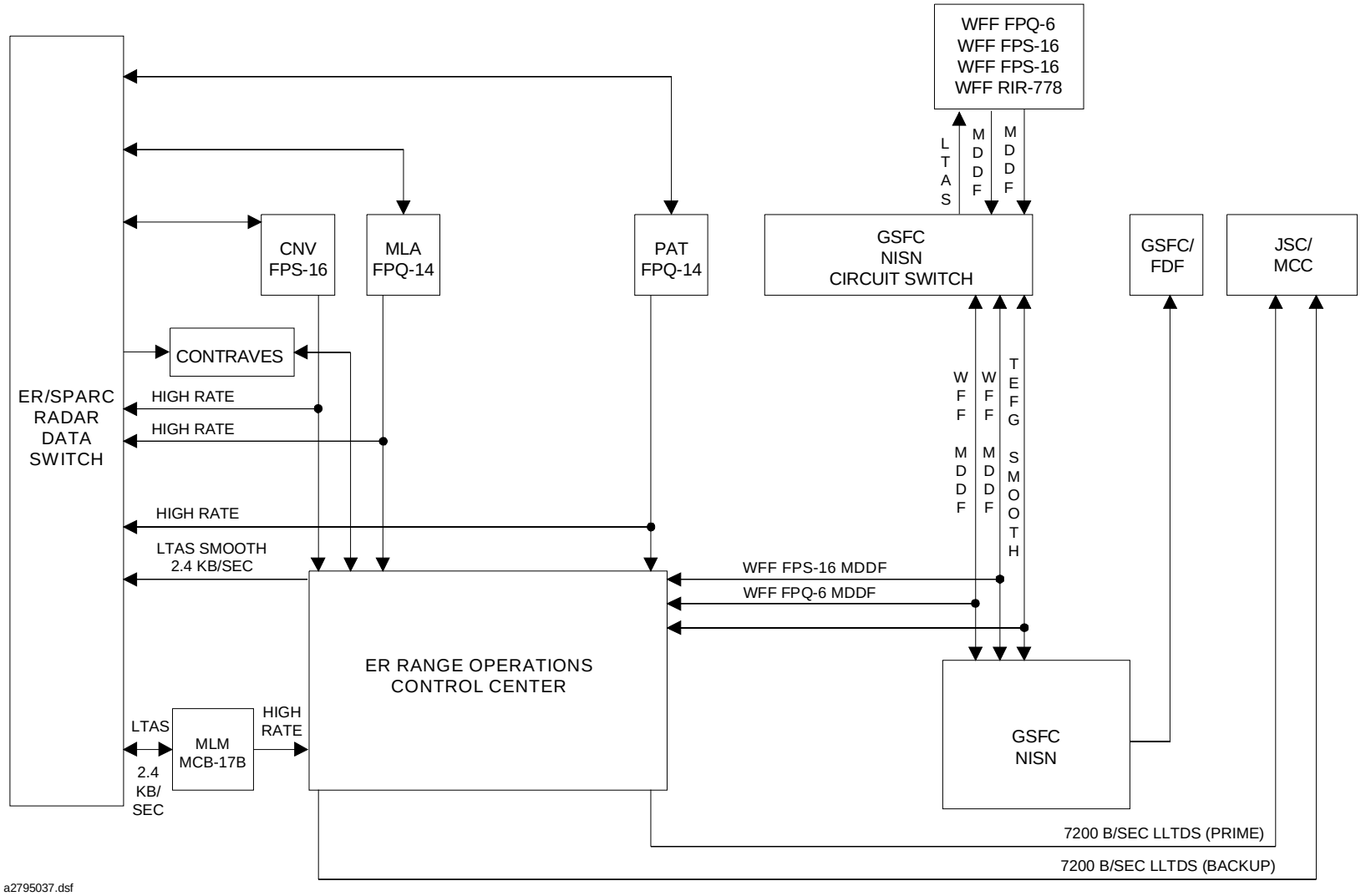

Figure 3-1. Launch Phase C-band Metric Data System

Table 3-2. Vehicle Identification Codes for Space Shuttle

Vehicle	Code						
	IRIG	IRV	IIRV	INP	TEFG	MDDF	46 Char
SSO		05	05	05	05 (binary)	05 (binary)	5
Space Shuttle, ET, and SRB		05	05	05	05 (binary)	05 (binary)	5
Space Shuttle and ET		05	05	05	05 (binary)	05 (binary)	5
ET		NA	NA	NA	02 (binary)	02 (binary)	2
SRB-left		NA	NA	NA	3 (binary)	NA	3
SRB-right		NA	NA	NA	04 (binary)	NA	4

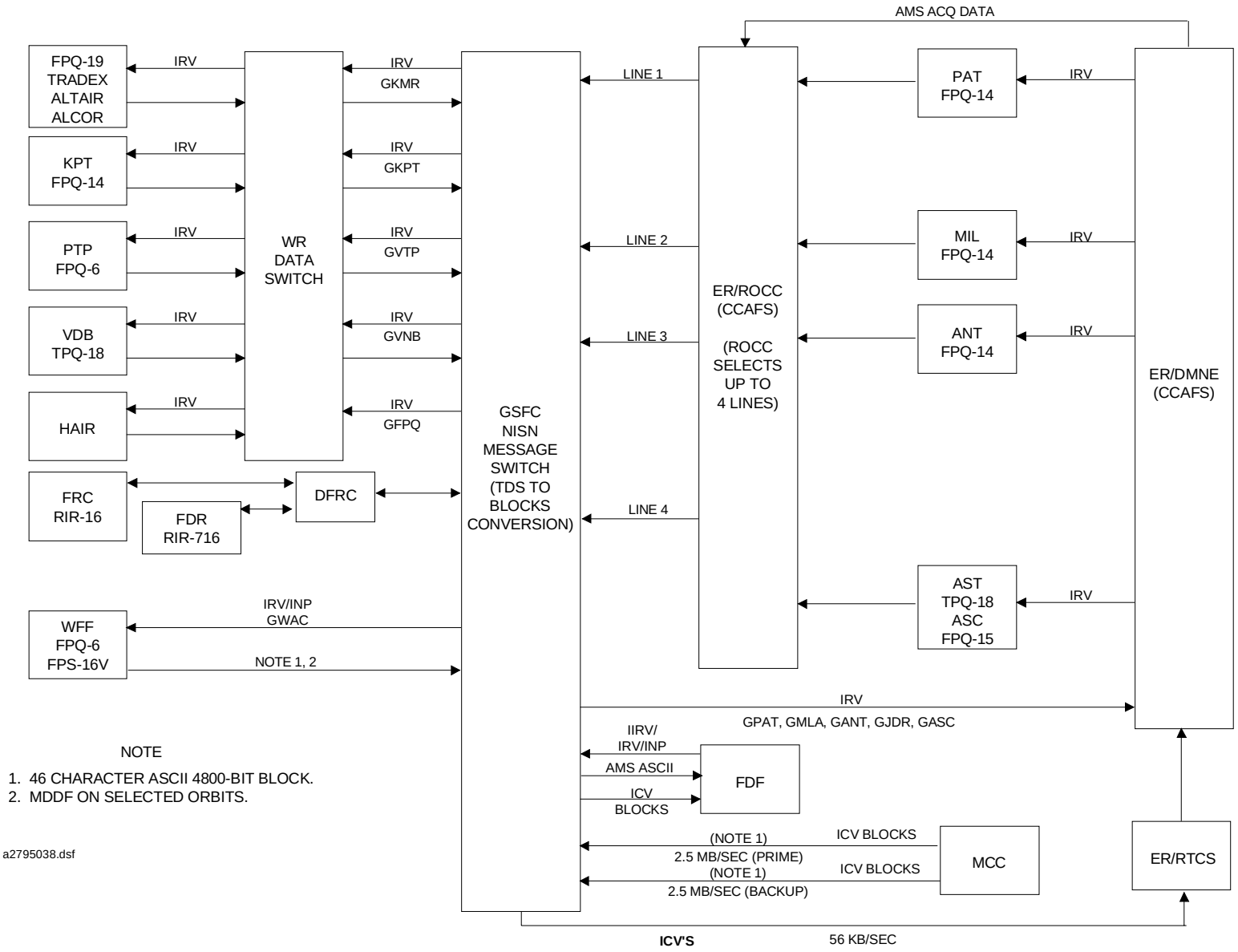

Figure 3-2. Orbit Phase C-band Metric Data System

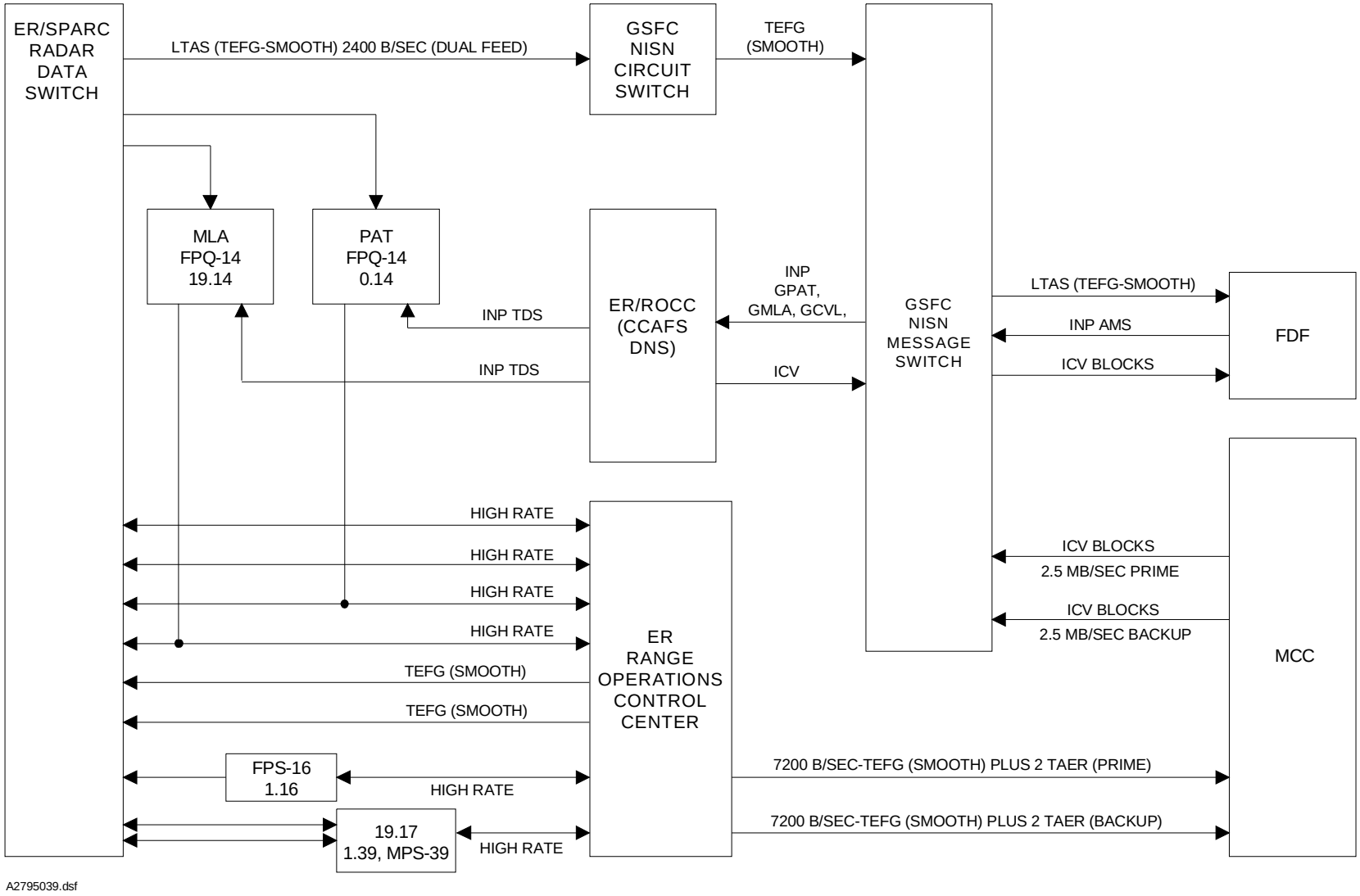

Figure 3-3. Landing Phase C-band Metric Data System (KSC Landing) LTAS (TEFG-smooth) 2400 b/sec

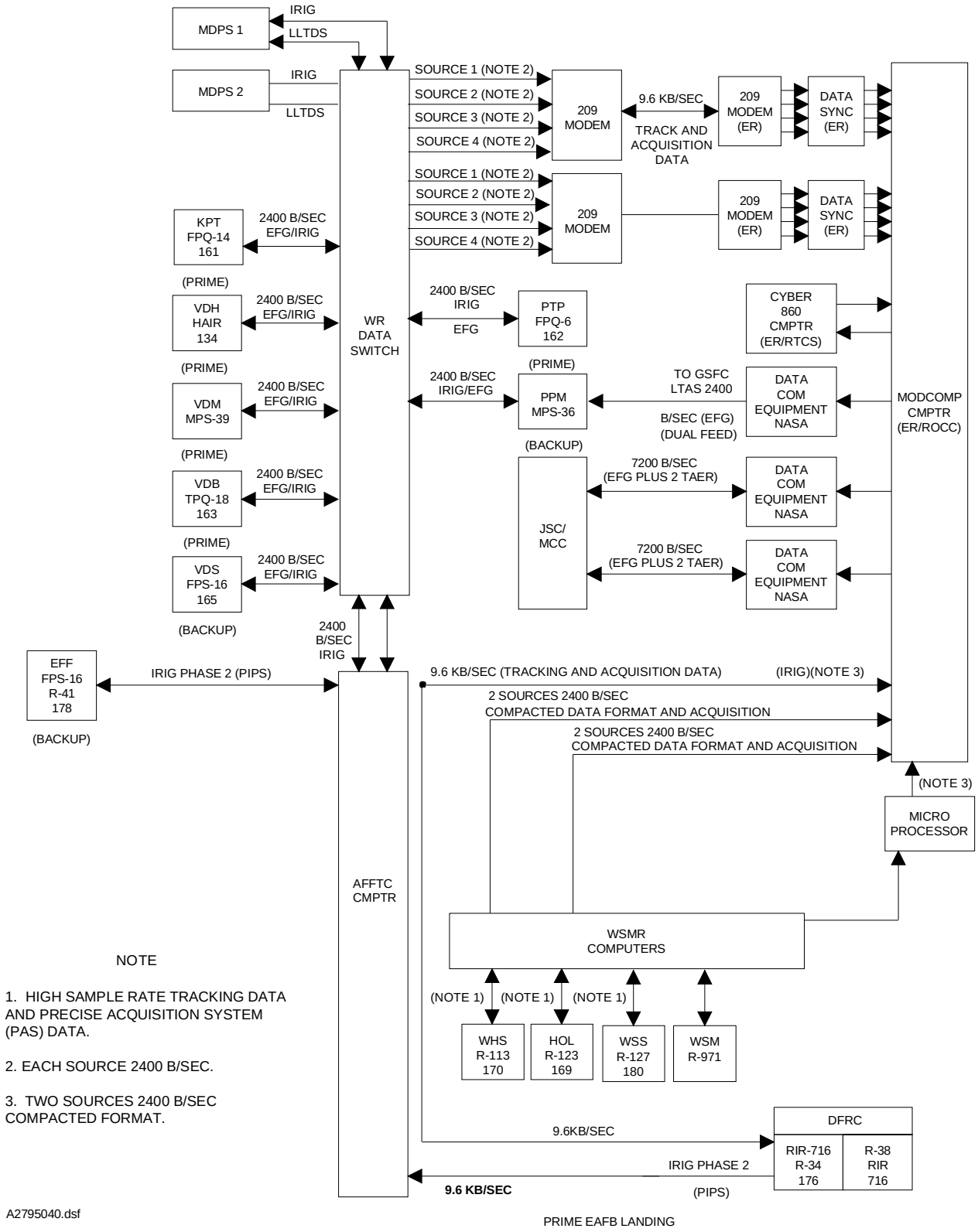

Figure 3-4. Landing Phase C-band Metric (High Rate) Data System for Space Shuttle (Northrup Strip or EAFB Landings)

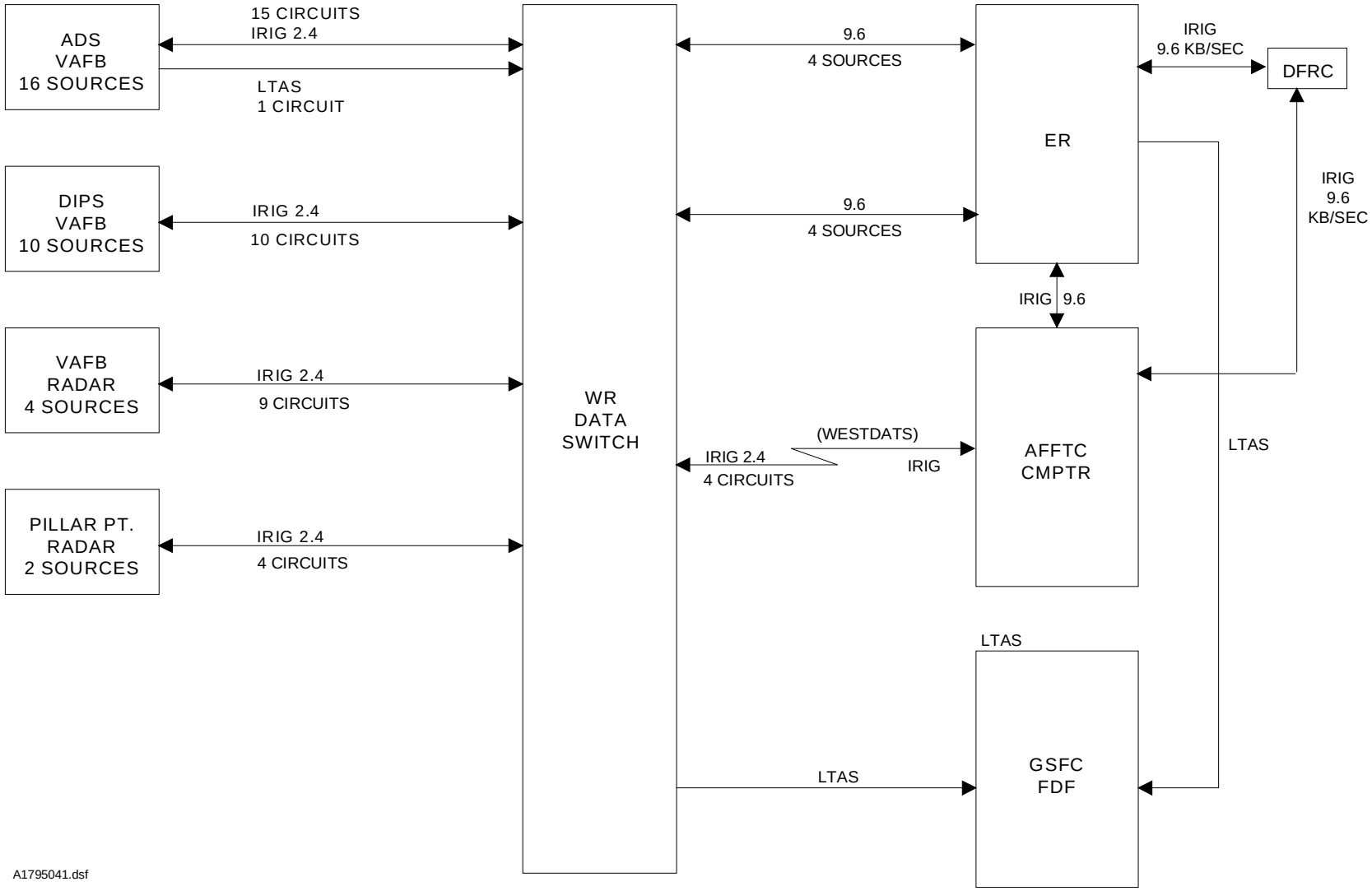

Figure 3-5. Landing Phase C-band Metric Acquisition Data System for Space Shuttle (WSSH or EAFB Landings)

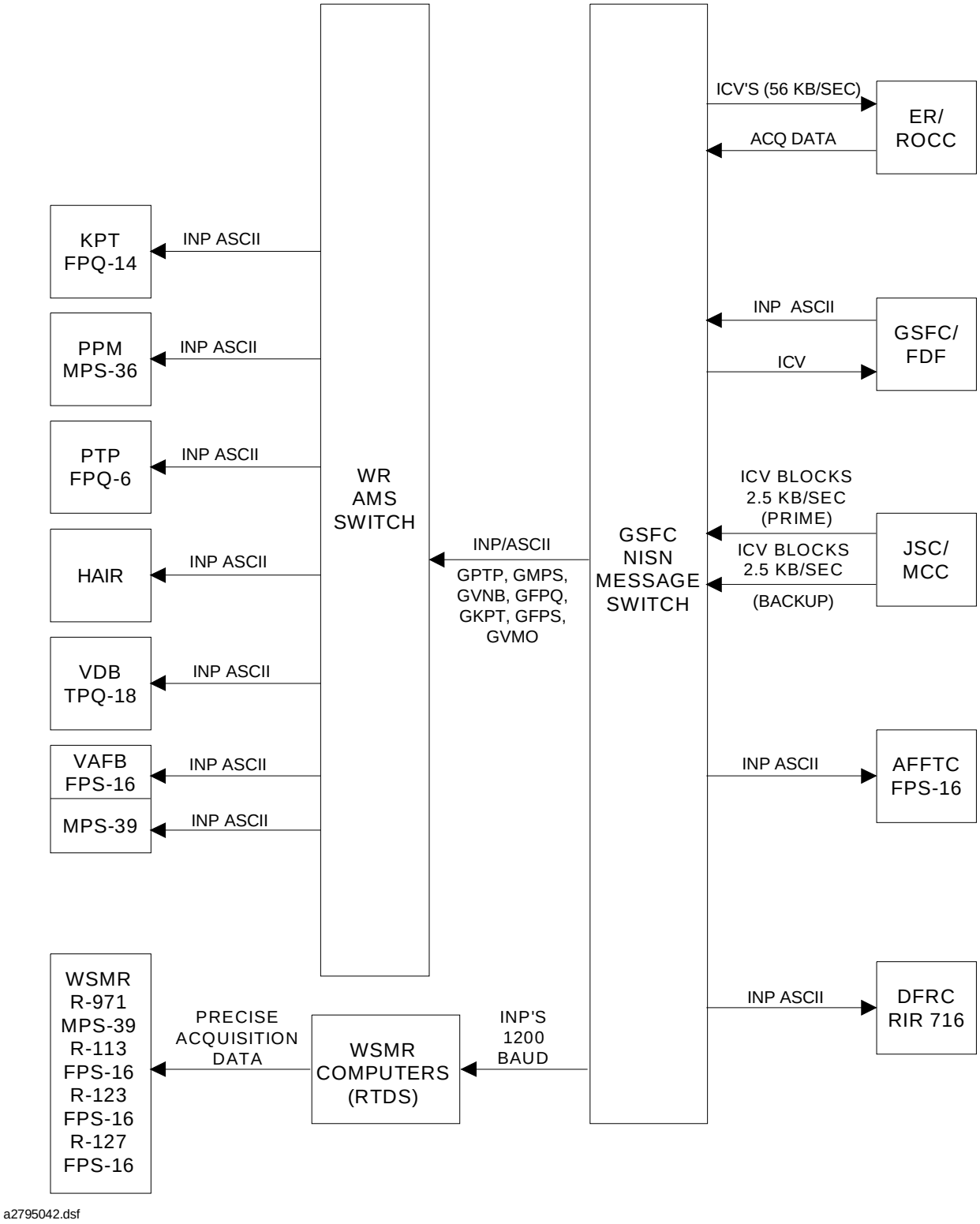

Figure 3-6. Landing Phase C-band Metric (Low Rate) Acquisition Data System for Space Shuttle (Northrup Strip or EAFB Landings)

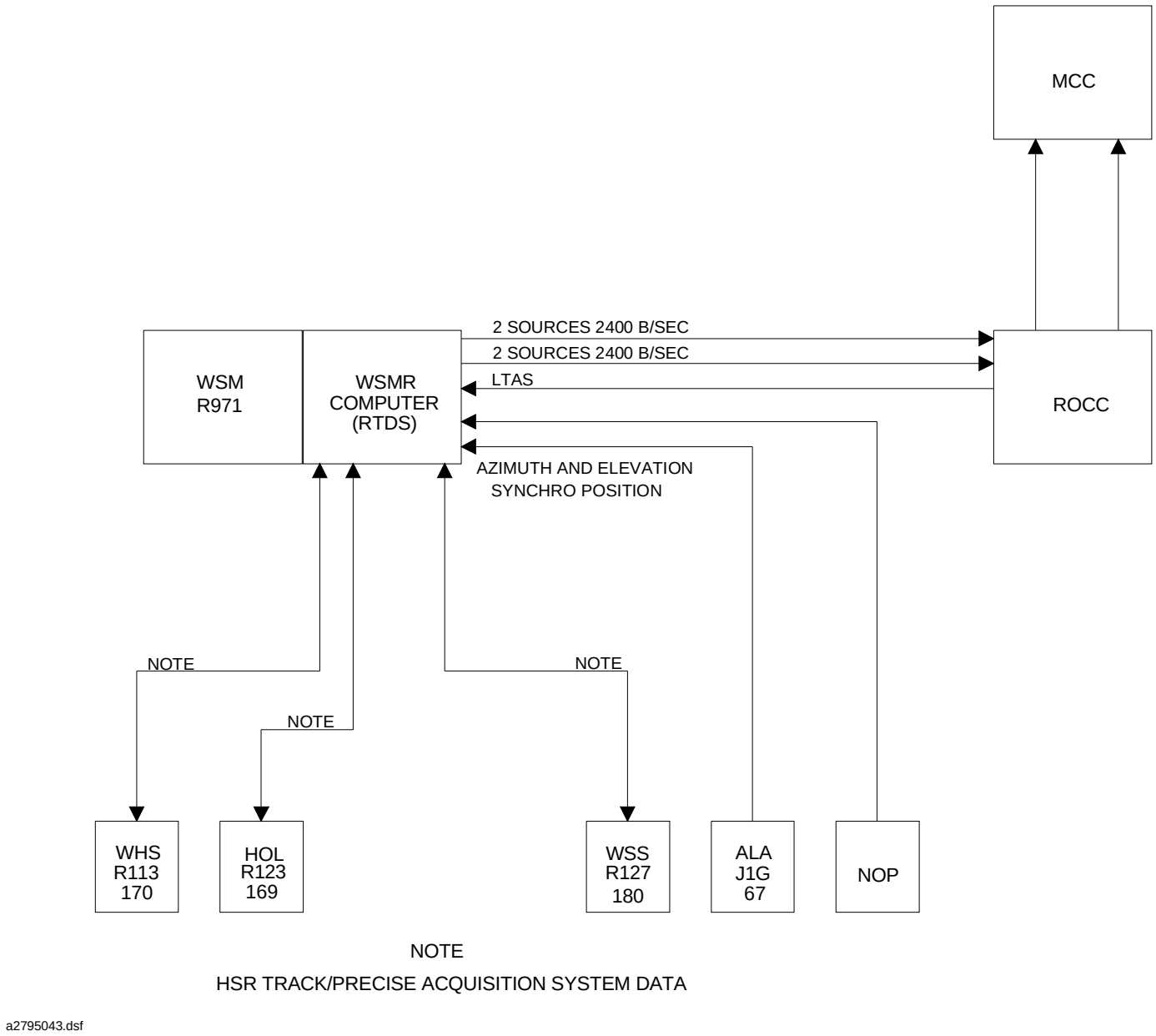

Figure 3-7. AOA Landing Phase C-band Metric (High Rate) Data System for Space Shuttle Northrup Strip Landings

3.4.2 Landing Phase Computing Center Support

During the landing phase, DOD and NASA computing centers are required to perform the following functions:

a. DFRC Data. Dryden Data formats and transmits two 2.4 bps IRIG data streams from AFFTC or Dryden directly to the ER/ROCC. Two Dryden data streams are also transmitted to AFFTC computers.

b. AFFTC Computers. The AFFTC computer center reformats the DFRC and AFFTC radar data received to 2400-b/sec, 10-points/sec IRIG format for transmission to ER/ROCC via WR. Real-time acquisition (tracking) data received from WR or ER is converted to a format which can be used by AFFTC and DFRC.

c. WR Data Switch. The WR data switch selects and switches up to eight sources of high-speed rate tracking data for transmission to ER/ROCC. The Data Switch selects and provides data from a tracking radar for real-time acquisition data for radars which have not yet acquired. The FDF Internet Predicts (INP) are distributed to WR and FPS-16 radars.

d. WR Computers. The WR Acquisition Data System (ADS) computer processes tracking data from WR and AFFTC/Dryden radars, selects up to three best sources of radar data, outputs best source Launch Trajectory Acquisition System (LTAS) data to GSFC, and outputs best source(s) to requiring sensors via the WR data switch.

e. ER. ER processes tracking data received from WR, AFFTC, WSMR, and ER radars; selects the two best sources of radar data; outputs smooth TEFG data to JSC; and outputs the LLTDS (AER) to JSC. ER outputs Earth Fixed Geocentric (EFG) (LTAS) to GSFC and WSMR, and IRIG (AER) to WR and EAFB.

f. WSMR Real-time Operational Computer System. WSMR Real-time Operational Computer Data System (ROCS) processes tracking data received from WSMR radars. Data from two radars is reformatted into the compressed data format and transmitted from WSMR ROCS to ER/ROCC on one circuit at 2.4 kb/sec. Normally, two 2.4-kb/sec circuits are used to carry data from four radars simultaneously. If one circuit fails, WSMR selects the two best sources for transmission to ER on the remaining circuit. WSMR ROCS provides acquisition data to WSMR.

3.4.3 Landing Phase Acquisition

ER and WR radars use the acquisition scanning parameters for initial acquisition. Detailed acquisition procedures for 45 SPW and 30 RANS may be found in 45 SPW/30 RANS Operations Directives (45 SPW 26012) (30 RANS 2200).

3.5 Tracking Coordination Voice Communications Circuit

Refer to Table 1-4 for the voice communications positions and callsigns for the Tracking Coordination (TRACK COORD).

3.6 DOD Radars

3.6.1 General

The information in this section pertains to the DOD radars at ER, WR, KMR, AFFTC, DFRC, and WSMR, and NASA radars at DFRC and WFF. These radars may support Space Shuttle launch, orbit, and landing phases.

3.6.2 Phasing

Phasing for KSC launches requires that autophasing, with manual phasing, if required, be used for all periods of orbital support.

3.6.3 Atmospheric Refraction Correction

3.6.3.1

The following C-band stations will transmit tracking data corrected for atmospheric refraction:

Station	Antenna
Antigua	ANTC-FPQ-14
Ascension	ASCC-FPQ-15
Ascension	ASTC-TPQ-18
Cape Canaveral	CNVC-FPS-16
Cape Canaveral	CMTC-MPS-39
DFRC	FRCC-RIR-716
DFRC	FDRC-RIR-716
Kaena Point	KPTC-FPQ-14
Kwajalein	KMAC ALTAIR
Kwajalein	KMRC-ALCOR
Kwajalein	KMTC-FPQ-19
Kwajalein	KMLC-TRADEX

Merritt Island	MLAC-FPQ-14
Merritt Island	MLMC-MCB-17
Patrick AFB	PATC-FPQ-14
Point Pillar	PTPC-FPQ-6
Point Pillar	PPMC-MPS-36
Vandenberg	VDSC-FPS-16-1
Vandenberg	VDHC-HAIR
Vandenberg	VDBC-TPQ-18
Vandenberg	VDMC-MPS-39
Vandenberg	VDTC-MPS-39
WSMR	WSMC-MPS-39

3.6.3.2

The following C-band stations will transmit tracking data without atmospheric refraction correction:

Station	Antenna
EAFB	EFFC-FPS-16
Holloman AFB	HOLC-FPS-16
Stallion Station	WSSC-FPS-16
Wallops	WLIC-FPS-16
Wallops	WLPC-FPQ-6
Wallops	WLRC-FPS-16
White Sands	WHSC-FPS-16

3.6.4 Onsite Weather Observations/Reporting

Stations supporting launch/landing are required to provide local onsite reading of dry bulb temperature, wet bulb temperature, and atmospheric pressure as follows:

a. Prelaunch. At 1-1/2 hours prior to scheduled lift-off and at 1 hour intervals until lift-off:

   1. MLA and WFF for launch support.
   2. EFF for EAFB AOA landing support.
   3. WHS, Holloman AFB (HOL), and White Sands Station (WSS) for White Sands Space Harbor (WSSH).

b. Prelanding. At 1-1/2 hours prior to scheduled deorbit (repeated if deorbit is delayed):

   1. EFF for EAFB landing support.

   2. WHS, HOL, and WSS for WSSH landing support.

c. Real-time Reports. The requested information is assembled by ER DOD Com and transmitted by Fax (refer to Section 16) to MCC/DFE and NAV support. Time-critical data may be voiced to DFE on the TRACK COORD. Measurement units to be used are those actually used at the measuring station:

   1. Wet and dry bulb temperature in degrees Fahrenheit.

   2. Atmospheric pressure in millibars (except WHS, HOL, and WSS which use inches of mercury).

3.6.5 Frequencies

Radars supporting the reentry and landings at EAFB and WSSH will be operated at different frequencies. Frequencies will be coordinated by the West Coast Area Frequency Coordination Facility to preclude interference between radars. These frequencies may be found in the 30 RANS Operations Directive 2200.

3.6.6 Data Disposition

Data disposition for postmission is provided in Section 11, paragraph 11.2.4.

3.7 Wallops Island Support Procedures

3.7.1 Documentation

The information in this section supplements the procedures outlined in the *Network Operations Procedures for C-band Radar Systems*, STDN No. 502.3, which is required to support the Space Shuttle mission.

3.7.2 Requirements

WFF radars, in conjunction with DOD radar, provide support for KSC launches and for all phases of orbital support in the Space Shuttle program. Geographic location of the stations precludes their participation in any normal landing support. Radar skin-tracks the Space Shuttle as required in the tracking schedule. Refer to Table 3-1 for launch and orbit support parameters.

3.7.3 Tracking Data

3.7.3.1 Launch Support

Radars transmit high-speed 2.4-kb/sec tracking data in real time, using the MDDF outlined in STDN No. 502.3. The data is routed to ER/ROCC for selected extension to JSC.

3.7.3.2 Launch/Ascent Radar Requirements and Preferences

For high-inclination ascent support, Wallops radars WLPC, WLRC, and WLIC will nominally be scheduled. Specifically, it is acceptable to schedule only WLPC and WLRC for ascents other than 57-degree inclination. For 57-degree inclination missions WLPC, WLRC, and WLIC are required to meet the Range requirement for redundant high-speed tracking data for 57-degree inclination missions. The logic allows for one radar to fail during the launch count for a 57-degree mission and still meet the Range requirement.

3.7.3.3 Wallops Island Launch/Ascent Contingency Main Engine Failure Support

In case of failure of all three SSMEs during launch, the following will be required:

a. WLPC will track the Orbiter.

b. The secondary radar (WLRC) will track the ET.

c. If two radars fail, the first priority is the Orbiter.

3.7.3.4 Orbital Support

Low-speed data only (except selected passes which require HSR data for radar evaluation) is required for orbital support of Space Shuttle.

3.7.4 Acquisition Data

Acquisition data sources in order of priority are as follows:

a. LTAS.

b. Ontrack system.

c. Postlaunch Interrange Vector (IRV) or INP.

d. Prelaunch INP.

3.7.5 Support Configuration

3.7.5.1 C-band Support

All C-band support is performed in the skin-track mode as outlined in STDN No. 502.3.

3.7.5.2 PRF

PRF is 160 p/sec for skin-tracking of the Space Shuttle.

3.7.6 Low-Speed Data Header

The AMS tracking data header for each point (1 point/6 sec) line of low-speed data for Space Shuttle support is normally JJ for WFF. Refer to STDN No. 724 for other headers and identifiers. The NISN TDS inserts each point (line) of data into a 4800-bit block for transmission to MCC. Refer to Section 1 for block destination code setting procedures.

3.7.7 C-Band Acquisition Procedures

WFF radar acquisition procedures are performed as outlined in STDN No. 502.3.

3.7.8 System Recorders

Function and event recorders are operated as outlined in STDN No. 502.3.

3.7.9 Data Disposition

Data disposition and DSS number assignments are provided in Section 11.

3.7.10 Phasing

3.7.10.1

There are no autophasing requirements for WFF unless the following frequency assignments cannot be supported. The ER Radar Controller, CAT-1, will then assign phasing slots and require pre-launch phasing checks to be performed with ER radars.

a. WLPC: 5650 MHz.

b. WLMC: 5675 MHz.

c. WLRC: 5455 MHz.

3.7.10.2

Manual phasing, if required, is used for all periods of orbital support. Manual phasing procedures are provided in STDN No. 502.3.

3.7.11 Atmospheric Refraction Correction

STDN C-band trackers (WFF) will transmit MDDF tracking data without atmospheric refraction correction.

3.7.12 Reporting

Refer to STDN No. 502.3 for verbal reporting and Section 16 of this NOSP for tracking summary message reporting.

3.8 United States Space Command ET Support

3.8.1 Launch Phase Support

a. ET trajectory determination and impact prediction require WFF FPQ-6 C-band radar data to be provided to the Space Surveillance Center (SSC), Cheyenne Mountain Air Force Station (CMAFS) at Headquarters (HQ) United States Space Command (USSPACE COM). ANT replaces WFF for Space Shuttle low-inclination launches. ANT will track the ET, after separation from the Orbiter, on a best effort basis.

b. At WFF, FPQ-6 C-band radar will transmit real-time tracking data AMS format, B-3, type 2, LSR to GSFC for forwarding to SSC via NCC Communications Center (GCEN). During the ascent phase, the tracking data will be transmitted from MECO minus 1 minute to LOS. WFF will provide ET support for Space Shuttle high-inclination launches.

NOTE

1. The C-band radars at WFF are required to skin-track the Orbiter throughout the ascent phase.

2. Stripchart recorder block diagram

Ungated AGC	Strip chart
Gated AGC	
Time Code	Recorder

3. Run recorder at 20 mm/sec. The recording (DSS-450) is to be shipped to 45 SPW in accordance with Section 11.

4. ANT data is transmitted to SSC in real time or post-pass as soon as possible.

c. At WFF, to enhance the ET signature analysis, the pulse width selection will have to be altered (refer to note). This pulse width selection will allow better tracking of the primary target (Orbiter), while minimizing interaction of the ET with the radar tracking gate. The radar operator will select the pulse width after the OPSR confirms the sequence of events as stated in the note.

NOTE

Pulse Width Selection

Horizon: 1.0 microsecond

MECO: 0.5 microsecond

OMS-1 ignition: 1.0 microsecond

3.8.2 Orbital Support

WFF will transmit tracking data to SSC on all scheduled passes. Five observations per pass will be transmitted. The WFF NISN operator will select these five consecutive points. The SSC object number will be supplied by the NOM.

Section 4. S-band

4.1 General

The information in this section provides checklists, reference documents and procedures for S-band RF and Tracking Systems, which are required for support of the Space Shuttle launch, orbit, and landing. Only MILA is authorized for S-band ranging/tracking during the launch, on-orbit, and landing phases of the mission.

4.2 Station Support

4.2.1 General

Station S-band support consists of various combinations of metric tracking, CMD, real-time TLM, and voice from the SSO. Refer to Table 1-5 for station support assignments.

4.2.2 Launch Pad Support

MIL provides prelaunch support and transponder measurements in accordance with Space Shuttle launch pad support procedures.

4.2.3 Scheduling/Predicted Coverage

Tracking schedules defining station support are provided by the White Sands Scheduling Office.

4.2.4 Link Description and MOD Indices

4.2.4.1 OD DL (2217.5/2287.5 MHz PM Ops)

a. Refer to Section 2 for DL characteristics.

b. Refer to Table 4-1 for OD DL mod indices.

4.2.4.2 FM DL (2250.0 MHz FM Ops)

a. Refer to Section 2 for DL characteristics.

b. Refer to Table 4-2 for FM DL mod indices.

4.2.4.3 PM UL

a. Refer to Table 1-3 for PM UL characteristics.

b. Refer to Table 4-3 for PM UL description and mod indices.

c. Refer to Table 4-4 or local Work Instructions for Space Shuttle Receiver-Exciter-Ranging (RER) recommended preset assignments.

Table 4-1. OD DL, 2217.5-/2287.5-MHz PM Ops Downlink Mod Indices (1 of 2)

DL Mode	Function	Mod Technique	Ranging Subcarrier Freq (MHz)	Subcarrier Deviation (rad)	Carrier Deviation (rad)
00	No carrier	NA			
01	Carrier only	None			
02	96 kb/sec (1 voice at 32 kb/sec and 1 TLM at 64 kb/sec)	TDM/PM			0.55 ±10% (1.4 dB)
03	192 kb/sec (2 voice at 32 kb/sec each and 1 TLM at 128 kb/sec)	TDM/PM			0.55 ±10% (1.4 dB)
04	96 kb/sec (1 voice at 32 kb/sec and 1 TLM at 64 kb/sec) plus ranging on subcarrier	TDM/FDM/PM PM	1.7 (During two- way lock only)	0.6 (for each S/C tone)	TDM 0.55 (1.4 dB) RNG SC 1.0 (2.32 dB) +20% -10%
05	192 kb/sec (2 voice at 32 kb/sec each and 1 TLM at 128 kb/sec plus ranging on subcarrier	TDM/FDM/PM PM	1.7 (During two-way lock only).	0.6 (for each S/C tone)	TDM 0.55 (1.4 dB) RNG SC 1.0 (2.32 dB) +20% -10%

Table 4-1. OD DL, 2217.5/2287.5-MHz PM Ops Downlink Mod Indices (2 of 2)

DL Mode	Function	Mod Technique	Ranging Subcarrier Freq (MHz)	Subcarrier Deviation (rad)	Carrier Deviation (rad)
06		TDM/PM (LBR encoded)			.55 (GN)
07		TDM/PM (HBR encoded)			.55 (GN)
08		TDM/PSK (LBR unencoded)			1.57 (TDRSS)
09		TDM/PSK (HBR unencoded)			1.57 (TDRSS)
10		TDM/PSK (LBR encoded)			1.57 (TDRSS)
11		TDM/PSK (HBR encoded)			1.57 (TDRSS)

NOTE

1. DL modes 04 and 05 are not applicable to AFSCN or DFRC.
2. Polarization is Right-Hand Circular (RHC).
3. All TDRSS Modes are PSK and require MFR configured for FM Auto Track with I/F Bandwidth of 1.5 MHz.

Table 4-2. FM DL, 2250.0-MHz FM Ops Downlink Mod Indices (1 of 2)

DL Mode	Function	Mod Technique	Subcarrier Freq (kHz)	Subcarrier Deviation (rad)	Carrier Deviation (peak)
00	No carrier	NA			
01	Carrier only	None			NA
02	PB 192 kb/sec (PCM at 1:1 forward)	FM			635 kHz
03	PB 192 kb/sec (PCM at 5:1 forward)	FM			635 kHz
04	PB 128 kb/sec (PCM at 1:1 forward)	FM			635 kHz
05	PB 128 kb/sec (PCM at 8:1 forward)	FM			635 kHz
06	PB 60 kb/sec (SSME data at 1:1 forward)	FM			635 kHz
07	PB 60 kb/sec (SSME data at 16:1 foward)	FM			635 kHz
08	PB 96 kb/sec (PCM at 8:1 forward)	FM			635 kHz
09	PB 96 kb/sec (PCM at 8:1 reverse)	FM			635 kHz
10	(Unassigned)				
11	(Unassigned)				
12	PB 192 kb/sec (PCM at 1:1 reverse)	FM			635 kHz
13	PB 192 kb/sec (PCM at 5:1 reverse)	FM			635 kHz
14	PB 128 kb/sec (PCM at 1:1 reverse)	FM			635 kHz

Table 4-2. FM DL, 2250.0-MHz FM Ops Downlink Mod Indices (2 of 2)

DL Mode	Function	Mod Technique	Subcarrier Freq (kHz)	Subcarrier Deviation (rad)	Carrier Deviation (peak)
15	PB 128 kb/sec (PCM At 8:1 reverse)	FM			635 kHz
16	PB 60 kb/sec (SSME data at 1:1 reverse)	FM			635 kHz
17	PB 60 kb/sec (SSME data at 16:1 reverse)	FM			635 kHz
18	(Unassigned)				
19	(Unassigned)				
20	(Unassigned)				
21	(Unassigned)				
22	Real Time (R/T) 60 kb/sec (SSME data)	PSK/FDM/FM	576 768 1024	1.57 1.57 1.57	635 kHz 635 kHz 635 kHz (Note 1)
23	Television	FM			4.5 MHz
24	Payload (analog)	FM			2.0 MHz (Note 2)
25	Payload (digital)	FM			2.0 MHz (Note 2)
26	DOD (narrowband)	FM			635 kHz

NOTE

1. Each subcarrier deviation is individually set up.
2. Refer to the appropriate mission annex for payload requirements.

Table 4-3. 2041.9-/2106.4-/1831.8-/1775.7-MHz UL Description and Mod Indices (1 of 2)

UL Mode	Function	Mod Technique (MHz)	Subcarrier Freq (rad)	Subcarrier Deviation (rad) (peak)	Carrier Deviation
OFF	No carrier	NA			
000	Carrier only	None			
24L	32 kb/sec (1 voice at 24 kb/sec and 1 CMD at 8 kb/sec)	TDM/PSK			1.57
24C	96 kb/sec (voice at 24 kb/sec and 1 CMD at 8 kb/sec, encoded at 1/3 rate)	TDM/PSK			1.57
24H	72 kb/sec (2 voice at 32 kb/sec and 1 CMD at 8 kb/sec)	TDM/PSK			1.57
24K	216 kb/sec (2 voice at 32 kb/sec each and 1 CMD at 8 kb/sec, encoded at 1/3 rate	TDM/PSK			1.57
25L	32 kb/sec (1 voice at 24 kb/sec and 1 CMD at 8 kb/sec) plus ranging on subcarrier	PM/FDM/PM TDM	1.7	0.6 (for each tone)	TDM 1.25 (10.03 dB) RNG 1.0 (2. 32 dB) ±10%
25C	96 kb/sec (1 voice at 24 kb/sec and 1 CMD at 8 kb/sec, encoded at 1/3 rate) plus ranging on subcarrier	PM/FDM/PM TDM	1.7	0.6 (for each tone)	TDM 1.3 ±5% (10.03 dB) RNG 1.0 (2.32 dB) ± 10%
25H	72 kb/sec (2 voice at 32 kb/sec each and 1 CMD at 8 kb/sec) plus ranging on subcarrier	PM/FDM/PM TDM	1.7	0.6 (for each tone)	TDM 1.25 (10.03 dB) RNG 1.0 (2.32 dB) ±10%

Table 4-3. 2041.9-/2106.4-/1831.8-/1775.7-MHz UL Description and Mod Indices (2 of 2)

UL Mode	Function	Mod Technique (MHz)	Subcarrier Freq (rad)	Subcarrier Deviation (rad) (peak)	Carrier Deviation
25K	216 kb/sec (2 voice at 32 kb/sec each and 1 CMD at 8 kb/sec encoded at 1/3 rate) plus ranging on subcarrier	PM/FDM/PM TDM	1.7	0.6 (for each tone)	TDM 1.3 ±5% (11.50 dB) RNG 1.0 (2.32 dB) ±5%
24 CT (4)	96 kb/sec (voice at 24 kb/sec and 1 CMD at 8 kb/sec encoded at 1/3 rate) PN spreading on	TDM/PSK			
24KT (4)	216 kb/sec (2 voice at 32 kb/sec and 1 CMD at 8 kb/sec, encoded at 1/3 rate) PN spreading on	TDM/PSK			

NOTE

1. Power:

18m (60 ft)	14m (46 ft)	10m (33ft)	9m	7m	4.3m
10 kW (NHS-A) 7 kW (GTS-A, VTS-A,) 2.5 kW (HTS-A, TCS-A [26ft])	2.5 kW (GTS-B, HTS-B NHS-B, VTS-B TTS-B)	2.5 kW (CTS, DGS, TCS-B, TTS-C)	200W	100 W (DFRC)	200 W PDL

2. Mode Select Matraix (MSM) mode applies to stations without RER upgrade.
3. In mode 25, if problems are experienced acquiring the coll tower simulator for ranging purposes, stations may range using a zero-delay turnaround. When using zero-delay, disable both axes, and select autotrack in order to set the propper status displays at JSC and GSFC
4. Used only in accordance with OMI V1117 during the terminal count (MIL/PDL only).

Table 4-4. Space Shuttle RER Preset Assignments

Preset ID	Transmit Freq. (MHz)	Receive Freq. (MHz)	UL/Mode	Modulation	Antenna Type
30	2106.4063	2287.5	24L/24H	TDM/PSK	Main
31	2106.4063	2287.5			acq
32	2106.4063	2287.5	24C/24K	TDM/PSK	Main
33	2106.4063	2287.5			acq
34	2106.4063	2287.5	25L/25H	PM/FDM/TDM RNG	main
35	2106.4063	2287.5			acq
36	2106.4063	2287.5	25C/25K	PM/FDM/TDM	Main
37	2106.4063	2287.5			acq
38	N/A	2287.5	N/A	PSK/TDRS	main
40	2041.9479	2217.5	24L/24H	TDM/PSK	Main
41	2041.9479	2217.5			acq
42	2041.9479	2217.5	24C/24K	TDM/PSK	Main
43	2041.9479	2217.5			acq
44	2041.9479	2217.5	25L/25H	PM/FDM/TDM RNG	main
45	2041.9479	2217.5			acq
46	2041.9479	2217.5	25C/25K	PM/FDM/TDM RNG	main
47	2041.9479	2217.5			acq
48	2041.9479	2217.5	24CT/24KT	TDM/PSK	(Note)
50	N/A	2250.0	SSME dump	FM	main
51	N/A	2250.0	23, TV	FM	main
52	N/A	2250.0	2-17,22,26	FM	main
53	N/A	2250.0	24	FM	main
54	N/A	2250.0	25	FM	main

NOTE

Used only in accordance with OMI V1117 during the terminal count (MIL/PDL only).

d. Refer to local Work Instructions for Space Shuttle/RER uplink and mod index procedures.

e. Refer to paragraph 4.2.4.5 for verification receiver alignment procedures.

4.2.4.4 Shuttle Uplink Mod Index Procedures

a. General. Ensure Modulation Interface Assembly (MIA) and phase modulator modules are aligned.

b. Modulation Indices Setup Procedures, Mode 24L/24H

1. At the NCPS, select 72 kb/sec in the SAFE mode.
2. At the exciter, recall desired preset ( ) for PSK uplink high frequency (2106.4063 MHz).
3. Turn modulation off.
4. Tune the spectrum analyzer to 140 MHz to center the carrier on the display.
5. On the spectrum analyzer to IF section, select the 10 dB/division mode.
6. Set the spectrum analyzer scan width to 20 kHz/division and the bandwith to 3 kHz.
7. Using the display adjustment control, set the unmodulated carrier level to the top line on the display.
8. Apply modulation.
9. Adjust potentiometer R5 on the S-band Exciter (SBE) phase modulator (1A3/1A4-A19R5) for maximum carrier suppression.
10. Measure and record the carrier suppression.
11. Remove modulation.
12. Recall desired preset for low frequency ( ) PSK uplink (2041.9479 MHz).

NOTE

All carrier suppression measurements made in the following steps must be a minimum of 20 dB below the unmodulated carrier.

13. Repeat steps (7), (8), and (10).
14. Remove modulation.
15. Set the NCPS to 32 kb/sec in the SAFE mode.
16. Repeat steps (7), (8), and (10).
17. Remove modulation.
18. Recall desired preset for high frequency ( ) PSK uplink.
19. Repeat steps (7), (8), and (10).

20. Set the NCPS to 216 kb/sec (72-kb/sec encoded) in the SAFE mode.

21. Repeat steps (7), (8), and (10).

22. Recall desired preset for low frequency PSK ( ) uplink.

23. Repeat steps (7), (8), and (10).

24. Replace the primary NCPS with the backup NCPS.

25. Repeat all steps except step (9).

NOTE

All carrier suppression measurements using the backup NCPS must be a minimum of 20 dB below the unmodulated carrier.

c. Modulation Indices Setup Procedure, Mode 25L/25H. For PM, connect an external step attenuator, with 0.1-dB increments, between the verification receiver J6 output and the spectrum analyzer input, and perform the following steps:

1. The recommended step attenuator is a Kay Model 1/439A-01.

2. Recall desired preset ( ) for high frequency PM uplink with frequency offset (launch mode).

3. Turn modulation off.

4. Turn the exciter drive on.

5. Tune the spectrum analyzer to 140 MHz to center the carrier on the display.

6. On the spectrum analyzer IF section, select the 2dB/Div function.

7. Select a scan width of 0.5 MHz/division and a bandwidth of 30 kHz.

8. Set the unmodulated carrier level to a convenient reference level. Make a note of this display reference level.

9. Apply modulation. (Ensure that the RE is only applying 1.7 MHz with no side tones.)

10. Enter all zeros in MIA channels 1, 2, 3, and 5. Increase MIA channel 4 value until 12.3 dB suppression is obtained.

11. Check the 1.7-MHz first sideband levels. The average of the upper and lower sidebands should be 4.8 dB below the modulated carrier, and 7.1 dB below the unmodulated carrier.

NOTE

Due to nonlinearity in the modulator system, the sideband level may not be precisely 4.8 dB below the modulated carrier. If this should occur, readjust the 1.7-MHz subcarrier level as required until the average of the upper and lower sidebands is precisely 4.8 dB below the modulated carrier.

12. Turn the modulation off.
13. Set the spectrum analyzer scan width to 20 dHz/division and the bandwidth to 3 kHz.
14. Insert a total of 21.5 dB in the external attenuator.
15. Using the display adjustment control, set the unmodulated carrier level to a convenient reference level. Make a note of the reference level.
16. Set the NCPS to 216 kb/sec in the SAFE mode.
17. Remove 11.5 dB of attenuation from the external attenuator, leaving a total of 10 dB.
18. Apply modulation.
19. Increase MIA channel 5 value until the carrier level is precisely at the reference level noted in step (18).
20. Reapply 1.7 MHz subcarrier from RE to the exciter at RER switch.
21. Store these values in desired preset.
22. Recall desired preset ( ) for low frequency with offset (launch mode) and repeat steps (3) through (24).
23. Recall desired preset ( ) for high frequency PM link.
24. Repeat steps (3) through (16).
25. Insert a total of 20.0 dB in the external attenuator.
26. Using the display adjustment control, set the unmodulated carrier level to a convenient reference level. Make a note of the reference level.
27. Set the NCPS to 72 kb/sec in the SAFE mode.
28. Remove 10 dB of attenuation from the external attenuator, leaving a total of 10 dB.
29. Apply modulation.
30. Increase MIA channel 5 value until the carrier level is precisely at the same reference level noted in step (29).
31. Reapply 1.7 MHz subcarrier from the RE to the exciter at the RER switch.
32. Store these values in desired preset.
33. Recall desired preset ( ) for low frequency PM uplink and repeat steps (27) through (35).
34. Change the NCPS to 32 kb/sec in the SAFE mode.
35. Measure and record the carrier suppression at 32 kb/sec.
36. Measure and record the total carrier suppression for each data rate (32 kb/sec plus 72 kb/sec) at each of the operating frequencies of 2041.9479 and 2106.4063 MHz.

37. Each of the total carrier suppression measurements must be between 9.4 and 17.4 dB.

38. Record the modulation meter reading. The meter reading may be used for reference only, but should never be used for setting modulation indices.

39. The modulation indices of the 72-kb/sec modulation must be 1.25 radians +10 percent (1.125 to 1.375 radians). The 32-kb/sec modulation indices must be 1.25 radians -10, +12 percent (1.125 to 1.400 radians).

40. Replace the primary NCPS with the backup NCPS.

4.2.4.5 Space Shuttle Verification Receiver Alignment

a. General. This procedure is intended to provide proper command verification and eliminate toggling bit 16 of the Site Status Message (SSM). A wideband phase demodulator has been added.

b. Alignment Procedure.

1. At the exciter interface panel, set up a square-wave generator (at 72 kHz). Apply the output of the generator to J3.

2. Connect a spectrum analyzer to J6 at the rear of the verification receiver to monitor the 140-MHz IF output.

3. At the SBE, select PM, turn modulation to OFF, search to OUT, loop status to LOCK, modulation monitor to EXCITER, and drive to ON.

4. Connect a dc voltmeter to A3TP2 and adjust the PHASE ADJ control for minimum voltage.

4.2.5 Support Configuration

See Figures 1-11 through 1-20 for station configurations.

4.3 Operational Support Procedures

4.3.1 Equipment Prepass Checklist

4.3.1.1 MFR

a. Setup

Unit/Function	Indication/Setting OD DL (Note)	FM DL
1. Frequency	2217.5/2287.5 MHz as required.	2250.0 MHz
2. AGC speed	3.0 msec	Refer to Table 4-5
3. I/F BW	600 kHz	Refer to Table 4-5
4. Video BW	300 kHz	Refer to Table 4-5
5. TLM demod	SYN PM	FM
6. Tuning mode	Auto acq	Fixed
7. Loop BW	1000 Hz (remains at this setting)	NA
8. Coupling	AC	AC
9. Signal-to-Noise Ratio (SNR)	OFF	Refer to Table 4-5
10. Anti-Sideband Lock (ASL)	ON	NA

NOTE

Site will configure, either through the coll tower transponder or zero delay device, to provide valid tracking status for interface testing. Sites will monitor for the alternate PM DL frequency using either an MFR or spectrum analyzer. If a frequency change occurs, change the prime receiver frequency.

b. Backup FM DL MFR. A second MFR will be configured for FM AGC remoting per DL mode 23/TV. This MFR may be used for TV support, or FM autotracking when an FM signal is present. Any FM tracking receiver must be angle-phased in the expected I/F bandwidth and tuning mode (fixed/Automatic Frequency Control [AFC]). AFC is preferred for offset or shifting carriers.

NOTE

Ensure that paragraphs 5.3.8.4.2 and 5.3.8.4.4 of ME-10789 have been performed for optimum FM demodulator performance prior to SRT period.

Table 4-5. MFR Configuration for FM DL - 2250.0 MHz

FM DL Modes	AGC Speed (msec)	IF BW (MHz)	Video BW (MHz)	SNR
02, 03, 04, 05, 06, 07, 08, 09, 12, 13, 14, 15, 16, 17 (SS ops rcdr dump)	30	3	1.5	OFF
22 (Note) 26 (R/T ME data) (DOD data)	30	3	1.5	OFF
23 (TV)	300	10	5	ON
25 (payload digital)				
200 b/sec-1 Mb/sec NRZ-L	30	3	1.5	OFF
200 b/sec-1 Mb/sec BiØ-L	30	3	1.5	OFF
1 Mb/sec-2 Mb/sec NRZ-L	30	6	1.5	ON
1 Mb/sec-2 Mb/sec BiØ-L	30	6	1.5	ON
2 Mb/sec-5 Mb/sec NRZ-L	30	6	3	OFF

NOTE

Refer to the appropriate mission annex for payload requirements.

c. MFR Prepass Checklist (Coded or TDRS Mode). The MFR prepass checklist, when Shuttle is configured coded or TDRS mode, is as follows (frequency is 2287.5/2217.5 MHz):

	Indication/Setting	
Unit/Function	PSK (TDRS) (External Demod)	PSK (TDRS) (Internal Demod) (External Integrator)
1. AGC speed	3 msec	3 msec
2. I/F BW	1.5 MHz	1.5 MHz
3. Video BW	NA	500 kHz
4. TLM demod	NA	FM
5. Tuning Mode	Fixed/AFC	Fixed/AFC
6. Loop BW	NA	NA
7. Coupling	AC	AC
8. SNR	ON	ON
9. ASL	OFF	OFF

d. DFRC Microdyne Receiver Prepass Checklist. This configuration applies to the DFRC Microdyne telemetry acquisition/data receivers only.

	Indication/Setting		
Unit/Function	OD DL TLM (GN Mode)	OD DL TLM (TDRS Mode)	FM DL TLM
1. Frequency	2217.5/2287.5	2217.5/2287.5	2250.0
2. AGC TC	10 Msec	10 Msec	100 Msec
3. I/F BW	750 kHz	3.3 MHz	3.3 MHz
4. Video BW	500 kHz	750 kHz	2.0 MHz
5. TLM Demod	PM DEMOD	PSK DEMOD	FM DEMOD
6. Video Gain	0 dB	0 dB	0 dB
7. Loop BW	1 kHz	3 kHz	N/A
8. Loop Status	Search	Search	N/A
9. Sweep	Enable	Enable	N/A
10. Anti-Sideband	Off	N/A	N/A
11. PM Loop Select	SHORT	SHORT	LONG
12. RCL (Recall)	02 (2217.5 MHz) 01 (2287.5 MHz)	04 (2217.5 MHz) 03 (2287.5 MHz)	05 (2250.0 MHz
13. 2nd LO Mode	XTAL	XTAL	XTAL
14. Video Coupling	AC	AC	AC
15. Demod BW	N/A	N/A	(+,-) 2.5 MHz)

4.3.1.2 Exciter and PA Control

	Unit/Function	Indication/Setting
a.	Exciter frequency (MHz)	2106.4063 or 2041.9479
b.	Loop BW	Wide
c.	Modulation mode	PM (PDL use PSK)
d.	Modulation select ON/OFF	Launch/Ascent ON (MIL/PDL/WPS). For orbital support, OFF during acquisition ON when two-way.
e.	Sweep range	160 kHz
f.	Sweep time	5 secs
g.	Search	OUT (remains in OUT setting)
h.	UL power settings	
	1. 9-meter: (Except WPS) MIL	
	(a) Launch/Landing Support	200 W
	(b) Orbital Support	200 W
	2. 4.3-meter (PDL)	200 W
	3. 7-meter (DFRC)	100 W
	4. 9-meter (WPS)	160 W

4.3.1.3 RER Upgrade Range Equipment (Harris RFC) (MIL Only)

a. RE slave controller - operations page:

Unit/Function	Indication/Setting
1. PRESET	Operator option
2. EQUIP CONFIGURATION	OPERATIONS
3. HEALTH STAT	GREEN
4. SETUP/CONT	A/A
5. MAJOR TONE	500 kHz

b. Setup information:

Unit/Function	Indication/Setting
1. MAJOR RANGE TONE ACQ	FAST (medium for launch/ascent/ landing phase)
2. RATE AID FREQUENCY	2217.5 or 2287.5 MHz
3. DEMOD TYPE	STS
4. DEMOD GAIN	FIXED
5. ZEROSET MODE	Operator option
6. CALIBRATION RANGE	X
7. MINOR RANGE TONE SEQ	AUTO
8. DEMOD PHASING	COMPLETE

NOTE

See Figures 4-1 and 4-2 for typical RER master and slave controller checklist (prepass), and Figure 4-3 for RER controller interface.

4.3.2 Acquisition Sources and Procedures

4.3.2.1 GN

a. The acquisition message to be used as acquisition data for pass support will be identified by Goddard Track.

b. The station will be advised by Goddard Track of any STPS program time bias requirements.

4.3.2.2 Procedures

a. The Space Shuttle onboard RF systems are different from those aboard other spacecraft. KSC is responsible for RF systems maintenance and measurements associated with the Space Shuttle. KSC personnel will report all changes to the RF systems measurements. Support of the Space Shuttle requires acquisition procedures which differ from other spacecraft. However, the ultimate goal remains the same as for other spacecraft, to quickly establish an information link between the supporting element and the spacecraft.

b. Prior to the ground station transmitting an uplink carrier, the SSO transponder is swept over a range of $\pm$ 75 kHz. At this time, the DL carrier frequency is determined by an SSO auxiliary oscillator fixed at the nominal DL frequency. The station receiver sweeps to capture the DL signal.

RNG = NS RESET RF = NOT READY PRESET = 30 HEALTH STAT = GREEN

DOP = .0 HZ SYS DEL = NS SETUP/CONT = M/M

UNIT	CONTR	FREQUENCY	MODE	LOOP	VCO	AGC	LPBW	PRESET	STATUS
MFR	M/M	2287.5	AUTO	UNLK	A	- --	3000	30	ONLINE
MFR	M/M	2287.5	AUTO	UNLK	A	- --	3000	30	OFFLINE
MFR	M/M	2250.0	FIXED	UNLK	0	- --	N/A	52	ONLINE
MFR	M/M	2250.0	FIXED	UNLK	0	- --	N/A	52	OFFLINE
MFR	M/M	2250.0	FIXED	UNLK	0	- --	N/A	51	ONLINE
MFR	M/M	2287.5	AUTO	UNLK	A	- --	3000	31	ONLINE

UNIT	CONTR	FREQUENCY	DRIVE	MODE	SEARCH	OFFSET	PRESET	STATUS
SBE 1	M/M	2106.4063	OFF	OFF	OUT	-----	30	ONLINE
SBE 2	M/M	2106.4063	OFF	OFF	OUT	-----	30	OFFLINE

SBE = 1 DRIVE = OFF MOD = ON SEARCH = OUT OFFSET = + .XXX PRESET = 30

MFR = 1 LOOP = 1 kHz MODE = AUTOACQ PRESET = 30 RSC LINK=ONLINE

RANGE ACQUISITION = RESET PRESET=30 SWITCH MFR=1 SBE=1ONLINE

MC LOG OFF MC OPERATIONS (STATUS)

Figure 4-1. Typical Prepass Checklist (RER) Master Controller (MIL Only)

RE SLAVE CONTROLLER – OPERATIONS

PRESET NUM = 30										EQUIP CONFIG = OPERATIONS	
RNG =		NS RESET		RF = NOT READY						HEALTH STAT = GREEN	
DOP =		.00 HZ INVALID		SYS DEL =			NS			SETUP/CONT = M/M	
MAJOR TONE ---------- MINOR TONES ---------- AGC --											
500	100	20	100	20	4	800	160	40	10	ARC	RTP ---
LOCK VALUE			0	0	0	0	0	0	0	0	STS ---

SET UP INFORMATION

	MAJOR RANGE TONE ACQ FAST/MEDIUM	RATE AID FREQUENCY	2287.5
DEMOD TYPE	STS	DEMOD GAIN	FIXED

ZEROSET MODE	STORED	CALIBRATION RANGE	0xxxx
MINOR RANGE TONE SEQ	AUTO	DEMOD PHASING	COMPLETE
MINOR RANGE TONE SEL	NONE	RANGING ACQUISITION	RESET
LOG	OFF	CORRELATION COMPLETE	NOT CMPL
SIMULATION MODE	NORMAL		

OPERATIONS STATUS

Figure 4-2. Typical Prepass Checklist (RE) Slave Controller (MIL Only)

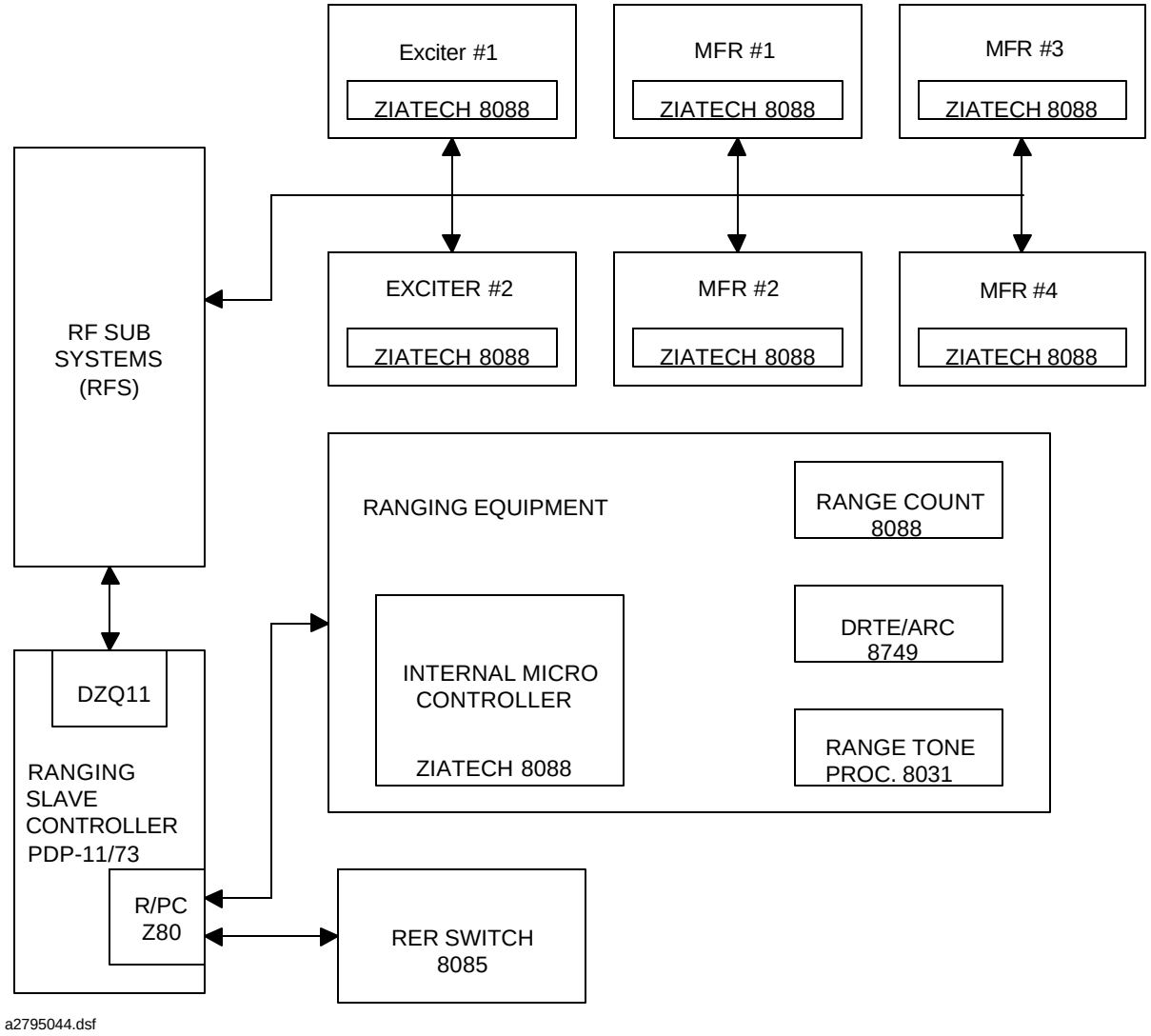

Figure 4-3. MIL RER Slave Controller Interface

c. For throughput operations, the station brings up the transmit carrier at the time Houston CMD has pre-briefed or when clear of transmitter radiate limits at specified mission power. After the transmit carrier is up, the sweeping SSO receiver will lock to the station's transmitted carrier. See Figure 4-4 for a flow chart of RF acquisition procedures.

d. When the SSO transponder receiver acquires the UL signal, the sweep is removed and the SSO receiver begins tracking the carrier. At this time, approximately 0.9 second later, the DL carrier is switched from the auxiliary oscillator to the transponder Voltage-Controlled Oscillator (VCO). The DL frequency then becomes 240/221 (256/205 SGLS) times the UL frequency, plus or minus Doppler. For throughput operations, when Houston CMD announces SSO transponder lock, if Doppler is near expected two-way or 15 seconds have lapsed, apply modulation.

e. Range acquisition should not be initiated by stations with RER upgrade until Space Shuttle demod AGC indicates a good lock level as determined and recorded during the SRT. Acquisition is completed when:

   1. All minor tones are green.

   2. MT LOCK VALUES are all nominal.

   3. CORRELATION COMPLETE indicates "ACQUIRED."

f. STPS operator reports range Delta to OPSR. OPSR makes announcements of "Ranging initiated" and "Range acquisition complete, Delta is (XX) microseconds."

g. If two-way lock is lost (resulting in a false lock condition) and the reason is due to a known UL interruption, such as keyhole, masking, or station equipment malfunction, the OPSR will instruct the exciter operator to perform a reacquisition and immediately inform Houston CMD of action. If two-way lock is lost for a reason not known, inform Houston CMD and wait for direction for removal of UL modulation and reacquisition, as the station may still be able to command. See Figure 4-4 for a flow chart of RTS RF acquisition procedures. See Figure 4-5 for a flow chart of acquisition and reacquisition procedures.

h. For CMD/voice/ranging, initial acquisition procedure for stations with RER upgrade equipment is exactly the same as defined for CMD and voice only. After the station is go for CMD, initiate the ranging sequence. Range is complete when the RCI RFSSC indicates CORRELATION COMPLETE, the MT LOCK VALUES are nominal and do not indicate phase errors and the STPS Cathode Ray Tube (CRT) Range delta (predicted to actual range) is not excessive.

i. Space Shuttle Quad OMNI antenna switching is performed by the General Purpose Computer (GPC) selecting the best antenna for the station in view. Changes in the Space Shuttle GPC automatic antenna selection can be made by commands uplinked by INCO.

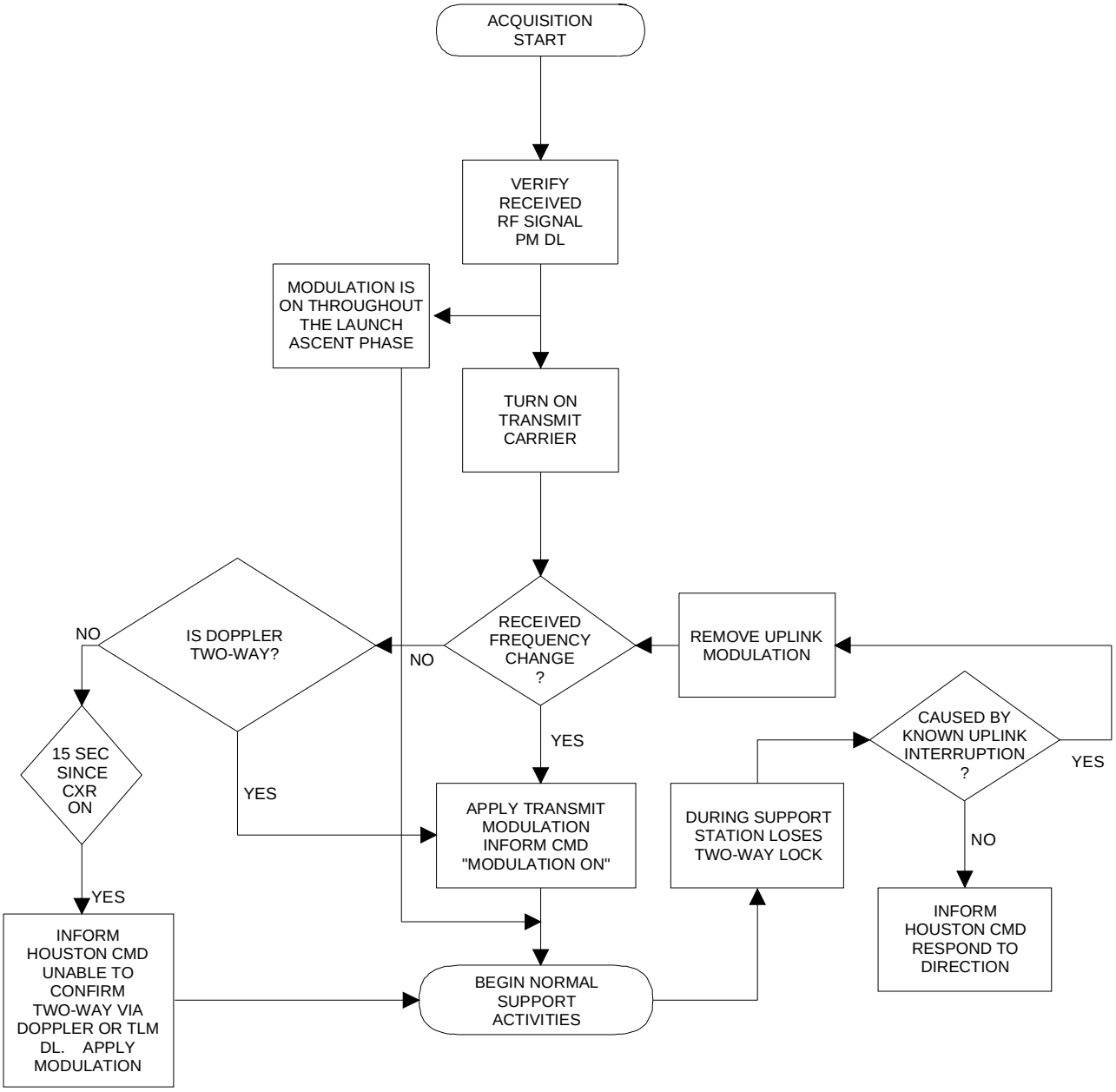

a2795045.dsf

Figure 4-4. RF Acquisition and Reacquisition Throughput Operations

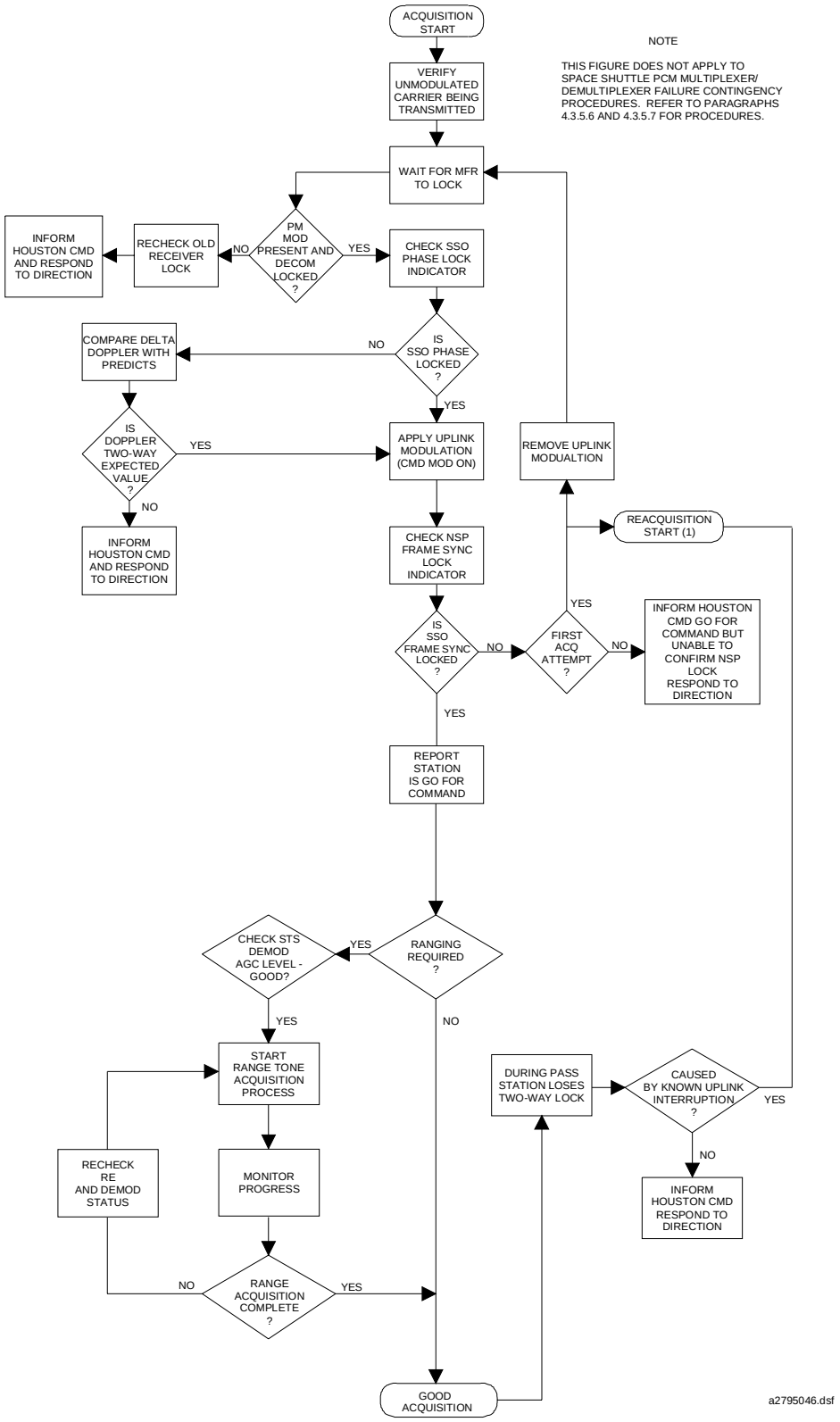

Figure 4-5. Acquisition/Reacquisition Procedure Flow Diagram

4.3.2.3 Station H/O

a. S-band Exciter/MFR

1. Outgoing Station

(a) At H/O time, remove XMTR DRIVE. Reacquire the DL. Continue tracking three-way until LOS.

(b) If receiver lock occurs and DL decom lock does not occur, push PRI LOOP LOCK and MEMORY ERASE pushbutton on MFR to initiate reacquisition.

2. Incoming Station

(a) At predicted AOS, acquire the DL using auto acq tuning modes.

(b) If receiver lock occurs and DL decom lock does not, push PRI LOOP LOCK and MEMORY ERASE pushbutton on MFR to initiate reacquisition.

(c) At H/O time, turn on XMTR DRIVE and initiate two-way acquisition procedures.

b. GN/SN

1. Station to TDRS Support H/O

(a) For backup support to TDRS, the station may FM autotrack the TDRS, PSK DL, 2250-MHz FM DL (when on), or program track as required for best data acquisition. Refer to paragraph 4.3.1.1c for receiver setup.

(b) Prior to H/O, select program mode.

(c) At time of H/O, remove transmitter drive. Reconfigure receiver in accordance with paragraph 4.3.1.1c.

(d) Continue to FM autotrack or program track and transmit tracking data until loss of RF contact.

2. TDRS to Station Support H/O

(a) At predicted horizon or masking exit point, program track and transmit tracking data with a DD router.

(b) Prior to H/O, select program track (if not already selected).

(c) At time of H/O, enable transmitter drive and perform two-way acquisition procedures.

(d) After two-way acquisition is complete, select the OD DL for autotrack. Reconfigure OD DL receivers in accordance with paragraph 4.3.1.1c.

4.3.3 MIL/PDL/WPS Systems Configuration and Operations for Space Shuttle Launch and Ascent

4.3.3.1 Space Shuttle on Launch Pad (Prelaunch)

MIL transmits 200W during prelaunch activities. MIL/PDL/WPS launch/ascent phase exciter frequency offsets are contained in Table 4-6.

4.3.3.2 Space Shuttle Lift-off (Launch)

MIL transmits 200W power at launch. Refer to Table 4-7 for MIL launch phase receiver configuration and Table 4-8 for PDL launch phase receiver configuration.

4.3.3.3 Space Shuttle Ascent

a. For ascent (commencing at liftoff), MIL will configure to support normal (main and acquisition antenna) autotrack.

b. Station personnel may select normal autotrack, or Program Track, as required, for optimum support. In the event of RF signal levels greater than -56 dBm, saturation of the RF front end could occur. MIL is equipped to monitor for and provide nominal track.

c. MIL ascent handover to PDL, and subsequent PDL to MIL handover and MIL to TDRS handover, will normally be scheduled according to the mission ascent profile. In the event of a ground station system failure, contingency action will be taken per procedures delineated in other sections of this NOSP. The handover scenario examples for high-and low- inclination launches are as follows:

1. S-band Handovers:

High Inclination H/O Time	Low Inclination H/O Time	Station
+ 1:00	+ 1:20	MIL/PDL
+ 2:30	+ 2:30	PDL/MIL
+ 7:30	+ 7:30	MIL/TDRS

2. UHF Handovers:

High Inclination H/O Time	Low Inclination H/O Time	Station
+ 00:45	+ 00:45	MIL/PDL
+ 02:15	+ 02:15	PDL/MIL
+ 06:30		MIL/WPS

3. The GC sets the mission specific configuration for MIL and PDL in the launch count. In general, the uplink configuration for MIL is HDR (72 kbps) encrypted with coding on and ranging on. PDL is HDR (72 kbps) encrypted with coding on and ranging off. The downlink configuration is HDR (192 kbps) in the clear with coding off. MIL and PDL will be configured to receive 180 kbps SSME on the FM link.

d. For high-inclination launches, WPS provides 3-way GN support and backup support to TDRSS. WPS can also be utilized for 2-way support in abort situations and contingencies. The uplink configuration will be HDR (72 kbps) encrypted with coding on and ranging off. The downlink configuration is HDR (192 kbps) in the clear with coding off.

Table 4-6. Launch Ascent Exciter Frequency Offsets

	Transponder			**Offsets (3 kHz Error Margin)**	
				28-/57-Deg. Incl.	
	No. 1 (Sweep NG)	**No. 2 (Sweep NG)**	**Average TXPNDR Delay**	**MIL/PDL**	**WPS**
Columbia (OV-102) Hi Freq. Lo Freq.	SN 304 -76/+88 -92/+79	SN 309 -80/+90 -87/+81	983.0 Microsec	+12 kHz	-1 kHz
Discovery (OV-103) Hi Freq. Lo. Freq.	SN 307 -79/+81 -75/+90	SN 306 -76/+89 -76/+88	996.4 Microsec	+20 kHz	-2 kHz
Atlantis (OV-104) Hi Freq. Lo Freq.	SN 310 -92/+75 -90/+78	SN 308 -84/+82 -83/+80	970.2 Microsec	+12 kHz	-1 kHz
Endeavour (OV-105) Hi Freq. Lo Freq.	SN 312 -77/+86 -73/+90	SN 313 -87/+76 -79/+83	921.92 Microsec	+17 kHz	-12 kHz

NOTE

The frequencies and the offsets will also be contained in the launch/ terminal count.

Table 4-7. MIL Launch Phase Receiver Configuration

MFR	Antenna System	Function
A PM OD (2287.5 MHz)	9M Prime	Autotrack, Ranging, and DL OD.
B PM OD (2287.5 MHz)	9M Acquisition	DL OD
C PM OD (2287.5 MHz)	9M Prime	Backup
D FM (2250.0 MHz)	9M Prime	Prime dump or main engine data for PCM and recorders
E FM (2250.0 MHz)	9M Prime	FM AGC remoting and TV
F PM OD (2287.5 MHz)	9M Backup	Backup
G PM OD (2287.5 MHz)	9M Backup	Backup
H		Spare
Note MFRs A through G will be configured for normal combining operation. At station personnel option, MFRs will be selected to provide best autotrack and data quality performance.		

Table 4-8. PDL Launch Phase Receiver Configuration

MFR	Function
A PM OD (2287.5 MHz)	Autotrack and prime OD data
B FM (2250.0 MHz)	Main engine data for PCM and recorders
C PM OD (2287.5 MHz)	Backup
D	Spare

4.3.4 MIL/PDL Configuration and Operations for KSC Landings

a. The supporting station sets transmitter power to 200W for initial acquisition.

b. The station will obtain the predicted landing profile from JSC Track or Navigation, and configure the landing system for optimum uninterrupted support.

c. When the station feels a H/O to the non-prime system will provide the best data, the station will prepare to hand over and will inform JSC when ready to hand over. With JSC concurrence, the station will perform a system-to-system H/O.

d. The initially-selected OD MFR will be switched to the other system as part of any H/O.

e. Configure PDL for landing support and use when necessary.

f. During nominal system 2 landing support, if antenna enters X-axis prelimits, disable X-axis and allow antenna Y-axis to track spacecraft down runway.

4.3.5 Contingency Procedures

NOTE

Contingency procedures are coordinated with and approved by the GC prior to implementation.

4.3.5.1 Loss of Exciter

a. Coordination with GC is not required if exciter fails during AOS period. The station personnel will immediately reconfigure to another exciter. Then notify GC on the SITE COORD.

b. At the failed exciter control panel, perform the following:

   1. Set MODULATION SELECT switch to OFF.

   2. Set XMTR DRIVE switch to OFF.

c. At the Command Switching System (CSS), select the backup exciter.

d. Configure the RE switch to the incoming exciter.

e. At the incoming exciter control panel, perform normal acquisition procedures per Figure 4-5.

NOTE

During ascent and landings, MIL will switch over to the backup system instead of switching to the backup exciter.

4.3.5.2 Loss of Power Amplifier

a. Coordination with GC is not required if PA fails during AOS period. STDN 9-meter stations immediately configure to the 200 Watt power amplifier and notify the GC.

b. Set MODULATION SELECT switch to OFF.

c. Set XMTR DRIVE switch to OFF.

d. STDN 9-meter stations, at the 200 Watt amplifier control panel set the SYSTEM ENABLE switch to the ON position.

e. At the exciter control panel, set XMTR DRIVE switch to ON.

f. See Figure 4-4 for reacquisition procedures.

NOTE

1. Stations with backup PA capability use backup/alternate PA if failure occurs during routine two-way support. If failure occurs during acquisition or critical support, use PA bypass.
2. PA bypass limits stations to 16 W UL power.
3. During ascent and landing, MIL will switch over to the backup system instead of switching to the backup power amplifier.

4.3.5.3 Loss of Autotrack

When the stations experience loss of autotrack, they will select Program mode for tracking. Acquiring the Orbiter via Program mode consists of utilizing either LTAS data or INP data. MIL/PDL and Wallops have designated LTAS data as the primary program mode and INP data as the secondary program mode.

4.3.5.4 Contingency UL Sweep Procedures

a. Set modulation select to OFF.

b. Set search IN/OUT switch to IN.

c. Set sweep range to 180 kHz. For RER upgrade exciter, set sweep range to 160 kHz.

d. Set sweep time to 5 sec.

e. Sweep UL carrier until transponder capture.

f. Verify that EXCITER LOOP STATUS LOCK light is off. VCO TUNING METER should vary with sweep.

g. As exciter sweep approaches center frequency, initiate SEARCH OUT.

h. Check for valid receiver lock (TP lock) and initiate modulation.

4.3.5.5 Space Shuttle Transponder Frequency Switch (Low Frequency to High Frequency or High Frequency to Low Frequency)

a. GC, or Houston CMD will brief station as to time of transponder select, CMD transmission, and if possible, give the station a verbal countdown to CMD transmission.

NOTE

1. It is not known when this condition may occur or if advance notification can be provided by GC or Houston CMD.
2. Station reconfiguration time required to complete this procedure is approximately 30 to 60 seconds.
3. Low-high frequencies:

Frequency Mode	DL	Carrier UL
Low	2217.5 MHz	2041.9479 MHz
High	2287.5 MHz	2106.4063 MHz

b. Prior to the transponder frequency switch, the Antenna Control Console (ACC) operator shall ensure that the program angles have been updated to correspond with those generated by autotrack. At time of Command transmission, the ACC operator selects PROGRAM mode.

c. Prior to and following the command for transponder frequency switch and verification, the station concurrently performs the following procedures. Stations should monitor the receiver input RF DL spectrum with a spectrum analyzer to expedite the reconfiguration in case a contingency frequency change is made. Figures 4-6 through 4-8 contain receiver and data group configuration diagrams.

1. Receiver reconfigurations:
   (a) Prior to transponder frequency switch, configure the backup OD DL receiver to the alternate frequency.
   (b) When the backup receiver acquires the alternate frequency the telemetry processor source is switched to the backup OD data group.
   (c) Reconfigure the prime OD DL receiver to the alternate frequency.
2. For the power amplifier/exciter/ranging: At ranging equipment, select alternate frequency for rate aid. Perform a normal range acquisition.
3. Following the transponder switch, the ACC operator monitors the STPS CRT and OPERATIONS loop for two-way reacquisition. After reacquisition, the ACC continues normally.

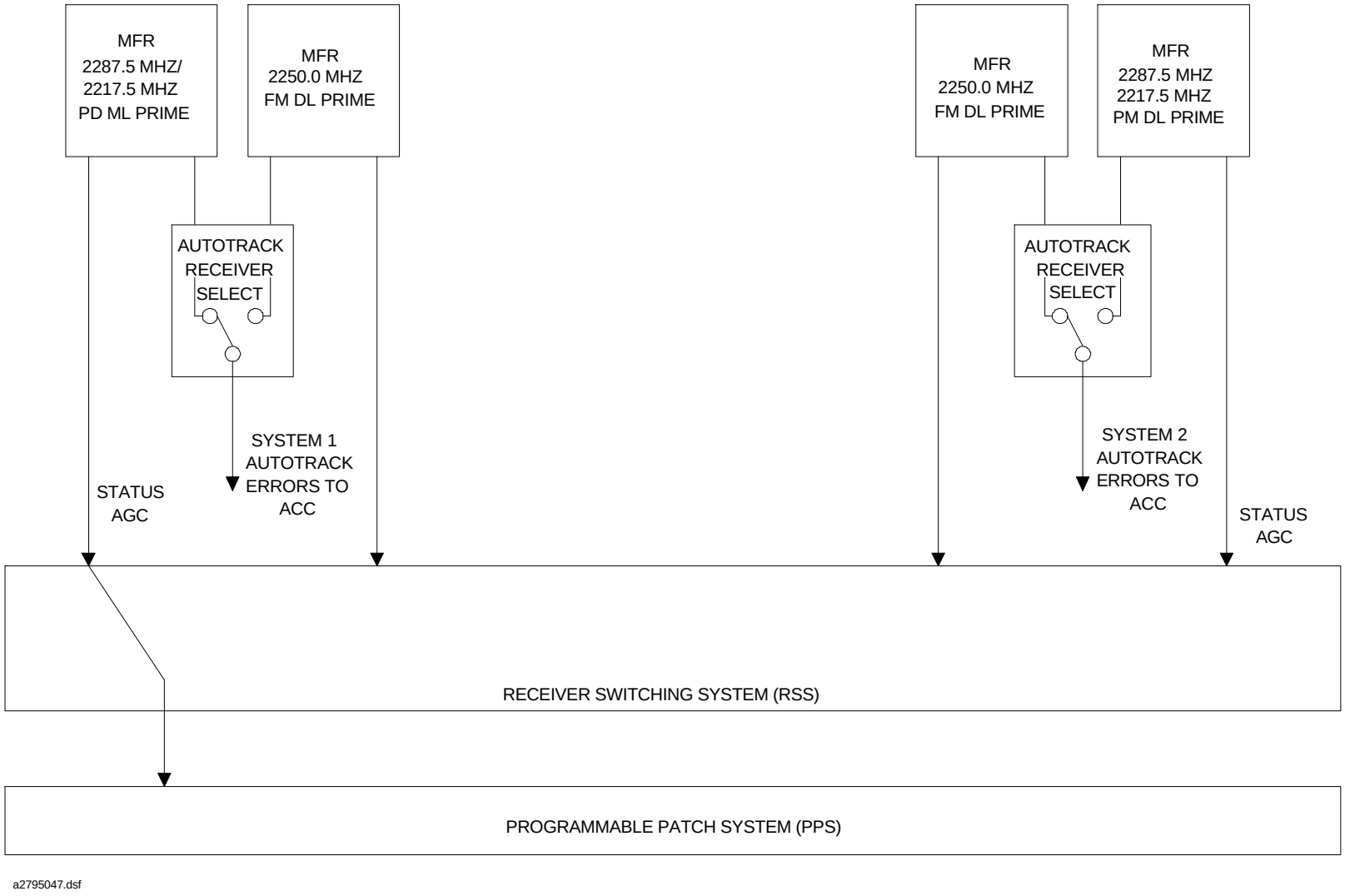

Figure 4-6. Suggested GN S-band Receiver Configuration (Prior to Frequency Switch)

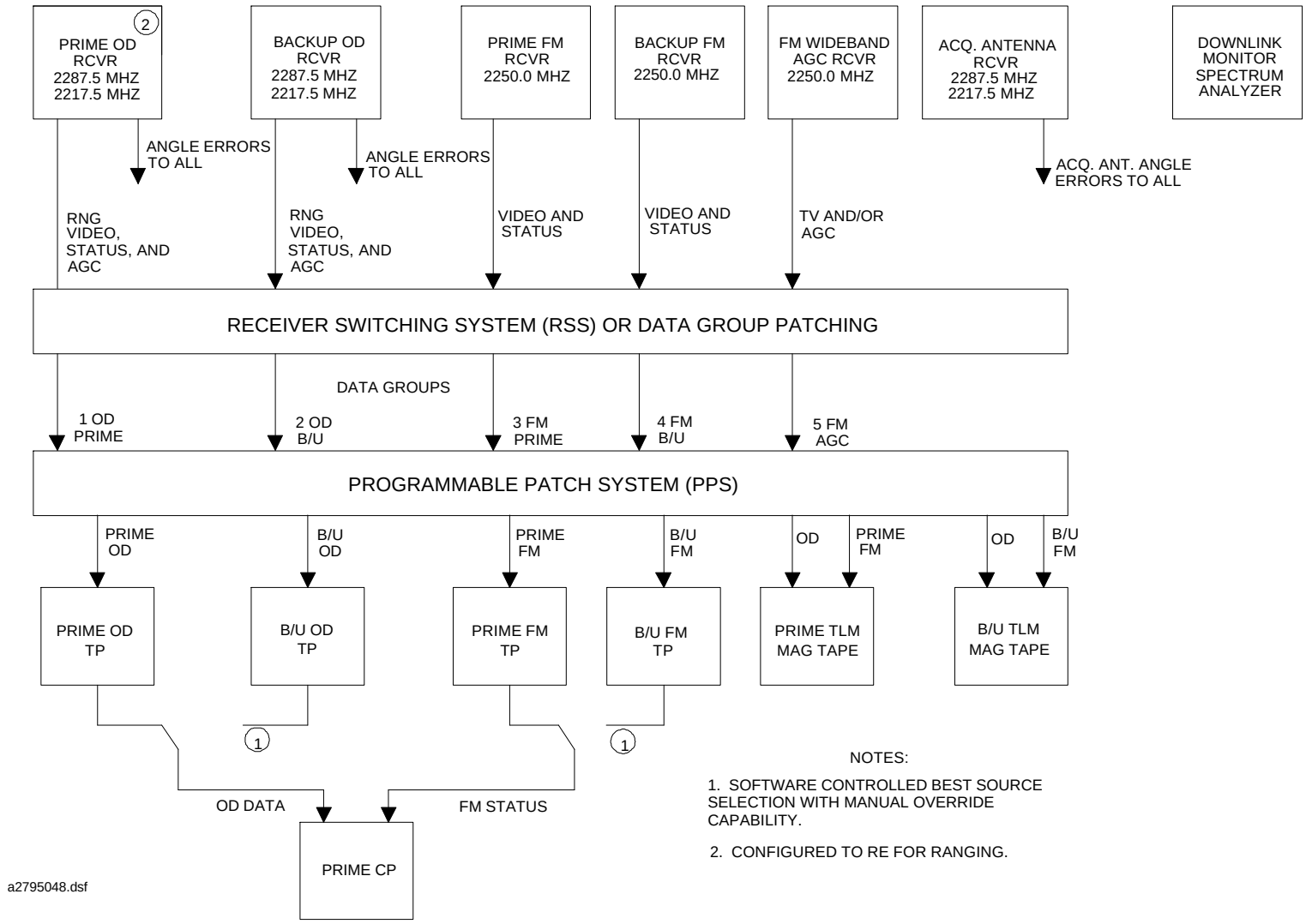

Figure 4-7. Suggested GN S-band Receiver Configuration (RER Systems)

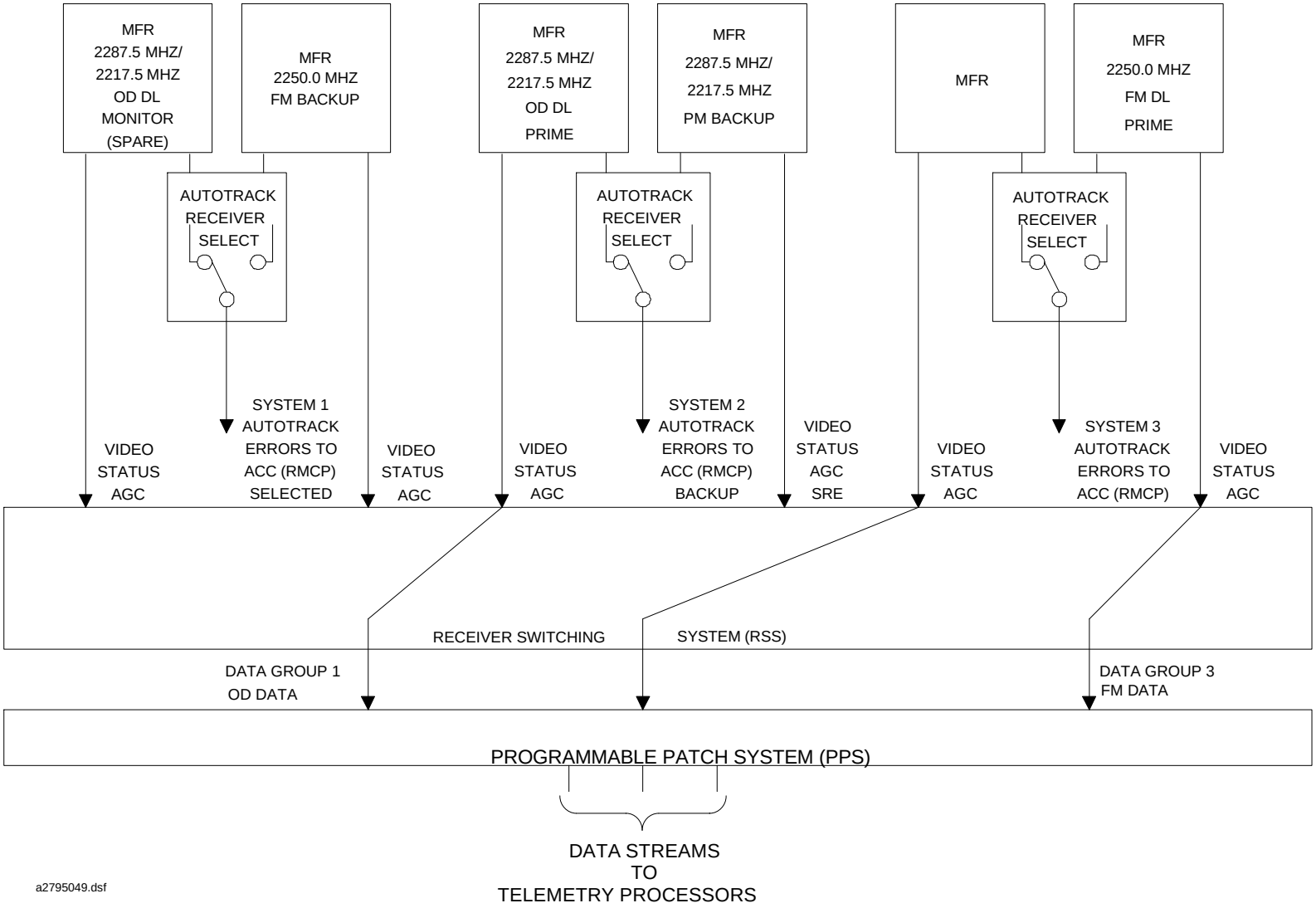

Figure 4-8. Suggested GN S-band Receiver Configuration (After Frequency Switch)

4.3.5.6 Loss of PCM Decom/Transponder/NSP Lock Select Box

a. During initial acquisition/reacquisition/handover, uplink an unmodulated carrier. Verify receiver lock.

b. STPS/ACC operator monitors the CRT Doppler real/predicted Delta.

c. If the Doppler value is the expected two-way value, inform the GC and request S/C transponder NSP lock verification.

d. If Doppler Delta is not the expected value, inform the GC and respond to direction.

4.3.5.7 Exciter to Exciter H/O (Station Contingency Command Link H/O)

This procedure applies to stations with two or more GN exciters, and is to be used for cause unknown command link failure. Houston CMD coordinates the H/O with the station personnel. Refer to Table 4-6.

a. At the outgoing exciter control panel, perform the following:

   1. Set the MODULATION SELECT switch to OFF.

   2. At the CSS, select modulation to the incoming exciter.

b. At the incoming exciter control panel, set the XMTR DRIVE switch to ON.

c. At the outgoing exciter control panel, perform the following:

   1. Set the XMTR DRIVE switch to OFF.

   2. Verify SSO is in phase lock.

d. At the incoming exciter control panel, perform the following:

   1. Set the MODULATION SELECT switch to ON.

   2. Verify SSO NSP frame sync lock.

e. Announce "Go for command."

f. At RE switch, select incoming exciter.

g. Initiate normal range acquisition procedures.

4.4 Modulation on Technique Acquisition Sources and Procedures (MIL, PDL, and WPS)

4.4.1 Sources

LTAS is the prime acquisition source for all launches. INPs and slave sources are backup. Station personnel may use the best acquisition source for reacquisition.

4.4.2 Procedures

4.4.2.1 General

a. Background

1. The characteristics of the transponder on the SSO dictate acquisition procedures which differ from other missions. The ultimate goal of a reliable and quickly established information link between the vehicle and the ground station remains unchanged.

2. Early testing of the SSO transponder demonstrated that the SSO receiver would erroneously lock (false-lock) to any one of numerous data frequency components rather than properly locking to the carrier frequency.

3. The false-lock problem can be virtually eliminated for critical mission phases by:

   (a) Convolutionally encoding (1/3 rate) the 72-kb/sec HDR Time-Division Multiplexing (TDM) signal. Randomize UL voice channels by encryption.

   (b) Offsetting UL transmitter center frequency for Doppler shift. The exciter frequency offset will be furnished in each mission's launch count.

4. In the event that the above items cannot be provided, the stations should use MOD OFF acquisition techniques. Refer to paragraph 4.3.2.

5. In event of contingency, MCC may direct the station to immediately reconfigure to mode 24H or 25H vice 24K/25K. In the event this occurs, procedures in paragraph 4.3.2 apply (Mod OFF acq).

b. Utilization

1. During acquisition/reacquisition, the ground station transmits a modulated carrier (UL mode 24K or 25K, exciter search out and loop status lock indicator lit) while the receiver in the SSO transponder is swept over a range of +75 kHz. At this time, the DL carrier frequency is determined by an SSO auxiliary oscillator fixed at the nominal DL frequency. The station receiver sweeps to capture the DL signal.

2. When the SSO transponder receiver acquires the UL signal, the sweep is removed and the SSO receiver begins tracking the carrier. At this time, approximately 0.9 seconds later, the DL carrier is switched from the auxiliary oscillator to the transponder VCO. The DL frequency then becomes 240/221 times the UL frequency, plus or minus Doppler.

3. Before the UL signal is captured by the transponder receiver, the DL is the nominal frequency, plus or minus one-way Doppler. After capture, the DL contains the two-way Doppler shift. If the station receiver is initially locked to the auxiliary oscillator, the frequency transient that occurs when the DL is switched to the transponder VCO probably causes loss of receiver lock. The station receiver sweep automatically resumes to acquire the coherent DL.

4. Once the station receiver has acquired the coherent DL, the hands-off acquisition is complete.

5. Ground station operators must be alert for false locks in case of momentary UL (SSO) or DL (MFR) loss-of-lock. Upon loss-of-lock, the SSO receiver immediately begins trying to acquire the UL. If the UL transmitter has been properly offset to compensate for the Doppler shift, the SSO receiver acquires the modulated UL carrier. If loss- of-lock occurs at a point where Doppler contraints cause false-lock on the + 108 kHz data components, the operator must be prepared to use reacquisition techniques whereby false-lock is recognized and modulation is removed. Reacquisition techniques that use carrier only are used for MIL/PDL on ascent phase when two-way Doppler exceeds -63 kHz.

6. During an RTLS abort, the SSO transponder is susceptible to false locks from MIL/PDL from approximately SSO turnaround (transition from negative to positive Doppler) until landing. If reacquisition is required after that point, modulation off reacquisition techniques should be performed.

7. The exciter offset plus/minus kHz is applicable when either the 2041.9479- or 2106.4063-MHz is used for launch. The fixed amount of offset remains constant throughout the pass. Stations are required to verify transmit frequency prelaunch.

4.4.2.2 Two-way Acquisition Procedures (SBE MFR)

a. On the SBE, turn modulation on.

b. Unless otherwise instructed, at H/O turn transmitter drive to on.

c. On the MFR, select AUTO acq or MANUAL acq tuning mode, as applicable, to initiate receiver VCO sweep.

NOTE

Care must be taken to ensure that MFR VCO does not drift from the preset centerpoint prior to AOS. This may occur due to noise on the DL spectrum causing momentary lock indications and resulting MFR memory activity. If a significant drift in MFR center frequency is noted prior to expected AOS, reset the MFR memory by pressing the memory switch/indicator.

d. After AOS, valid ground station lock, the exciter operator verifies SSO lock, NSP lock, and decom lock. The station controller then announces "Go for command." (NSP lock not applicable to asynchronous throughput missions.)

e. After the station is "Go for Command," and the RE STS DEMOD AGC indicates lock, initiate and report start of ranging sequence. As soon as range acquisition is complete (Operations Page indicating all tones GREEN "Range Acquired") report range acquired and the range DELTA in microseconds.

f. If valid lock is lost for any reason, reacquisition takes place automatically. As soon as the exciter operator notices that any of the indicators on the NSP panel are red, he presses the "C" clear button and ensures that the green portion of all three indicators is lit and no red portions are lit. If a comparison of measured and expected Doppler at the STPS indicates a large difference, the operator must report the difference and be prepared to use reacquisition techniques whereby modulation is removed.

NOTE

Upon an initial MOD ON acquisition, the Exciter Operator should switch MOD OFF. If after 8 seconds, a large Doppler difference still exists, Exciter Operator reapply MOD and station OPS notify and coordinate with Houston CMD.

g. In the event of valid loss-of-lock and subsequent reacquisition, reinitiate ranging.

h. Verify that ranging is valid and that tracking data transmission is in progress.

4.4.2.3 Station H/O

Station H/O procedures are per paragraph 4.3.2.3.

4.5 Tracking System Requirements (S-band Tracking Processor System)

4.5.1 Real-time Support

a. MIL will use the latest authorized version of the tracking Software Support Instruction (SSI) for the Multibus M130 Computer (STPS System). During the launch phase, the MIL STPS is used to simultaneously provide AZ-EL pointing data to the PDL antenna system.

b. Configure the STPS as follows:

Unit/Function	Explanation/Function
1. Program Mode	Online/Real-time
2. SIC/VID	2XXX/5
3. CRT summary	ON at AOS minus 2 minutes; OFF at LOS plus 1 minute
4. Log:	
(a) MIL Launch Phase	ON (maximum rate) at Lift-off only minus 9 minutes; Off at LOS plus 2 minutes
(b) All other support	ON (maximum rate) at AOS minus 2 minutes; OFF at LOS plus 1 minute

5. Acquisition Data Source:	
(a) MIL and PDL Launch Phase Only	LTAS prime; prelaunch nominal INP secondary
(b) All stations orbital support	Latest IIRV or INP as directed by Goddard Track
6. Low-speed Tracking Data:	
(a) MIL Launch Phase only.	ON (1 sample/10 seconds) at lift-off minus 9 minutes; OFF at LOS plus 2 minutes
(b) All other support	ON (1 sample/10 seconds) at AOS minus 2 minutes; OFF at LOS plus 1 minute
7. Low-speed Tracking Data Router (TDR)	JJ during orbital support (GSTDN mode) 2-way; DD during orbital support (GSTDN mode) 3-way; DD during launch/landing support
8. MDDF Tracking Data:	
(a) MIL	ON at liftoff minus 9 minutes; OFF at LOS plus 2 minutes.
(b) MIL reentry and landing phase	ON at AOS minus 2 minutes; OFF at LOS plus 2 minutes, or as only otherwise directed by DFE.
9. UTDF High-speed Tracking Data:	The data will be configured from the STPS to wide band line.
(a) MIL	ON at liftoff minus 9 minutes; OFF at LOS plus 2 minutes.
(b) MIL reentry and landing phase only	ON at AOS minus 2 minutes; OFF at LOS plus 2 minutes, or as otherwise directed by DFE.
10. High-speed Tracking Data (UTDF) Destination Code (HSR)	245(8) - Unless otherwise specified, refer to Table 4-9 for high-speed tracking data destination codes.
11. MIL to PDL Pointing	PDL ON at liftoff minus 5 minutes; PDL OFF at PDL LOS plus 2 minutes.

4.5.2 Playback Support

a. Tracking data playbacks from the log tape are normally made using the latest version of software authorized by the tracking SSI.

b. Support requirements will be determined by DFE or Goddard Track.

Table 4-9. High-speed Tracking Data Octal Destination Codes

Code	Destination
020_8	GSFC/FDF
150_8	JSC (via both 840-kb/sec circuits)
160_8	JSC (via both 840-kb/sec circuits)
245_8	JSC/FDF (JSC via 840-kb/sec circuits)

Section 5. Station Computer Systems

5.1 Required Documentation

Station Local Operating Procedures (LOPs) and this NOSP are used to configure and operate STDN station computer systems in support of the Space Shuttle missions. MIL will also use Network Operations Procedures for Secure Systems, Security Local Operating Procedures for the MIL STDN Station, and the MIL Space Shuttle Mission Support Procedure MIL-MSP-001.

5.2 Remote Site Data Processor Requirements

5.2.1 Telemetry Processing - PM Operational DL

a. The OD DL from the spacecraft is transferred to the RSDP system in a synchronous or asynchronous throughput mode. The RSDP system is capable of transmitting 192- or 96-kb/sec data with voice, or 128- or 64-kb/sec data without voice.

b. The computer packs the data into 4800-bit blocks for real-time transmission. See Figure 5-1 for the HSD block format.

c. Space Shuttle-unique message type codes define the type of data packed into the 4800-bit blocks. This octal code is located in byte 9 of the user header. Refer to Table 5-1 for the message type codes.

d. The OD data HSD block is time-tagged with the GMT corresponding to the first bit of OD data in the HSD block.

e. Onstation recorded OD real-time data is transmitted postpass if requested by JSC. Playback is made in the forward data direction at a 1:1 rate (same as record rate). Tape time from the Time Code Translator (TCT) is used to time-tag all real-time playbacks.

5.2.2 FM Operational DL Support Requirements

Status information for the onboard tape recorder dumps of OD PCM TLM data, and OD voice and TLM data are input to the RSDP system (except DFRC) in real time for transmission to JSC/NCC.

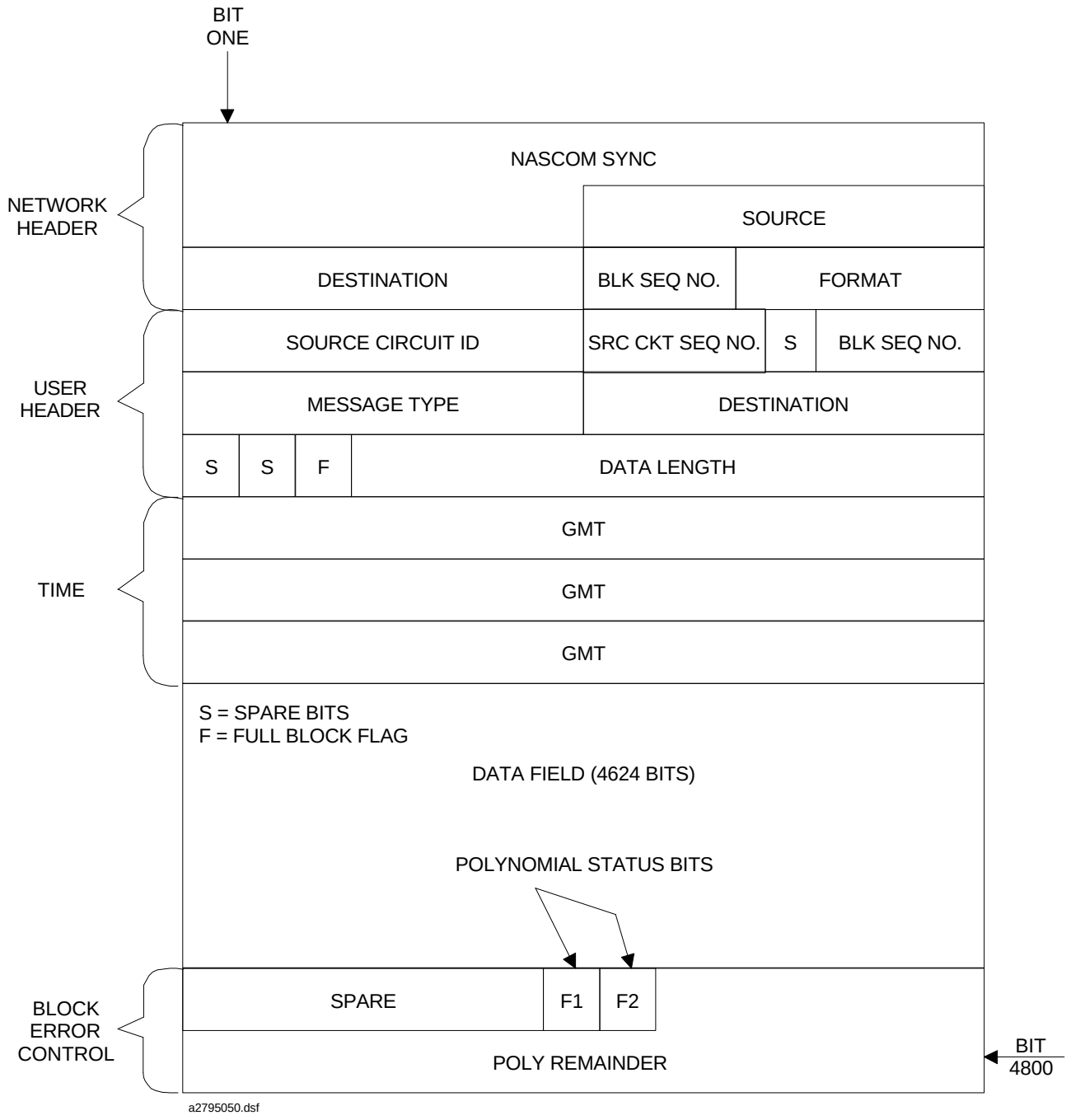

Figure 5-1. GSFC to JSC NISN Block

Table 5-1. Message Type Codes

Message Type	Octal Code
Command History Type III/Echoes	030
Uplink Test CMD	226
Payload	240
TLM OD Real-time	241
TLM OD Playback	242
TLM FM Dump Playback	243
Site Status Message (SSM)	244
JSC real-time OD data/JSC FWD CMD Stream	023

5.2.3 MIL Site Status Message

The SSM contains the following information:

a. CMD configuration and status.

b. DL signal strength.

c. Dump data characteristics.

d. BSS configuration.

e. Telemetry parameters and validity data.

f. Site equipment status data.

g. Shuttle Launch Support System (SLSS) status.

h. Receiver lock status.

5.2.4 Remote Control Interface (MIL/PDL)

5.2.4.1

The purpose of the RCI is to provide remote control of all MIL and PDL station subsystem controllers from a consolidated location, that location being a Monitor and Control Subsystem (MCS) workstation. The RCI provides a high-level control and status capability not available at the individual subsystem controllers because it can combine system-wide information. For reliability and usability, multiple MCS workstations can be operated simultaneously, allowing concurrent tasks to be performed and minimizing the impact of a failed MCS workstation.

5.2.4.2

Unlike the other station subsystems, which each directly controls their respective equipment, the MCS workstation is essentially a subsystem controller that in turn controls the equipment subsystem controllers.

5.3 NISN Blocker/Deblocker (MIL/PDL only)

5.3.1 General

a. The NBD unit provides the ability to source or sink data in the 4800 bit Blocked Data Format (BDF). The general format of the NISN 4800-bit block is shown in Figure 5-1.

b. MIL has 6 blocker/deblocker units with 2 channels each for a total of 12 channels. PDL has 2 blocker/deblocker units with 2 channels each for a total of 4 channels. Any channel can block or deblock per operator setup.

c. The NBD is controlled by the Communications Processor Subsystem (CPX). The CPX along with its Subsystem Controller (SSC) allows the operator to configure and monitor the NBD.

5.3.2 Blocker

a. In the blocker mode, the unit accepts telemetry data for blocking into 4800-bit blocks that include time and user defined header information fields. A full featured frame synchronizer provides the ability to block satellite data, tracking data, command data, and Consultative Committee for Space Data Systems (CCSDS) transfer frames in addition to traditional telemetry frames.

b. Blockers 3 and 4 at MIL are assigned to process PDL data. They are used to block the 192kb because the blocked rate is too high for PDL to transmit over their assigned T1 Multiplexer (MUX) channel.

c. PDL uses 3 of their blocker channels to block the SSME data. The fourth channel is a spare.

5.3.3 Deblocker

As a deblocker, the unit accepts 4800-bit blocks in a variety of formats, selectively filters the blocks based on header field contents, and extracts the active embedded data. The data is then output to the DCS for transmission to the end user.

5.4 MIL Blocker/Deblocker Setup Files for Launch

The following is a list of the blocker/deblocker channel assignments (column 1) plus the file name (column 2). The file contains the parameters needed to be loaded into the blocker or deblocker for the type of data listed in column 3.

a. Blockers:

1.	NBD1_CHA	with	MILASTSBLKS	MIL OD PR
2.	NBD2_CHA	with	MILASTSBLKS	MIL OD B/U
3.	NBD3_CHA	with	PDLSTSBLKS	PDL OD PR
4.	NBD4_CHA	with	PDLSTSBLKS	PDL OD B/U
5.	NBD5_CHA	with	PDLSTSBLKS	JPL DATA
6.	NBD6_CHA	with	MILASTSBLKS	WPS DATA

b. Deblockers:

1.	NBD1_CHB	with	STS SKR DBLK
2.	NBD2_CHB		
3.	NBD3_CHB	with	STS WPS DBLK
4.	NBD4_CHB		
5.	NBD5_CHB	with	FM OD DEBLK
6.	NBD6_CHB	with	SSME DEBLK

5.5 MIL Blocker/Deblocker Setup Parameters for Launch

a.	MILASTSBLKS	Source Code	=	001	Block Type	=	Shuttle
		Destination Code	=	273	Fill Block	=	Partial Data
		Format Code	=	021	Insert Mode	=	TPUT
		Message Type	=	241	Time	=	Realtime
		Source Circuit ID	=	004	Input Code	=	NRZ-L
					Output Code	=	NRZ-L
b.	PDLSTSBLKS	Source Code	=	122	Block Type	=	Shuttle
		Destination Code	=	160	Fill Block	=	Partial Data
		Format Code	=	021	Insert Mode	=	TPUT
		Message Type	=	241	Time	=	Realtime
		Source Cirucit ID	=	110	Input Code	=	NRZ-L
					Output Code	=	NRZ-L

c.	STS FM PB	Source Code	=	001	Block Type	=	Shuttle
		Destination Code	=	160	Fill Block	=	Partial Data
		Format Code	=	021	Insert Mode	=	TPUT
		Message Type	=	243	Time	=	Realtime
		Source Circuit ID	=	004	Input Code	=	NRZ-L
					Output Code	=	NRZ-L
d.	SSME PB	Source Code	=	001	Block Type	=	Shuttle
		Destination Code	=	160	Fill Block	=	Partial Data
		Format Code	=	021	Insert Mode	=	TPUT
		Message Type	=	243	Time	=	Realtime
		Source Circuit ID	=	004	Input Code	=	NRZ-L
					Output Code	=	NRZ-L
e.	STS OD PB	Source Code	=	001	Block Type	=	Shuttle
		Destination Code	=	160	Fill Block	=	Partial Data
		Format Code	=	021	Insert Mode	=	TPUT
		Message Type	=	242	Time	=	Tape Time
		Source Circuit ID	=	004	Input Code	=	NRZ-L
					Output Code	=	NRZ-L
f.	STS CMD PB	Source Code	=	001	Block Type	=	Shuttle
		Destination Code	=	021	Fill Block	=	Partial Data
		Message Type	=	030	Insert Mode	=	TPUT
		Source Circuit ID	=	004	Time	=	Tape Time
					Input Code	=	NRZ-L
					Output Code	=	NRZ-L
g.	STS SKR DEBLK	MSG Type	=	023	Message Type	=	Checked
					Block Type	=	Shuttle
					Input Code	=	NRZ-L
					Output Code	=	NRZ-L
					Polly Errors	=	Reject
					Output Mode	=	Continuous
					Output Bit Rate	=	192000
					Tracking	=	Checked
h.	STS WPS DEBLK	MSG Type	=	241	Message Type	=	Checked
					Block Type	=	Shuttle
					Input Code	=	NRZ-L
					Output Code	=	NRZ-L
					Polly Errors	=	Reject
					Output Mode	=	Continuous
					Output Bit Rate	=	192000
					Tracking	=	Checked

i.	FM OD DEBLK	MSG Type	=	None	Message Type	=	Checked
					Block Type	=	Shuttle
					Input Code	=	NRZ-L
					Output Code	=	NRZ-L
					Polly Errors	=	Reject
					Output Mode	=	Continuous
					Output Bit Rate	=	1024000
					Tracking	=	Checked
j.	SSME DEBLK	MSG Type	=	None	Message Type	=	Not Checked
					Block Type	=	Shuttle
					Input Code	=	NRZ-L
					Output Code	=	NRZ-L
					Polly Errors	=	Reject
					Output Mode	=	Continuous
					Output Bit Rate	=	960000
					Tracking	=	Checked

5.6 PDL Blocker/Deblocker Setup Files for Launch

The blockers at PDL are used only for blocking the three SSME data streams for transmission to MIL:

a. NBD1_CHA with ME-1-STS

b. NBD1_CHB with ME-2-STS

c. NBD2_CHA with ME-3-STS

5.7 MIL Orbit Configuration Setup Files

a. Blockers when only one system is used:

1. NBD1_CHA with MILASTSBLKS
2. NBD2_CHA with MILASTSBLKS
3. NBD3_CHA with STS FM PB
4. NBD4_CHA with STS FM PB
5. NBD5_CHA with STS FM PB
6. NBD6_CHA

b. Blockers when two systems are used:

1. NBD1_CHA with MILASTSBLKS
2. NBD2_CHA with MILASTSBLKS
3. NBD3_CHA with PDLSTSBLKS
4. NBD4_CHA with PDLSTSBLKS
5. NBD5_CHA with STS FM PB
6. NBD6_CHA with STS FM PB

c. Deblockers:

1. NBD1_CHB with STS SKR DBLK
2. NBD2_CHB
3. NBD3_CHB with STS SKR DBLK
4. NBD4_CHB with FM DEBLK 960
5. NBD5_CHB with FM DEBLK 1024
6. NBD6_CHB with SSME DBLK

5.8 Blockers/Deblockers for MIL and PDL

The following is a list of blocker/deblocker assignments. The second column is a list of the devices providing the data to the blocker/deblocker. The third column is a list of data types by name.

Channel	Input	Data Description
NBD1_CHA_IN	BSS_5_SW_OUT/DCX2_BS-5	192 kb/sec OD MIL Prime SYS-2
NBD2_CHA_IN	BSS_6_SW_OUT/DCX3_BS-5	192 kb/sec OD MIL B/U SYS-1
NBD3_CHA_IN	BSS_7_SW_OUT/DCX1_BS-5	192 kb/sec OD PR PDL Line SYS-1
NBD4_CHA_IN	BSS_7_SW_OUT/DCX3_BS-4	192 kb/sec OD B/U PDL Line SYS-2
NBD5_CHA_IN	DCX1_BS-2	960 kb/sec Dump
NBD6_CHA_IN	DCX1_BS-3	1024 kb/sec Dump
NBD1_CHB_IN	GKSC_62259_RX	JSC OD Data
NBD2_CHB_IN		
NBD3_CHB_IN	GKSC_62259_RX	JSC OD Data
NBD4_CHB_IN	GKSC_05963_RX	960 kb/sec FM OD to RPS
NBD5_CHB_IN	GKSC_05963_RX	1024 kb/sec FM OD to RPS
NBD6_CHB_IN	GKSC_05963_RX	960 kb/sec SSME to RPS

5.9 MIL Multiplexer

The Model 3302 NISN block multiplexer is a 5-channel multiplexer dedicated specifically to multiplexing of NISN block signals. It accepts 4800-bit NISN blocks from up to five sources and multiplexes them into a single output stream. The unit is comprised of three elements: an input channel controller - one per each input channel, the output multiplexer, and a microprocessor unit controller. All control is accomplished using front panel controls or an RS-232 interface for computer control.

Table 5-2. MIL MUX Configuration for Launch

Mux #1	Data Type	Switch Port Name
CH 1	192 kb/sec Prime OD	NBD2_CHA_OUT
CH 2	192 kb/sec B/U OD	NBD4_CHA_OUT
CH 3	MIL CMD Echo and Status B/U	NCPS2_OUT
CH 4	Unassigned	
CH 5	MIL CMD Echo and Status	NCPS1_OUT
MUX #2	**Data Type**	**Switch Port Name**
CH 1	PDL 192 kb/sec Prime OD	NBD3_CHA_OUT
CH 2	PDL 192 kb/sec B/U OD	NBD4_CHB_OUT
CH 3	WPS 192 kb/sec OD	NBD6_CHA_OUT
CH 4	JDI 192 kb/sec OD	NBD5_CHA_OUT
CH 5	PDL CMD Echo and Status	PDL_NCPS_OUT

Table 5-3. PDL MUX Configuration for Launch

Mux #1	Data Type	Switch Port Name
CH 1	SSME #1 60 kb/sec	NBD1_CHA_OUT
CH 2	SSME #2 60 kb/sec	NBD1_CHB_OUT
CH 3	SSME #3 60 kb/sec	NBD2_CHA_OUT
CH 4		
CH 5		

Table 5-4. MIL MUX Configuration for Orbit Support

Single Antenna System Configuration

Mux #1	Data Type	Switch Type Name
CH 1	192 kb/sec OD Prime	NBD1_CHA_OUT
CH 2	192 kb/sec B/U	NBD2_CHA_OUT
CH 3	OD, CMD or Reduced FM PB	NBD5_CHA_OUT
CH 4	Unassigned	
CH 5	CMD Echo and Status	NCPS1_OUT
MUX #2	**Data Type**	**Switch Type Name**
CH 1	960 kb/sec FM Dump	NBD3_CHA_OUT
CH 2	1024 kb/sec FM Dump	NBD4_CHA_OUT
CH 3	Unassigned	
CH 4	Unassigned	
CH 5	Unassigned	

Dual Antenna System Configuration

Mux #1	Data Type	Switch Type Name
CH 1	192 kb/sec OD MIL Prime SYS 2	NBD1_CHA_OUT
CH 2	192 kb/sec OD MIL Backup SYS 2	NBD2_CHA_OUT
CH 3	Unassigned	
CH 4	Unassigned	
CH 5	MIL CMD Echo and Status	NCPS1_OUT
MUX #2	**Data Type**	**Switch Type Name**
CH 1	192 kb/sec OD SYS 1 (PDL Prime Line)	NBD3_CHA_OUT
CH 2	192 kb/sec OD SYS 1 (PDL Backup Line)	NBD4_CHA_OUT
CH 3	Unassigned	
CH 4	Unassigned	
CH 5	B/U MIL CMD Echo and Status	NCPS2_OUT

NOTE

In Dual configuration, the FM Dump Blocker is connected directly to the KSC_05963_TX line (bypassing the MUX).

Table 5-5. Demux Settings to Demux PDL Main Engine Data

	Channel 1	Channel 2	Channel 3
Unit Ops	Deblock	Deblock	Deblock
Synth Freq	60000 (Set)	60000 (Set)	60000 (Set)
Output Clk Source	Internal	Internal	Internal
Interblock Idle Pat.	All 1s (One)	All 1s (One)	All 1s (One)
Frmt Select	STS-TPUT	STS-TPUT	STS-TPUT
Base	OCT	OCT	OCT
SCR Code	000	000	000
Mask:	000	000	000
Dest. Code:	000	000	000
Mask:	000	000	000
SCID:	000	000	000
Mask:	000	000	000
DSID:	000	000	000
Mask:	000	000	000
Msg Type:	105 (checked)	106 (checked)	107 (checked)
Mask:	377	377	377
Block Counter:	000	000	000
Mask:	000	000	000
MSG Type is checked on RCI or SSC.			

Table 5-6. Demux Channel Assignments and Parameters

Demux 1

CH 1	PDL SSME 1	MUX2_FROM_PDL
CH 2	PDL SSME 1	MUX2_FROM_PDL
CH 3	PDL SSME 1	MUX2_FROM_PDL
CH 4	Unassigned	
CH 5	Unassigned	

NOTE

The Model 3303 NISN block demultiplexer is a 5-channel demultiplexer dedicated specifically to demultiplexing and/or deblocking of NISN block signals. It accepts a serial data stream of 4800-bit NISN blocks and demultiplexes them into individual output streams. The unit is comprised of three elements: an input data controller, the output channel controller, and a microprocessor unit controller. All control is accomplished using Front Panel controls or an RS-232 interface for computer control.

5.10 Telemetry Blockers

5.10.1 Communications Data Formatter Deblocker

The Communications Data Formatter (CDF) deblocker is capable of receiving NISN blocks on up to three input lines simultaneously and reserializing one selected TLM data stream onto one output line. Polynominal Error Protection (PEP) flags 1 and 2 are checked on all incoming blocks. Initialization procedures are in accordance with STDN No. 502.5

5.10.2 Operations

The CDF deblocker is used at MIL to deblock JSC OD R/T Serial Key Generator Recombiner (SKR) telemetry, Wallops range safety data, Ops Recorder dumps from WSC and MSFC, and DFRC postlanding data. The program default parameters are listed in table 5-7. Table 5-8 gives a list of program options available to the operator. Table 5-9 gives a list of parameter changes available to the operator. Table 5-10 list CDF destination codes.

5.10.3 Programmable Telemetry Processor Deblocker

The PTP deblocker uses a NISN Receiver handler to bring NISN bit-blocked data into the PTP from an external source. The receiver window removes the telemetry data from the bit block envelope and transmits the data to the Telemetry Deblocker (Deb) handler. The deblocker reserializes the data and retransmits it to an external source. The deblocker internal filter allows data to pass in accordance with user-specified parameters.

5.10.4 Operations

5.10.4.1 General

The PTP deblocker is used by DFRC to Quality Monitor (QM). The blocked data. The block data is turned around to the PTP deblocker and checked for frame sync, polarity and dropouts by the QM PTP. The deblocked serial data can be interfaced to other site equipment.

Table 5-7. Station Default Parameters for CDF Deblocker

Parameter (Note 1)	MIL	DFRC
Source	001	050
Destination	001	050
NDF	021	021
Circuit ID No.1	Destination Code (DC)	074
Circuit ID No. 2	NA	074
Circuit ID No. 3	NA	074
Message type	241(3)	241
Destination 2	(DC)	(DC)
Data length (Note 2)	(DC)	(DC)

NOTE

1. All values are octal unless otherwise specified.
2. Hexadecimal values.
3. For MIL JSC OD deblocking, change message type to 023.

Table 5-8. Operator Option Menu for CDF Deblocker

Key	Function
Start	Start deblocker operations
Stop	Stop deblocker operations
0	Display line status
1	Display QM status (not MIL) select block type mode (MIL only)
2	Select deblock bit rate
3	Select utilities (not MIL)
4	Modify/display Block Discrimination Parameters (BDP)
5	Enable/disable lines
6	Select and output TLM sim data
7	Display incoming header bytes
8	Select utilities (MIL only)
9	Select diagnostics
C	Clear counts (not MIL)
F	Display Function command menu

Table 5-9. Parameter Change Menu for CDF Deblocker

Key	Function
0	Change source code
1	Change destination code
2	Change NISN data format Change circuit ID No. 1 (not MIL)
3	Change circuit IDs (MIL only) Change circuit ID No. 3 (not MIL)
4	Change circuit ID No. 2 (not MIL)
5	Change message type (MIL only) Change message type (not MIL)
6	Change destination 2 code (MIL only)
7	Change data length (not MIL)
A	Abort and return to monitor mode

Table 5-10. CDF Destination Codes

Octal	Hex	Definition
022	12	MSFC 224-kb/sec JSC Dual 840-kb/sec
045 (1)	25	JSC 840-kb/sec circuits/KSC NCC 2
064	34	SOC 224-kb/sec circuit
067	37	SOC/NCC via 224-kb/sec circuits
105	45	JSC 840-kb/sec circuits/NCC 224-kb/sec circuits
144	64	JSC 840-kb/sec/MSFC 224-kb/sec
150 (1)	68	JSC 840-kb/sec circuits/KSC 224-kb/sec circuits
160 (1)	70	JSC 840-kb/sec circuits
242	A2	MSFC 56 kb/sec circuit
273 (1)	BB	NCC 224-kb/sec circuit
305	C5	KSC/NCC 224-kb/sec/MSFC 224-kb/sec
360	F0	KSC 224-kb/sec/MSFC 224-kb/sec
372	FA	MSFC 224-kb/sec circuit

NOTE

Flags the most commonly used codes.

5.10.4.2 CDF Deblocker Header Parameters

The blocks that are selected for deblocking are based on the header values the CDF checks on incoming NISN blocks. The values can be changed and enabled or disabled as checked by the operator. The new inserted values will be lost if the CDF is reinitialized. The header parameters can be changed and enabled after initialization as follows:

a. CDF blockers will allow modification and display of header parameters by pressing key 4.

b. To change byte value, select byte mode by pressing key B and then the corresponding key number for the parameter(s) to be changed.

c. To enable or disable checking of selected parameters select check mode by pressing key C and then the corresponding key number for the parameter(s) to be enabled or disabled for checking.

5.10.4.3 Initialization Procedures for MIL CDF Deblocker

	Operator Entry	Indication on Display	Remarks
a.	O,YES (SIMO)	SELECT:BLOCKER = 0 DEBLOCKER = 1	Mode select
b.	1	DEB: RX=+?? TX=+ QUE=00 M=G ST=D	Deblock monitor display

5.10.4.4 CDF Deblocker Rate Change Procedures for MIL Deblocker

Example to 96 kb/sec is as follows:

	Operator Entry	Indication on Display	Remarks
a.		DEB: RX=+?? TX=+ QUE=00 M=G ST=D	Deblock monitor display
b.	2	RATE SELECT: ABORT = A INSPECT = 0 192K = 1 128K = 2 96K = 3 64K = 4 KEYPAD INPUT = 5	Rate Select menu display
c.	3	DEB: RX=+?? TX=+ QUE=00 M=G ST=D	Rate selected
d.	2	RATE SELECT: ABORT = A INSPECT = 0 192K = 1 128K = 2 96K = 3 64K = 4 KEYPAD INPUT = 5	Rate Select menu display
e.	0	96 KBPS - 7 BUFFERS 03	Rate selected verified
f.	A	DEB: RX=+?? TX=+ QUE=00 M=G ST=D	Abort and return to monitor

5.11 Wallops Front End Processor

5.11.1 General

The WFEP is essentially a data formatter/blocker. The WFEP blocks spacecraft telemetry data (synchronous and asynchronous) into 4800-bit blocks, and then outputs them onto NISN circuits at various line rates. Wallops has three FEPs: one is configured for OD data, another is configured for SSME data, and the third is used as the hot backup to either the OD or the SSME data.

5.11.2 Input

Data sources can be either real-time or playback. The WFEP can accept up to three input data streams simultaneously, one stream through each of the three synchronizer cards. Depending on the synchronizer card setup, the data can be:

a. Transferred directly to one or more of the three multiplexer cards as raw data, blocked and placed on the NISN circuit (asynchronous mode).

b. Frame synchronized, then transferred to one or more of the multiplexer cards, blocked and placed on the NISN circuit (synchronized mode).

5.11.3 Initialization Procedures

Initialization procedures for the WFEP are listed in Section 4.2 of the Modular Environment for Data Systems (MEDS) User's Guide, 521-MEDS-001.

5.11.4 System Description

The WFEP Operator Interface (OPMAN) program provides the user interface for the overall configuration control and status monitoring of the WFEP system. Configuration control is maintained by allocating setup pages for each of the subsystems (cards) in the WFEP system. This enables the operator to change either the input requirements to the system (synchronizer card setup) or the output configurations (multiplexer card setup). Rarely would the input requirement change on a particular catalog (asynchronous to synchronous), but the output parameters such as the NISN block header information can be easily modified via the multiplexer card setup pages (see Figure 5-2). Status monitoring is available on various status screens. The system status screen (see Figure 5-3) lists all the subsystems in the WFEP and enables the monitoring of the entire WFEP operation. There are also individual status screens for each of the subsystems which list pertinent information. OPMAN is thoroughly documented in the Module Environment for Data Systems (MEDS) User’s Guide, 521-MEDS-001, and provides a description of each subsystem configuration page, status screen, and menu operating procedures.

5.11.5 Operations

5.11.5.1 General

The Operator Interface screen (see Figure 5-4) which is provided to the user, allows access to each of the MEDS commands. The OPMAN interface screen is shown and each of the MEDS commands are listed alphabetically and defined.

5.11.5.2 Telemetry

See Figure 5-5 for a list of the available telemetry formats which the WFEP currently supports and the associated WFEP catalog name.

5.11.5.3 Operating Procedures

a. From a status page, select the LOAD command.

b. Type in the catalog name.

c. Select which subsystems (cards) to download. See Figure 5-6.

d. After downloading is complete, select the activate command.

e. Select which cards are to be activated, which begins data flow.

f. To terminate the data flow, select the shutdown command, and specify which cards are to be shutdown.

5.11.5.4 Site Status Messages

Not available at Wallops.

Multiplexer MP1	HEADER SETUP02/18/92 09:27: SSME VØ [OTS] 'SPACE SHUTTLE MAIN ENGINES'			
	Channel #1	Channel #2	Channel #3	Channel #4
Block Format	3	3	3	4
1-ASYNC/DGIB	2-IMP 3-SHUTTLE			
4-PASSING BLOCK	5-DEBLOCKING			
Label	SSME 1__	SSME 2__	SSME 3__	NOT USED
Source Code(x)	60	60	60	00
Dest. Code(x)	A2	A2	A2	00
Seq. Start/End(d)	1/7	X/1	X/1	0/0
Format Code(x)	11	11	11	00
Spacecraft ID(x)	FF	FF	FF	00
Data Stream ID(x)	00	00	00	00
Message Type(x)	A0	A0	A0	00
Two Flags(x)	1	2	3	0
Data Length(d,bytes)	578	578	578	600
DGIB Blk Serial No.	NO_	NO_	NO_	NO_
IMP's "F" flags(x)	00	00	00	00
STS's 2nd Dest. (x)	A2	A2	A2	00
	Next-page PF4	User the RETURN key and arrow keys to move around the page.		
Exit ESC	Prev-page PF3			

Figure 5-2. NISN Header Setup

WFEP			SYSTEM STATUS02/18/92 09:13:				
	FS1	FS2	FS3				VS1
Blocks in	0	0	0			Frames in	0
Blocks out	0	0	0			Frames out	0
Frames in	0	0	0			Errors?	
Frames out	0	0	0				
Errors?	NO	NO	NO				
	MP1	MP2	MP3				TP1
Units in	0	0	0			Input File	
Units out	0	0	0			Total Frames	0
Records out	0	0	0			Frames out	0
Errors?						Error?	
DB1	File-Name	Ver Acc	Status	Err?	Total Recs	Recs-In	Recs-Out
#1		0	Ok	No	0	0	0
		0	Ok	No	0	0	0
RI1	3100	3000		3200		3300	
Msgs in	0	0		0		0	
Msgs out	0	0		0		0	
*Page	Activate	Zero	Load		Enable	Commands	Flush
Quit	Shutdown	Edit	Reset		Disable	fileInfo	Test

Figure 5-3. System Status

```
          OPERATOR INTERFACE (OPMAN)       02/18/92 08:52:31

-------------------------------------------------------------------------------

Use the arrow keys to move the marker through any menu.
You may also move the marker by pressing the first letter of an option.

When the marker is adjacent to a desired option, press ...

          RETURN        to select the option
          EXIT          to exit the current menu

The EXIT key will also work for any prompt.

When messages are reported and the cursor rests on the '+' character, press any key to continue.

Key Definitions:      Up:       UP        Exit:  ESC
                      Down:     DOWN
                      Left:     LEFT      Next-Page:  PF4
                      Right:    RIGHT     Prev-Page:  PF3

-------------------------------------------------------------------------------

Page  Activate      *Zero     Load      Enable                Commands    Flush
Quit  Shutdown      Edit      Reset     Disable               fileInfo    Test

     ACTIVATE.  The ACTIVATE command downloads a catalog and enables one or more subsystems.

     COMMANDS.  The COMMANDS comand allows the user to choose a special command.

     DISABLE.  The DISABLE command disables or turns off one or more subsystems.

     EDIT.  The EDIT command is the catalog editor.  You can change existing catalogs or create new ones.

     ENABLE.  The ENABLE command enables one or more subsystems.

     FILEINFO.  The FILEINFO command allows you to manipulate files (catalogs) and directories.  For
     example, you can list all catalogs in a directory using this command.

     LOAD.  The LOAD command allows the operator to download a catalog from a specific directory.

     PAGE.  The PAGE command shows any status page.

     QUIT.  Use the QUIT command to stop OPMAN and access the PDOS operating system.  You can also
     terminate all active subsystems through this command.

     RESET.  The RESET command sends a reset signal to selected subsystems.

     SHUTDOWN.  The SHUTDOWN comand unloads and disables one or more subsystems.

     ZERO.  The ZERO command sets all status counters to zero for all subsystems.  You will see the effects
     on any of the status pages.

     FLUSH.  The FLUSH command flushes residual data from all selected subsystems.

     TEST.  The TEST command causes selected subsystems to run test procedures.
```

Figure 5-4. Operator Interface Screen

```
SSME:CO          SPACE SHUTTLE MAIN ENGINES
STSFMPB:CO       SPACE SHUTTLE FM DL PLAYBACK
STSOD:CO         SHUTTLE OD 96KB OR 192KB
STSODPB:CO       SHUTTLE OD PLAYBACK

        DSID                WFEP CATALOG SUPPORTING

        017A                STSFMPB
        020C                STSFMPB
        020F                *SSME
        020G                STSOD
        020H                STSOD
        020J                STSODPB
        020K                STSODPB
        020O                STSFMPB
        020Q                STSFMPB
        020R                STSFMPB

*The SSME catalog also supports real-time SSME.

Formats:  020A, 020B, 020D, 020E, 020I, 020L, 020M, 020N, 020P, 020S, 020T, 020U, 020V,
020W, 020X, 020Y, 020Z, and 033Z are currently not required at Wallops.
```

Figure 5-5. WFEP Telemetry Formats

```
        WHICH CARDS DO I DOWNLOAD?      02/19/92  14l02:
-----------------------------------------------------------------------------
Name:           SSME                    Description:  SPACE SHUTTLE MAIN ENGINES
Version (0-4):  0                       Directory:  OTS
-----------------------------------------------------------------------------
OK!     Continue...                     x       FS1     SyncCard.............DSB
x       FS2     CyncCard...... DSB      x       FS3     SyncCard.............DSB
x       MP1     Multiplexer... DSB      x       MP2     Multiplexer..........DSB
x       MP3     Multiplexer... DSB


Mark (x) blocks you want to download.
Put BLANKS on blocks you want to skip.
Select OK to begin.  Press ESC to abort.
```

Figure 5-6. Card Download Options

Table 5-11. Destination Codes

Destination Code (Oct)	Destination	User Line Rate	
064	SOC	SOC 224 kb/sec	
067	SOC/NCC	SOC 224 kb/sec	NCC 224 kb/sec
273	NCC	NCC 224 kb/sec	
160	JSC	JSC Dual 840 kb/sec	
105	JSC/NCC	JSC Dual 840 kb/sec	NCC 224 kb/sec
144	JSC/MSFC	JSC Dual 840 kb/sec	MSFC 224 kb/sec
150	JSC/MIL	JSC Dual 840 kb/sec MIL 224 kb/sec	
045	JSC/NCC/MIL	JSC Dual 840 kb/sec MIL 224 kb/sec	NCC 224 kb/sec
242	MSFC	MSFC 56 kb/sec	
360	MSFC/MIL	MSFC 840 kb/sec	MIL 224 kb/sec
305	MSFC/NCC/MIL	MSFC 840 kb/sec MIL 224 kb/sec	NCC 224 kb/sec
372	MSFC	MSFC 224 kb/sec	
214	JSC	JSC 224 kb/sec (Note)	
022	JSC/MSFC	MSFC 224 kb/sec JSC Dual 840 kb/sec	

NOTE

Command echoes and Type III playback data only.

Section 6. Command

6.1 General

The Orbiter S-band uplink (CMD/Voice) will be operated in the encrypted mode.

6.1.1 Supporting Stations

The SFL at MIL, the Type I NCPS at DFRC, the Type II NCPS at MIL and PDL, and the NCPS at WPS are used to provide S-band CMD support. The stations and their support capabilities are identified in Table 1-2. Paragraphs 6.2 and 6.3 provide an NCPS system description and operations, while paragraph 6.4 describes the NCPS.

6.1.2 Applicable Documentation

6.1.2.1 NCPS Required Documentation

STDN No. 502.6 contains a description of the NCPS and operational procedures for applicable stations.

6.1.2.2 SFL Required Documentation

STDN No. 502.6 contains descriptions of the SFL and operational procedures for applicable stations.

6.1.3 Radio Frequency Parameters

Section 4 defines the RF requirements for S-band command support of Space Shuttle missions.

6.2 SFL System Description (MIL Only)

6.2.1 Introduction

The SFL receives CMD data from one of three sources (LCC-1, LCC-3, or JSC), processes the data based on source allocation, and channels the data for UL to the SSO. The SFL cannot generate CMDs locally or provide a CMD history.

6.2.2 Input Data Modes

The SFL can be operated in the following modes:

a. KSC LCC. In this mode, the SFL receives and processes 216-, 72-, 96-, or 32-kb/sec serial CMD data from KSC/LCC. The CMD stream is composed of Shuttle sync, CMD, and voice. This data can be switched directly to the RF exciter or SFL convolutional encoder. The data source selection for this mode will be one of the following:

   1. LCC1. Selects LCC input, 72- or 32-kb/sec serial CMD/voice fill, plain text. (This is the normal mode of operation for KSC support.)
   2. LCC2. Selects LCC input, 72- or 32-kb/sec serial CMD/voice, plain text.
   3. KSC2C (MIL/PDL Only). Selects KSC control room 3 serial input, 216- or 72-kb/sec serial CMD/voice, plain text, and rate one-third convolutionally encoded.
   4. KSC2S (MIL/PDL Only). Same as LCC2.

b. JSC. Selects NISN blocked input mode. In this mode, the SFL will receive and process 32- or 72-kb/sec contiguous NISN blocked data (see Figure 6-1). Refer to the Note.

NOTE

This JSC mode is no longer used. JSC commanding is supported using the NCPS. This mode can be used in a contingency if both MIL NCPSs fail.

6.2.3 SFL/CMD Verification

MIL will patch the red SFL recorder verification output and extend it to the KSC RPS. This configuration is required for the prelaunch and ascent phases only.

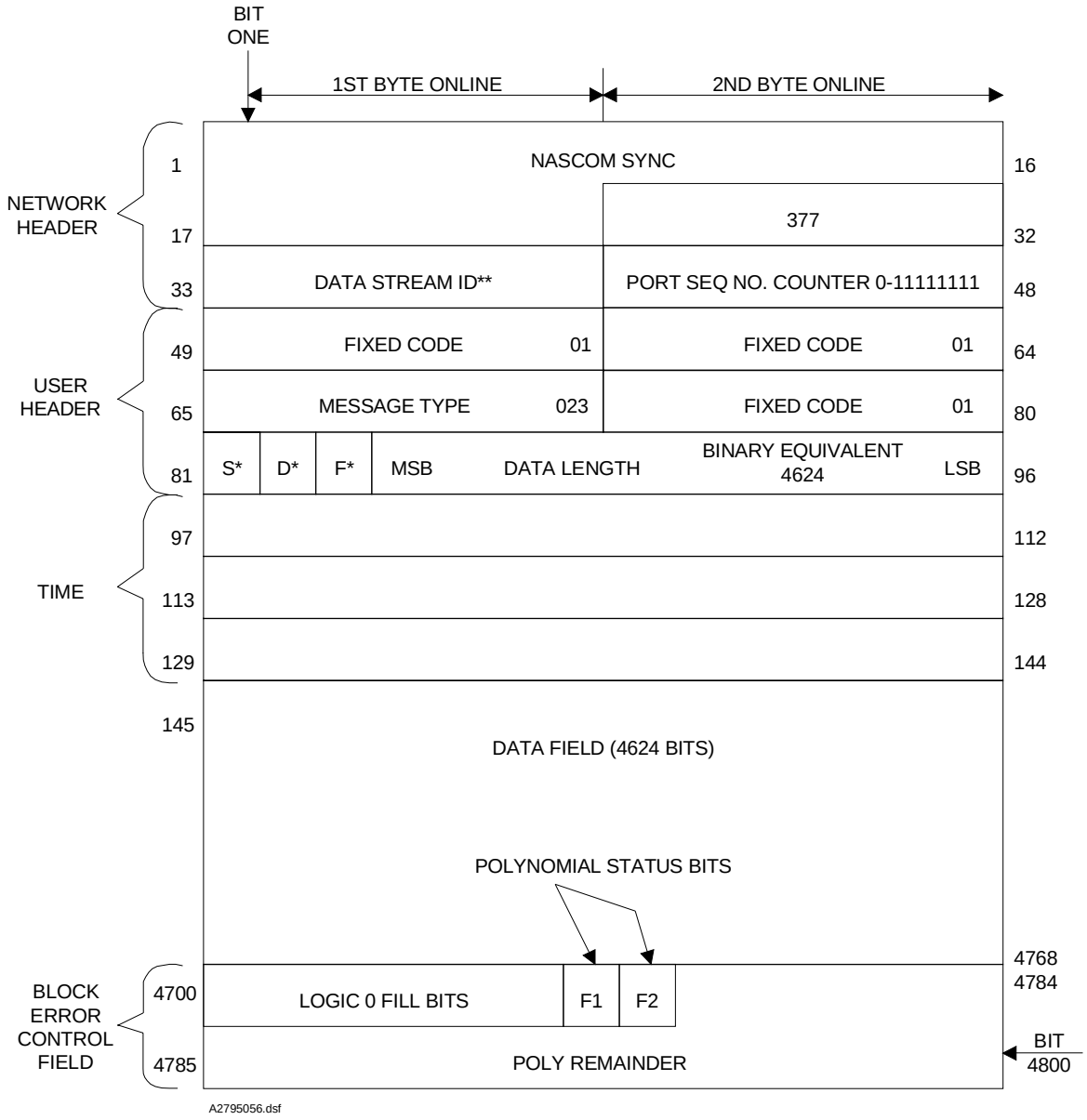

*S = spare bit = 0.
D = datagram = 0.
F = full block flag = 1.

** 240 = Orbiter 1 LDR
241 = Orbiter 1 HDR
242 = Orbiter 2 LDR
243 = Orbiter 2 HDR

NOTE

All code values are octal.

Figure 6-1. JSC Command Block Format

6.3 SFL Initialization

6.3.1

The two processor switches on the SFL front panel have no effect on the operations of the system as long as the operational firmware is installed in the system. To initialize the SFL, press the reset switch on the front panel of the SFL. The blocker and deblocker LEDs on the front panel will begin to flash off and on indicating that the processors are cycling. The operational screen will be displayed on the terminal. The Station Select Menu will appear in the center of the screen.

6.3.2

The operator will make the station selection at this time. The SFL will default to normal operational configuration for the station that was selected. When the station selection is made, the SAFE menu will be displayed. At this time, the operator may make any changes in the configuration that is needed.

6.3.3

Any configuration that would deviate from what would be considered the normal real-time operational configuration for the particular station that has been selected will be displayed in reverse video in the operational configuration display area. This is not considered an error, but simply serves as an advisory to the operator.

6.3.4

Once the station selection has been made, the operator will make the data parameters selection from the SAFE menu. At this time, the Flight ID and Vehicle ID will be assigned to Orbiter 1 (and Orbiter 2, if applicable). The destination code for status and echo blocks will also be selected at this time. The destination code selection will be made from the data parameters menu also.

NOTE

At this point, the SFL is ready for operational support.

6.4 Type III Command Histories

6.4.1

One-third rate convolutionally encoded UL CMD verification data recorded on analog tape during a pass is input to the RSDP system, via NCPS tape mode, for postpass playback to JSC. Data blocks are time-tagged with PB time by the RSDP system. Analog tape playback is in the forward direction at 1:1 data rate (same as recorded speed).

NOTE

The operate mode should not be entered during tape playback operations.

6.4.2

Stations equipped with viterbi decoders will configure the systems during the playback.

6.5 CSS

The Cornet MTX-RFHS is a non-blocking, high-speed digital matrix that enables the interconnection of up to 32 high-speed RF sources to 32 loads. The Command switch is basically the same as the Receiver Video switch with the addition of a contact closure interface. This interface will switch a maximum of 16 pairs of contact closures and 20 separate RF signals. The switch interface panel groups the various devices together that form "Command Groups" and "Exciter Groups." Each group consists of the following signals: Baseband Modulation, Scientific Modulation, Baseband Verification, Scientific Verification, Command Ready, and Antenna/Dummy load. MIL's Command switch configuration is four Command Groups by seven Exciter Groups. PDL's Command switch configuration is four Command Groups by six Exciter Groups.

Launch

Command1 (NCPS 1)	Exciter 1 or 2
Command2 (NCPS 2)	Exciter 3 or 4

Orbit

Command1 (NCPS 1)	Exciter 1 or 2

Landing

Command1 (NCPS 1)	Exciter 3 or 4
Command2 (NCPS 2)	Exciter 1 or 2

PDL Command Switch Configuration

Launch

Command1 (NCPS)	Exciter 1

6.6 NCPS System Description

6.6.1 General

6.6.1.1 Introduction

The NCPS receives CMD data from one of three modes (JSC, TAPE, EVCF) and processes the data based on Source, Destination, PEP Error, and Data Stream Identification (DSID) selection. The NCPS can provide the MCC with a means of deblocking forward shuttle command messages and throughput them for uplink through an exciter. The echo and status blocks can be routed to the PTP or Mux for transfer to GSFC/JSC. Refer to Figures 6-2 and 6-3 for NCPS command echo and status blocks, respectively. The NCPS cannot generate CMDs locally or provide a CMD history. Refer to Figure 6-4 for a MIL/PDL throughput command data flow configuration.

6.6.1.2 Input Data Modes

The NCPS can be operated in the following modes:

a. JSC Mode. Selects NISN blocked input mode. In this mode, the NCPS will receive and process 32- or 72-kb/sec contiguous NISN blocked data.

   1. Launch support for MIL/WPS:

      (a) JSC.

      (b) HDR.

      (c) Code ON.

   2. Orbit support for MIL/WPS/DFRC:

      (a) JSC.

      (b) HDR.

      (c) Code OFF.

b. Tape Playback Mode. The NCPS can play back the command data which was recorded on analog tape during the orbit contact. If the data was recorded with convolutional coding enabled, the NCPS will remove the convolutional coding. The information is then blocked into Type III history messages and sent over a NISN circuit. Time extracted from the analog tape is used for time tagging the history message blocks.

c. Emergency Voice Command Fill (EVCF) Mode. This mode permits a site which has access to analog voice and a DMS to support emergency voice contact with the orbiter. The NCPS will supply a command structure containing zero command data and the digital voice frames.

4800 BIT BLOCK - 600 8-BIT BYTES
BIT/BYTE ALIGNMENT

BYTE NO.	1 2 3 4 5 6 7 8	9 10 11 12 13 14 15 16	BYTE NO.
1	NISN SYNC (8)	NASCOM SYNC (8)	2
3	NISN SYNC (8)	SOURCE (6)	4
5	DESTINATION (8)	SEQ NO. (3) NDF (5)	6
7	SOURCE CIRCUIT ID (8)	SOURCE S-COUNTER (4) (S) BLK SEQ (3)	8
9	MESSAGE TYPE (8)	DESTINATION CODE (8)	10
11	S(2) F(1) BINARY COUNT OF DATA LENGTH (13)		12
13	TIME FIELD (48 BITS - 6 BYTES)		18
19	DATA FIELD (4624 BITS)		100
101			596
597	ERROR DETECTION (24 BITS)		

S = SPARE

a2795057.dsf

Figure 6-2. NCPS Command Echo Block

4800 BIT BLOCK - 600 8-BIT BYTES
BIT/BYTE ALIGNMENT

BYTE NO.	1 2 3 4 5 6 7 8	9 10 11 12 13 14 15 16	BYTE NO.
1	NISN SYNC (8)	NISN SYNC (8)	2
3	NISN SYNC (8)	SOURCE (6)	4
5	DESTINATION (8)	SEQ NO. (3) NDF (5)	6
7	SOURCE CIRCUIT ID (8)	SOURCE S-COUNTER (4) (S) BLK SEQ (3)	8
9	MESSAGE TYPE (8)	DESTINATION CODE (8)	10
11	S(2) F(1) BINARY COUNT OF DATA LENGTH (13)		12
13	TIME FIELD (48 BITS - 6 BYTES)		18
19	FWD LINK STATUS BYTES 19 THROUGH 100 BYTE 105, 117, 127, AND 128		100
101	BYTES 101 THROUGH 597 NOT USED EXCEPT WHERE NOTED ABOVE		596
597	ERROR DETECTION (24 BITS)		

S = SPARE

a2795058.dsf

Figure 6-3. NCPS Status Block

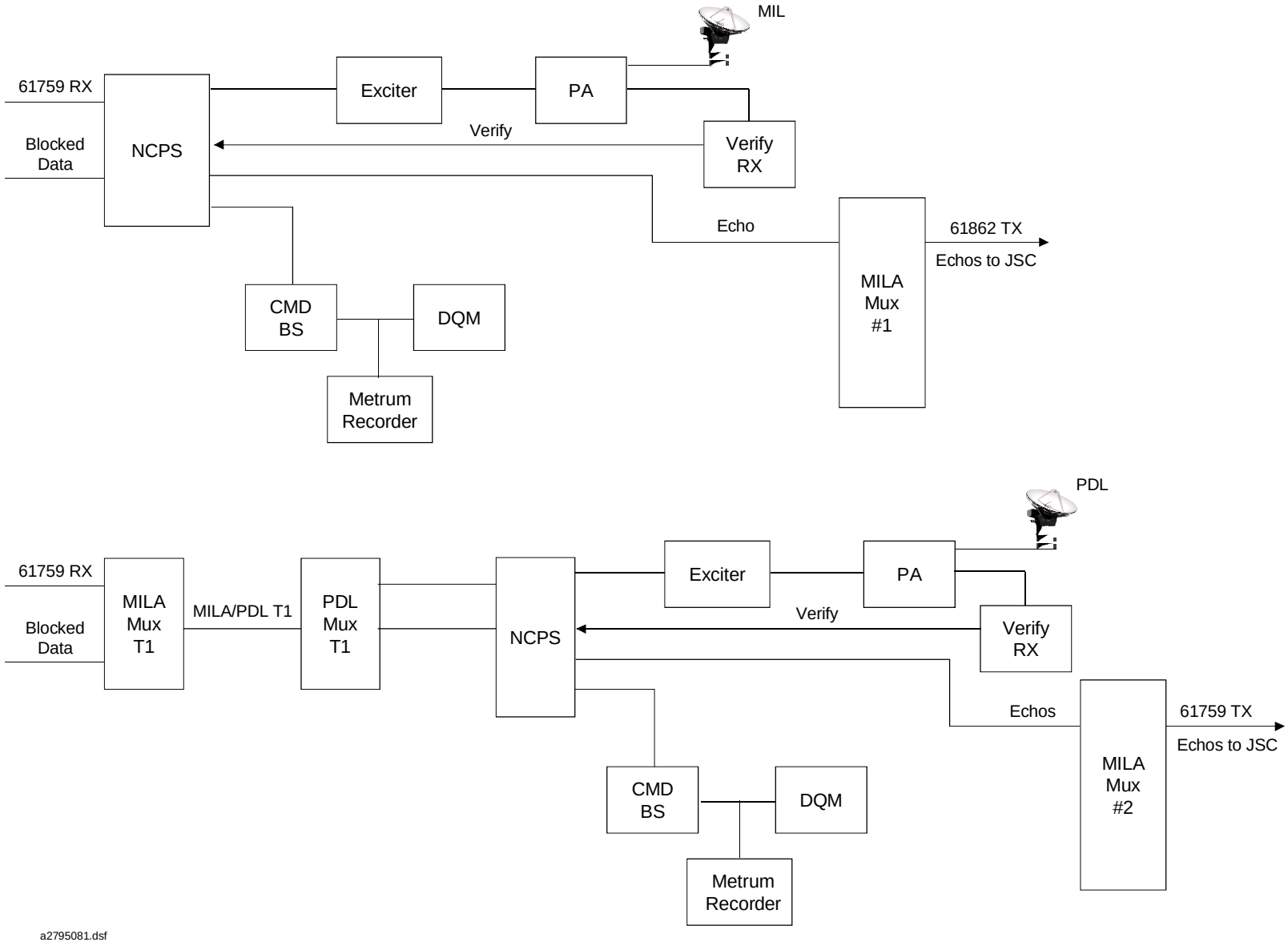

Figure 6-4. MIL/PDLThroughput Commands

6.6.1.3 NCPS/CMD Echo/Status

Command echo messages can be generated from verification receiver data in the external mode and from the NCPS in the internal mode. Site status messages are available to provide remote users with an understanding of the real-time operating status of the NCPS.

6.6.2 NCPS Description

The NCPS display is divided into three sections. The top portion of the screen is the alarm area used to show the advisory error messages. The center portion of the screen is the attribute display for operating status of the NCPS. The bottom of the screen is where the different menus are displayed.

6.6.3 Operational Configuration Display Area

6.6.3.1 Operational Configuration Display

a. STATION. This is the station for which the NCPS is currently initialized.

b. STATION ID. This is the station ID number for the station.

c. GMT. This field shows the current GMT or playback time.

d. SEQ. This field indicates the level of firmware under which the NCPS is currently operating.

e. MODE. This field indicates the current mode of operation (OPERATE/SAFE).

f. ADVISORY PRINT. This field indicates the error advisory messages displayed on top portion of screen will be printed on the line printer.

g. DIALOG PRINT. This field indicates the menu display, type in error messages, and unprompt type in will be printed on the line printer.

h. DATA SOURCE. This field indicates the source of CMD data that the NCPS is currently initialized to accept and uplink (JSC/TAPE/EVCF).

i. DATA RATE/ORB. This field indicates the data rate that the NCPS is configured to uplink (LOW for 32 kb/sec or HIGH for 72 kb/sec). The ORB field indicates the Orbiter that the NCPS is currently configured to command (Orb = 1 or Orb = 2).

j. CODE. This field indicates whether convolutional encoding/decoding is enabled for ascent or disabled for orbital support (ON/OFF).

k. DATA PATH. This field indicates whether or not the UL and verify data will be routed to encryption/decryption equipment (NORMAL/SECURE).

l. ECHO/DST. This field indicates when CMD echo blocks are enabled or disabled, and the destination code to which they will be transmitted (ON/OFF)/(XXX = octal destination code).

m. STATUS/DST. This field indicates when status blocks are enabled or disabled, and the destination code to which they will be transmitted (ON/OFF)/(XXX = octal destination code).

n. RF LOAD. This field indicates whether the NCPS is configured to the antenna or a dummy load (ANT/DUMMY LOAD).

o. RF STATUS. This field indicates the status of the CMD ready bit from the RF section, and whether the NCPS is configured for carrier up to antenna or a dummy load, and modulation is applied (GO/NO GO).

p. RF VERIFY LOOP. This field shows the source of RF verify data (INTERNAL/EXTERNAL).

q. CODE LOCK. This field indicates whether convolutional encoding/decoding is enabled or disabled (ON/OFF).

r. ORBITER 1 FLT ID/VID. This selection will allow the operator to enter a decimal Flight ID and VID for Orbiter 1.

s. ORBITER 2 FLT ID/VID. This selection will allow the operator to enter a decimal Flight ID and VID for Orbiter 2.

t. PEP/HEADER. This is a toggled function used to select JSC block acceptance/rejection on the basis of block header errors.

6.6.3.2 Dynamic Status Display Area

a. RF VERIFY ERRORS. This field will increment when RF errors are present.

b. DELAY IN BITS. This is the number of bits delay in the RF loop as measured by the NCPS when the operate mode was entered. During the delay measurement, this field will indicate MEASURING.

c. BLOCKS RECEIVED. This field shows an accumulative count of the number of HSDL blocks that have been received.

d. TOTAL INVALID BLOCKS. This field shows an accumulative count of the number of HSDL blocks that have been rejected on the basis of PEP Errors and Header Errors.

e. PEP ERRORS. This field shows an accumulative count of the number of HSDL blocks that have been received with PEP errors.

f. HEADER ERRORS. This field shows an accumulative count of the number of HSDL blocks that have been received with header errors.

g. BLOCKS UPLINKED. This field shows an accumulative count of the number of valid blocks that have been uplinked.

h. STATUS BLOCKS. This is an accumulative count of the number of status blocks that have been transmitted.

i. ECHO BLOCKS. This is an accumulative count of the number of CMD echo blocks that have been transmitted.

j. BLOCKS OUTPUT. This field shows an accumulative count of all status and echo blocks that have been transmitted.

6.6.4 Menu Display Area

6.6.4.1 General

The following is a detailed description of the menus available on the NCPS. (See Figures 6-5 through 6-7.) All operator entries must be followed by a return. Some of the selections made by the operator will result in the display of the other menus for data entry. Other selections will result in a toggle function that will cause the particular parameter being accessed to change from the current state to the opposite state.

6.6.4.2 JSC SAFE MODE Menu

a. The NCPS defaults to the SAFE MODE when Initialization menu is entered and the default attribute file parameters.

b. OPERATE MODE. This selection will cause the NCPS to go to the OPERATE mode.

c. ECHO (ON/OFF). This selection is used to enable or disable the transmission of echo blocks.

d. STATUS (ON/OFF). This selection is used to enable or disable the transmission of status blocks.

e. DATA PARAMETERS. This selection is used to enter ECHO destination code, STATUS destination code, ORBITER 1 FLIGHT ID number, ORBITER 1 VID number, ORBITER 2 FLIGHT ID number, and ORBITER 2 VID number for JSC UPLINK.

f. CODE (ON/OFF). This is a toggled function used to enable or disable convolutional encoding/decoding at the NCPS.

g. DATA RATE (LOW/HIGH). This is a toggled function used to select LDR UL (32 kb/sec) or HDR UL (72 kb/sec).

h. VERIFY LOOP (EXT/INT). This is a toggled function used to select RF verify. The NCPS should be in the external mode unless notified different.

i. ORBITER (1/2). This is a toggled function used to select which Orbiter is to be commanded. This selection, in conjunction with the data rate selection, will be used by the NCPS to determine the DSIDs which are valid for uplinking.

j. HEADER ERROR HANDLING. This is a toggled function used to select JSC block acceptance/rejection on the basis of PEP errors and block header errors.

NCPS MESSAGE AREA

A ERROR ADVISORY MESSAGE AREA
B
C
D

WLP/006	GMT DDD:HH:MM:SS	SEQ 3610.XXX MMM-DD-YY
NCPS SHUTTLE	JSC SAFE MODE	ADVISORY = PRINT
		DIALOG = PRINT

DATA SOURCE =======	JSC	ORBITER 1 FLT ID/VID =	00000/000
DATA RATE/ORB =====	high/0001	ORBITER 2 FLT ID/VID =	00000/000
CODE ==========	on	PEP/HEADER==========	accpt/reject
DATA PATH =========	normal	BLOCKS RECEIVED ======	000
ECHO/DST ==========	off/273	TOTAL INVALID BLOCKS =	00000
STATUS/DST =========	off/273	PEP ERRORS ==========	00000
RF LOAD ==========	antenna	HEADER ERRORS======	00000
RF STATUS ==========	go	BLOCKS UPLINKED =====	00000
RF VERIFY ERRORS====	00000	STATUS BLOCKS ========	00000
RF VERIFY LOOP =====	external	ECHO BLOCKS ==========	00000
DELAY IN BITS =======	000	BLOCKS OUTPUT ========	00000
CODE LOCK =========	unlocked		

(TYPEIN ERROR) JSC MODE

1)<-SHUTTLE INITIALIZATION MENU
2)<> OPERATE MODE
3) ECHO [on/off]
4) STATUS [on/off]
5) -> DATA PARAMETERS
6) CODE [on/off]
7) DATA RATE [low/high]
8) VERIFY LOOP [ext/int]
9) ORBITER [1/2]
10)-> BLOCK ERROR HANDLING

NCPS-> :

Figure 6-5. JSC Mode Menu Display

```
-----------------------------------------------------------------------------------------------------------

A                ERROR ADVISORY MESSAGE AREA
B
C
D

-----------------------------------------------------------------------------------------------------------

WLP/006              TCT DDD:HH:MM:SS        SEQ 3610.XXX MMM-DD-YY
NCPS SHUTTLE         TAPE SAFE MODE           ADVISORY = PRINT
                                              DIALOG   = PRINT

DATA SOURCE ====== TAPE                       ORBITER 1 FLT ID/VID = 00000/000
DATA RATE/ORB ==== high/0001                  ORBITER 2 FLT ID/VID = 00000/000
CODE ============= on/off

HISTORY/DST ====== off/273
STATUS/DST ======= off/273


                                              STATUS BLOCKS======== 00000
                                              HISTORY BLOCKS======== 00000
                                              BLOCKS OUTPUT======== 00000

CODE LOCK ======== unlocked

-----------------------------------------------------------------------------------------------------------

(TYPEIN ERRORS)       TAPE  MODE
1)<- SHUTTLE INITIALIZATION MENU                6) CODE [on/off]
2)<> OPERATE MODE                               7) DATA RATE [low/high]
3) HISTORY [on/off]                             8) ORBITER [1/2]
4) STATUS [on/off]
5) -> DATA PARAMETERS
NCPS-> :

-----------------------------------------------------------------------------------------------------------
```

Figure 6-6. Tape Mode Menu Display

```
-----------------------------------------------------------------------------------------------------------

A              ERROR ADVISORY MESSAGE AREA
B
C
D

-----------------------------------------------------------------------------------------------------------

WLP/006                  GMT DDD:HH:MM:SS      SEQ 3610.XXX MMM-DD-YY
NCPS SHUTTLE             EVCF SAFE MODE        ADVISORY   = PRINT
                                               DIALOG     = PRINT


DATA SOURCE ======EVCF                         ORBITER 1 FLT ID/VID = 00000/000
DATA RATE/ORB ==== high/0001                   ORBITER 2 FLT ID/VID = 00000/000
CODE ============= on

ECHO/DST ========= off/273
STATUS/DST ======= off/273
RF LOAD ========== dummy load
RF STATUS ======== no go
RF VERIFY ERRORS = 00000                       STATUS BLOCKS ======== 00000
RF VERIFY LOOP === external                    ECHO BLOCKS ========== 00000
DELAY IN BITS ===== 00001
CODE LOCK ======== locked                      BLOCKS OUTPUT ======== 00000
FRAME RATE ======= 00050

-----------------------------------------------------------------------------------------------------------

(TYPEIN ERRORS)                                EVCF SAFE MODE
1)<- SHUTTLE INITIALIZATION MENU               6) CODE [on/off]
2)<> OPERATE MODE                              7) DATA RATE [low/high]
3) ECHO [on/off]                               8) VERIFY LOOP [ext/int]
4) STATUS [on/off]                             9) ORBITER [1/2]
5)-> DATA PARAMETERS
NCPS-> :

-----------------------------------------------------------------------------------------------------------
```

Figure 6-7. EVCF Mode Menu Display

6.6.4.3 JSC Operate Mode Menu

a. SAFE MODE. This selection will direct the NCPS to go to the SAFE MODE.

b. ECHO (ON/OFF). This is a toggled function used to enable or disable the transmission of CMD echo blocks. If the CMD echoes are disabled, this selection will enable them. If the CMD echoes are enabled, this selection will disable them.

c. STATUS (ON/OFF). This is a toggled function used to enable or disable the transmission of status blocks.

d. DATA PARAMETERS. This function is used to assign the ECHO destination code, STATUS destination code, ORBITER 1 FLIGHT ID number, ORBITER 1 VID number, ORBITER 2 FLIGHT ID number, and ORBITER 2 VID number.

6.6.4.4 TAPE Mode

a. The NCPS defaults to the SAFE MODE when the initialization menu is entered and the default attribute file parameters.

b. SHUTTLE INITIALIZATION MENU. This menu returns back to options for JSC, TAPE, or EVCF.

c. OPERATE. This is a toggled function used to select OPERATE or SAFE MODE. The NCPS should be in the OPERATE MODE for tape playback operations.

d. HISTORY (ON/OFF). This is a toggled function used to select enable/disable data on line for tape playback operations.

e. STATUS (ON/OFF). This is a toggled function used to select enable/disable status block operations.

f. DATA PARAMETERS. This function is used to assign HISTORY destination code, STATUS destination code, ORBITER 1 FLIGHT ID number, ORBITER 1 VID number, ORBITER 2 FLIGHT ID number, and ORBITER 2 VID number for JSC.

g. CODE (ON/OFF) if tape has convolutional encoding/decoding. Display will indicate lock/unlock.

h. DATA RATE (LOW/HIGH). This is a toggled function used to select LDR UL (32 kb/sec) or HDR UL (72 kb/sec).

i. ORBITER (1/2). This is a toggled function used to select which Orbiter was commanded to.

6.6.4.5 EVCF SAFE Mode

a. The NCPS defaults to the SAFE MODE when in the Initialization menu and the default attribute file parameters.

b. OPERATE. This selection will direct the NCPS to be in the OPERATE MODE and delay measurement is completed.

c. ECHO (ON/OFF). This is a toggled function used to select enable/disable echo blocks.

d. STATUS (ON/OFF). This is a toggled function used to select enable/disable status blocks.

e. DATA PARAMETERS. This function is used to assign ECHO destination code, STATUS destination code, ORBITER 1 FLIGHT ID number, ORBITER 1 VID number, ORBITER 2 FLIGHT ID number, ORBITER 2 VID number for JSC.

f. CODE (ON/OFF). This is a toggled function used to enable or disable convolutional encoding/decoding at the NCPS.

g. DATA RATE (LOW/HIGH). This is a toggled function used to select LDR UL (32 kb/sec) or HDR UL (72 kb/sec).

h. VERIFY LOOP (EXT/INT). This is a toggled function used to select RF verify. The NCPS should be in the external mode unless notified different.

i. ORBITER (1/2). This is a toggled function used to select which Orbiter is to be commanded. This selection, in conjunction with the data rate selection, will be used by the NCPS to determine the DSIDs which are valid for uplinking.

6.6.4.6 Utilities Menu

a. INITIALIZATION MENU. This menu displays UTILITIES, JSC, TAPE and EVCF.

b. PROTECTED UTILITIES MENU. This option has a log in and password before able to display DIRECTORY SUPPORT, ATTRIBUTE FILES, and CHANGE PASSWORD.

c. ADVISORY MESSAGES (print/noprint). This is a toggled function used enable/disable the ERROR ADVISORY MESSAGES, top portion of the screen, to be printed on the line printer.

d. OPERATOR ENTRY (print/noprint). This is a toggled function used to enable/disable the DIALOG AREA, ERROR TYPE INS, and unprompt type ins, bottom portion of the screen, to be printed on the line printer.

e. LIST FILES. This displays the files on the hard disk which was loaded from the floppy disk and streaming tape.

f. FLOPPY DISK DEVICE contains Utilities menu, List, Extract from floppy, Create to floppy, Append to floppy, and Format floppy.

g. STREAMING TAPE DEVICE contains Utilities menu, List, Extract from tape, Create to tape.

6.6.4.7 Unprompt Type-INS

a. PRI.

b. CA.

Section 7. Flight Dynamics Facility

7.1 Introduction

The FDF provides all NASA and DOD tracking stations supporting the Space Shuttle with premission, on-orbit, and landing acquisition data. Acquisition data is provided in the form of an IRV, an Improved Interrange Vector (IIRV), or an INP, dependent on the antenna system. Refer to STDN No. 724 for the message formats. Premission acquisition data is generated using JSC-supplied trajectory data. During mission operations, the FDF receives vectors from JSC. The FDF processes these vectors then generates and transmits acquisition data to all supporting stations which have a view (refer to Table 7-1). In addition to acquisition data generation, the FDF performs real-time tracking data evaluation, planning data generation, and supports network fault isolation functions.

7.2 Operational Communications

7.2.1 Introduction

Acquisition data coordination and ephemeris products coordination are the responsibility of the FDF operational personnel during all flights. The callsign for the FDF is FDF COM and the direct interface is Goddard Track at GSFC, DOD Track at ER, and DFE at JSC. Additionally, a representative with the callsign FDF Analyst is available for interface with both Goddard Track at GSFC and DFE at JSC. These representatives are available during the normal workday (Monday through Friday from 8 a.m. to 5 p.m.), and as scheduled during mission support and premission testing.

7.2.2 Operational Systems

The FDF will support the Space Shuttle mission with two redundant computer systems.

7.3 Mission Participation

7.3.1 Planning Phase

The FDF generates and forwards planning data to the Mission Services Project, Code 450, and other GSFC elements supporting Space Shuttle missions. Products are distributed via the Internet.

7.3.2 Planning Data

JSC will provide the FDF with planning data every 24 hours during the mission. The planning data should cover a time span of approximately 48 hours. Based on this planning data, the FDF will generate planning products for distribution to the Mission Services Project, Code 450, and other GSFC elements supporting Space Shuttle missions. Products are distributed via the Internet.

7.3.3 Terminal Count Support

FDF conducts IIRV I/F tests with JSC and provides metric tracking data analysis in accordance with the Space Shuttle launch count.

7.3.4 Displays

The FDF provides a 3-D graphical display to the Attached Shuttle Payload Center (ASPC) which displays a representation of the Space Shuttle and its environment. The display is based on real-time Customer Ancillary System (CAS) data provided by JSC.

7.3.5 Data Validation

Real-time tracking data (except AFSCN/RTS) is routinely analyzed for initial quality assurance through identification of noise, station bias, and data dropout problems. This quick-look evaluation ensures that successful orbit determination may be achieved.

7.3.6 Fault Isolation

On direction from GSFC SMM, metric tracking data analysis is performed (except AFSCN/RTS) for fault isolation of ground stations, RF equipment, ranging equipment, receivers, antenna angle encoders, etc.

7.4 Acquisition Data

7.4.1 General

7.4.1.1 Space Shuttle Flights

For all Space Shuttle flights, acquisition data will be generated and transmitted by FDF.

7.4.1.2 Acquisition Data Responsibilities

Table 7-1 lists all stations and antenna identifiers to which acquisition data is furnished for Space Shuttle missions.

7.4.2 Premission Phase

7.4.2.1 Nominal Acquisition Data

FDF generates and transmits nominal acquisition data to supporting stations no earlier than launch minus 7 days and no later than launch minus 3 days. Three hours of acquisition data are generated from JSC-supplied trajectory data. For all missions, 150 minutes of data are transmitted to supporting stations as indicated. Prior to transmission, an ISI will be sent to supporting stations identifying time and type of data transmitted. Stations are to acknowledge receipt of acquisition data in accordance with the ISI. Refer to Table 7-2 for acquisition message distribution.

7.4.2.2 Contingency Acquisition Data

JSC provides a series of trajectories to include Space Shuttle mission contingencies. For all contingency situations, FDF generates only INPs. The two-digit channel identification field in line 1 of the INP is used to identify the contingency situation covered by that INP. Table 7-3 contains a correlation between contingency situation and the channel identification. Contingency data is transmitted no earlier than launch minus 7 days and no later than launch minus 3 days. Prior to transmission, an ISI will be sent to supporting stations identifying time and type of data to be transmitted. Stations are to acknowledge receipt of the acquisition data in accordance with the ISI. GSFC Track will verbally alert stations no later than AOS minus 5 minutes as to which acquisition data is required for support.

7.4.3 Mission Phase Acquisition Data

7.4.3.1 General

a. The source for FDF acquisition data will be JSC. IIRVs will normally be transmitted on, but not limited to, each GMT hour. The JSC IIRV will be sent to FDF in a 4800-bit block, processed by FDF, and transmitted to supporting stations. Applicable acquisition data will be sent to stations having a view within a specified projection interval, currently programmed for 110 minutes. The first transmission of real-time acquisition messages is nominally scheduled to commence after T plus 25 minutes. Earlier transmissions could occur dependent on mission profile. Table 7-2 summarizes distribution of real-time acquisition data according to mission phase.

b. The receipt of acquisition data does not imply that a station is scheduled to support. Station scheduling is the responsibility of each respective center.

7.4.3.2 Onorbit Phase

In general, JSC IIRVs will be sent to the FDF hourly; however, updates and retransmissions may occur at any time. Each onorbit transmission from JSC (i.e., hourly update or retransmission) will reflect the trajectory for a 120-minute interval. On receipt of each JSC IIRV or set of IIRVs, the FDF will generate acquisition data for sites having a view period within a projection interval of 110 minutes. Table 7-2 provides a summary of prime acquisition data and its distribution.

7.4.3.3 Maneuvers

Sites viewing a maneuver within a 110-minute projection interval will receive acquisition data per Table 7-2, Maneuvers column.

7.4.3.4 Entry/Landing Phase

JSC will provide FDF with the end-of-mission trajectory at No Later Than (NLT) WOW minus 1 hour and 15 minutes for the GN. Goddard Track will use the two-digit channel field in line 1 of the INP to notify stations verbally as to which acquisition data set is required for entry/landing support.

7.4.3.5 Retransmission of Acquisition Data

It is the stations' responsibility (NASA and DOD) to request retransmission of acquisition data by Horizon (H)-25 minutes. For GN, the GSFC SMM is the point-of-contact in the event of negative receipt of acquisition data. For DOD stations, DOD Track is the point of contact for negative receipt of acquisition data.

7.5 C-band and S-band Station Antenna Identification

Refer to Table 7-1 for station antenna identification.

7.6 GSFC Bypass Acquisition Data Plan

7.6.1

In the event that the GSFC Building 3/14 must be vacated, rendering NISN inoperative and therfore preventing FDF transmission of acquisition data to the network, the NCC must also relocate. The ND will (under these conditions) advise DOD Track at Cape Canaveral that FDF is no longer capable of transmitting acquisition data for DOD and GN stations, and the DOD Acquisition Data Generation Plan must be implemented. The ER/ROCC will then commence generating acquisition data for delivery via DOD circuitry to DOD stations and to GN station at Merritt Island. If requested, a representative of the FDF will relocate to GSFC Building 25 (SOC), where the SMM has relocated. FDF personnel will maintain a printout of the most current Space Shuttle state vectors which can be utilized to provide GN station acquisition assistance.

7.6.2

In the event that the GSFC FDF facilities in Building 28 have to be evacuated, the ND will (under these conditions) advise the DOD Track at Cape Canaveral that the FDF is no longer available for generating acquisition data for the DOD and GN stations. ER/ROCC will be requested to provide acquisition data to these stations. FDF personnel will maintain a printout of the most current Space Shuttle state vectors which can be utilized to provide GN station acquisition assistance, if required.

NOTE

ER/ROCC has requested a 2-hour advance notification of required support.

7.6.3

FDF will transmit IIRVs during on-orbit support to the GN and AFSCN/RTS stations. If ER/ROCC is required to provide this data (due to an FDF outage), it will be in the form of IRVs.

Table 7-1. Space Shuttle Station Identification (1 of 4)

Location (1)	Description	NASA ID	FDF ID	INP Line 1 (2)	TDS Rout Indic (4) & Table 7-4 Item No.	INP Data Point Interval	DOD ID (5)	JSC ID (5)
C-band Antennas								
AFFTC, EAFB, CA (3)	FPS-16	4065	EA2F	W42	GAFT & Item 1	15 sec	R-41	EFFC
Antigua Island	FPQ-14	4087	ANTQ	E91	GANT	5 sec	91.14	ANTC
Ascension Island	FPQ-15	4045	ASCQ	E70	GASC	5 sec	12.15	ASCC
Ascension Island	TPQ-18	4765	AS2Q	E10	GAST	5 sec	12.18	ASTC
Cape Canaveral (3)	MPS-39	4223	CN5F	E05	GSBN	10 sec	1.39	CMTC
Cape Canaveral (3)	FPS-16	4041	CNVF	E65	GCVL	20 sec	1.16	CNVC
DFRC, CA (3)	RIR 716	4069	FRCF	W43	GFRC & Item 3	30 pt	R-34	FRCC
DFRC, CA (3)	RIR 716	4064	EAFF	W39	GAFT & Item 1	15 sec	R-38	FDRC
Kaena Point, HI	FPQ-14	4282	KPTQ	P68	GKPT GTEC GADS	30 sec	KPT-14	KPTC
Kwajelein Island	TRADEX	4968	KMRF	P02	GKMR	10 sec	TRADEX	KMLC
Kwajalein Island	ALCOR	4969	KMRQ	P69	GKMR	10 sec	ALCOR	KMRC
Kwajalein Island	ALTAIR	4971	KM2F	P92	GKMR	10 sec	ALTAIR	KMAC
Kwajalein Island	FPQ-19	4970	KMRT	P74	GKMR	10 sec	KWAJ-19	KMTC

Table 7-1. Space Shuttle Station Identification (2 of 4)

Location (1)	Description	NASA ID	FDF ID	INP Line 1 (2)	TDS Rout Indic (4) & Table 7-4 Item No.	INP Data Point Interval	DOD ID (5)	JSC ID (5)
C-band Antennas (cont)								
Merritt Island, FL	FPQ-14	4084	MLAQ	E71	GMLA	10 sec	19.14	MLAC
Merritt Island, FL (3)	MCB-17	4220	MIMF	E67	GKRC	20 sec	19.17	MLMC
Patrick AFB, FL	FPQ-14	4060	PATQ	E21	GPAT	10 sec	0.14	PATC
Point Pillar, CA	FPQ-6	4260	PPTQ	W46	GPTP GTEC GADS	30 sec	PTP-Q6	PTPC
Point Pillar, CA (3)	MPS-36	7399	PP2F	W25	GMPS GTEC GADSC	30 sec	PTP-36	PPMC
Vandenberg AFB (Tranq Pk), CA (3)	FPS-16	4018	CALF	W47	GFPS GTEC GADS	30 sec	SN21	VDSC
Vandenberg AFB (Tranq Pk), CA (3)	FPS-16	4241	CA2F	W49	GVBG GTEC GADS & Item 13	30 sec	SN18	VDFC
Vandenberg AFB, CA	TPQ-18	4280	CALT	W48	GVNB GTEC GADS	30 sec	TPQ-18	VDBC
Vandenberg AFB, CA	HAIR	4247	VD2F	W76	GFPQ GTEC GADS	30 sec	HAIR	VDHC
Vandenberg AFB, CA	MPS-39	4251	VD3F	W73	GVMO	30 sec	MOTR	VDMC
Wallops Flight Facility, VA	FPQ-6	4860	WLPQ	Z86	GBIW	30 pt	WLPS-Q6	WLPC
Wallops Flight Facility, VA (Airport) (3)	FPS-16 (A)	4841	WL2F	Z52	GWAC	30 pt	WLPS-16V	WLRC
Wallops Flight Facility, VA (Island) (3)	FPS-16 (IS)	4840	WLPF	Z53	GRIW	30 pt	WLPS-16	WLIC
White Sands, NM (3)	FPS-16	4143	WHSF	W07	GDWS & Item 8	5 sec	R113	WHSC
White Sands (Stall Sta) NM (3)	FPS-16	4145	WH6F	W29	GDWS & Item 8	5 sec	R127	WSSC
White Sands (Holloman) NM (3)	FPS-16	4144	HOLF	W61	GDWS & Item 8	5 sec	R123	HOLC
White Sands NM	MPS-39			W7	GDWS & item 8	5 sec	MOTR	WSMC

Table 7-1. Space Shuttle Station Identification (3 of 4)

Location (1)	Description	NASA ID	FDF ID	INP Line 1 (2)	TBS Rout Indic (4) & Table 7-4 Item No.	INP Data Point Interval	DOD ID (5)	JSC ID (5)
S-band Antennas								
Alamo Peak, WSMR, NM	7.3M, AZ-EL	1707	ALAY	W72	GWDS & Items 2, 8	5 sec		WSMS
Atom Peak (N Oscurra Pk), NM (3)	7.3M, AZ-EL	1708	ATMY	W62	GWDS & Items 2, 8	5 sec		N/A
Colorado Springs, CO	10M, AZ-EL	1756	CTSS	A51	GSLE	16 sec		CTSS
Diego Garcia	10M, AZ-EL	4073	DGIS	A69	GSLE	16 sec		DGSS
Dryden, DFRC, CA	7M, AZ-EL	4067	DFRS	S89	GFRC	30 pt		DFRS
Dryden, DFRC, CA	7M, AZ-EL							
Goldstone, CA	9M, X-Y, N-S	1327	DS17	D17	GYSS	30 pt		GDSS
Goldstone, CA	26M, X-Y, E-W	1312	DS16	D16	GYSS	30 pt		GDXS
Jonathan Dickinson, FL (3)	85ft, AZ-EL	1817	JDIY	E20	GTJD	5 sec		N/A
Jonathan Dickinson, FL (3)	50ft, AZ-EL	1818	JD2Y	E20	GTJD	5 sec		N/A
Guam	18M, AZ-EL	1375	GT2S	A64	GSLE	16 sec		GTSS
Keana Point, HI	18M, AZ-EL	1373	HT2S	A35	GSLE	16 sec		HTSS
Merritt Island, FL	9M, X-Y, N-S	1301	MIL3	S71	GYMM	30 pt		MILS
Merritt Island, FL	9M, X-Y, E-W	1901	MIL	S40	GYMM	30 pt		MLXS
New Boston, NH	14M, AZ-EL	1374	NH2S	A37	GSLE	16 sec		NHSS
Oak Hangar, UK	18M, AZ-EL	1364	OTSS	A95	GSLE	16 sec		OTSS
Point Pillar, CA	12M, AZ-EL	4216	PPTY	W45	GPTP, GTEC	30 sec		PTTS
Ponce de Leon Inlet, FL (3)	4M, AZ-EL	4054	PDLS	S38	GPDL, GYMM	30 pt		PDLS

Table 7-1. Space Shuttle Station Identification (4 of 4)

Location (1)	Description	NASA ID	FDF ID	INP Line 1 (2)	TDS Rout Indic (4) & Table 7-4 Item No.	INP Data Point Interval	DOD ID (5)	JSC ID (5)
S-band Antennas (cont)								
Vandenberg, TRS, CA	10M, AZ-EL	1835	CALY	W04	GSVB, GTEC, GADS	10 sec		VDTS
Vandenberg, CA	14M, AZ-EL	1372	VT2S	A06	GSLE	16 sec		VTSS
Wallops, VA	9M, X-Y, EW	1334	WPS A	S04	GYFF	30 pt		WLPS
Optical Camera								
Maui, HI	Camera	7398	MA2C	PO1	GMOT, GTEC, GADS	30 pt		
Santa Ynez Peak, CA	Camera	0624	SYNC	W90	GSYP, GTEC, GADS	5 sec		
Tranquillon Peak, CA	Camera	0625	CALC	W67	GVLO, GTEC, GADS	5 sec		CALO

NOTE

1. NASA Directors of Station Locations (NDSOL), prepared by GSFC Code 453.2.
2. Tracking and Acquisition Handbook for the STDN, STDN No. 724.
3. These stations will receive acquisition data during launch/landing support only. Launch acquisition data transmissions may continue during first three revolutions. Landing acquisition data transmissions start at WOW minus 24 hrs.
4. DOD and Wallops acquisition data will also be sent to GRCC and GCNV.
5. The JSC and DOD IDs are the responsibility of their respective centers.

Table 7-2. Prime Acquisition Message Distribution by Mission Phase (1, 2, 3)

Agency	Premission		Real-time (4)		
	Nominal (5)	Contingency	Onorbit (7)	Maneuver (7)	Entry
GN	INP	INP	IIRV (13)	INP (8)	INP (11)
DOD C-band	INP	INP	IRV	IRV ig & IRV co (12)	INP
AFSCN (RTS) (Note 3)	INP	INP	IIRV (13)	IIRV (10) (13)	INP
WLPS C-band	INP	INP	IRV	INP (9)	INP
DOD S-band	INP	INP	NA	INP	INP

NOTE

1. INPs contain 2-3 points preceeding 0 degrees elevation (AOS) and following 0 degrees elevation (LOS).
2. Masking or refraction is not included in INPs.
3. All INPs except GT2S, HT2S, NH2S, TT2S, DG2S and VT2S will contain range. Range units are kms.
4. Real-time transmission is to begin at approximately T plus 25 minutes.
5. 150 minutes of nominal data will be transmitted.
6. The channel identification field will contain the contingency trajectory code.
7. IIRVs and IRVs will contain the epoch of the JSC ICV.
8. If ignition is after AOS, site will also receive an hourly IIRV.
9. If ignition is after AOS, site will also receive an hourly IRV.
10. (a) If ignition is after AOS, site will receive an hourly, ignition, and cut-off IIRV (AFSCN).
    (b) If ignition is prior to AOS, site will also receive an ignition and cut-off IIRV (AFSCN).
11. INPs sent to MIL for landing phases are converted to antenna pointing data at MIL for MIL and for transmission to KSC runway cameras.
12. IRV ignition and cutoff.
13. ER generates IRVs (refer to paragraph 7.7).

Table 7-3. Contingency and Landing Acquisition Data Trajectory Codes

(To be supplied by ISI on mission-by-mission basis.)

Table 7-4. Ground Network Facility Vehicle Contingencies

Mission Phase	Launch		AOA		
Down Facility	RTLS	TAL	before update from JSC	after update from JSC	before receipt landing set
JSC/EMCC	ROCC LTAS or D-tape nominals	N/A	D-tape nominals	updated landing maneuver sequence	
NCC	N/A	N/A	N/A	N/A	N/A
NISN	ROCC LTAS or D-tape nominals	N/A	D-tape nominals or JSC voice out selected parameters to East or West coast sites		JSC voice out selected parameters to East or West sites
FDF	ROCC LTAS or D-tape nominals	N/A	D-tape nominals or JSC voice out selected parameters to East or West coast sites		ROCC to update GN sites via TTY
NCC NISN FDF	ROCC LTAS or D-tape nominals	N/A	D-tape nominals or JSC voice out selected parameters to East or West coast sites		JSC voice out selected parameters to East or West sites

Key: N/A - Not Applicable

Table 7-5. Ground Network Facility Contingencies

Site of the Contingency Listed Below	Launch (before L-31 sec.)	Launch (after L-31 sec.)	On-orbit	EOM Landing (before receipt landing set)
JSC	Hold	L-2 hours postascent and post-OMS-2	post-OMS-2 on-orbit propagated or FDF OD	None
NCC	Hold	N/A	N/A	N/A
NISN	Hold	L-2 hours postascent and post-OMS-2 or ROCC DOD update	JSC to ROCC via 56 kb/sec direct line AUTODIN update DOD sites only - GN by voice	JSC voice out selected parameters to East or West coast sites
FDF	Hold	L-2 hours postascent and post-OMS-2 or ROCC DOD update	ROCC to update all GN and DOD sites via NISN TTY	ROCC to update all GN and DOD sites via NISN TTY
NCC, NISN, FDF	Hold	L-2 hours postascent and post-OMS-2 or ROCC DOD update	JSC to ROCC via 56 kb/sec direct line AUTODIN update DOD sites only - GN by voice	JSC voice out selected parameters to East or West coast sites

Key: OD - Orbit Determination
N/A - Not Applicable

Section 8. Communications

8.1 General

8.1.1 Introduction

8.1.1.1

NISN provides all NASA Mission Control and NCCs with real-time operational communications to launch sites and remote tracking, data acquisition, and command stations. These communications are for premission spacecraft launch checkout; mission and network simulations; operational support of launch, earth orbital, and deep space phases of missions including attitude and trajectory determination; command and control of spacecraft; control and scheduling of network stations; and where involved, data distribution to experimenters and spacecraft development contractors.

8.1.1.2

Certain supporting contractor sites and other agencies or organizations who participate in, or otherwise support NASA or cooperative spaceflight programs, are linked via NISN when their activities are closely related to the operational aspects of missions.

8.1.2 NISN Systems

NISN provides an operational global communications system of diversely routed voice, low-speed, high-speed, and wideband data communications channels, with switching and technical control facilities. NISN circuits are full-period channels, leased from domestic and foreign common carriers on a worldwide basis. A variety of voice, data (digital), and television services are provided. For mission-unique requirements, temporary circuits are sometimes used to meet short-term requirements.

8.1.3 NISN Data Systems

These digital data facilities have been implemented in a variety of ways depending on locations, overseas considerations, and the carriers concerned. Overseas channels have been implemented via communications satellite and fiber optic systems which include the earth stations of the foreign and U.S. Satellite systems. Foreign end-segments are served by terrestrial cable, fiber optics, satellite and microwave facilities. The U.S. end-segments are implemented using terrestrial and Domestic Satellite (DomSat) facilities, and other specialized communications carriers.

8.1.4 Voice Systems

8.1.4.1 General

NISN provides a system of full-period operational voice circuits to all NASA tracking and data acquisition stations and most other terminal points in NISN. NISN switching center at the Jet Propulsion Laboratory (JPL), Pasadena, CA provides for area switching and conferencing of the Deep Space Network (DSN), thus minimizing the number of long-haul trunks. NISN Voice Control personnel at GSFC provide for all voice interconnects in the network except as noted in paragraph 8.2.3.

8.1.4.2 PDL T-1/Voice Communications for Space Shuttle Support

One leased T-1 circuit and two leased voice circuits (to support A-G UHF) are provided to the PDL site located at the Ponce de Leon inlet (near New Smyrna Beach, FL), for data/voice distribution to GN MIL station. The T-1 is used to transmit S-band information, as received at PDL, to MIL for processing and further transmission to JSC/MCC via GSFC. The T-1 is used to transmit a composite signal containing CMD and other required data to PDL for uplinking to Space Shuttle. Additionally, the T-1 has a dedicated channel to use as the third PDL A-G UHF interface in the event the two primary lines fail. Three voice/data circuits are included in the composite T-1 for coordination of activities between PDL and MIL (see Figure 8-1). (Note: the Central Data Swiching Center (CDSC) is the distribution point for data exchance between MIL and PDL.)

8.1.4.3 Voice Coordination

a. Voice circuits are provided for coordination between JSC/MCC, GSFC/NCC, GN stations, Space Network (WSC), and other activities supporting the Space Shuttle program. These circuits allow the JSC/MCC and GSFC/NCC to coordinate operational matters with STDN and other support agencies. These circuits also allow the JSC/MCC to remotely key and modulate UHF A-G equipment at the A-G UHF Space Shuttle support stations. A minimum of three voice circuits is provided to each station except the WSMR. One circuit serves as voice coordination between the JSC/MCC and the station. The other two circuits serve as prime and backup operational support circuits between the JSC/MCC and the Space Shuttle. The WSMR does not have a voice coordination circuit. It has a prime and a backup UHF A-G circuit. UHF A-G communication with the Space Shuttle via the ground stations is as follows:

    1. JSC/MCC will generate quindar tone keying for UHF A-G Voice Equipment (AGVE) support at MILA, WPS, and OTS via GSFC.

    2. JSC/MCC will generate quindar tone keying for UHF AGVE support at WSMR.

    3. JSC/MCC will generate Ear and Mouth (E&M) keying for UHF AGVE at DFRC via a direct circuit interface.

b. Voice, Switching, and Conferencing. Voice, switching, and conferencing of GSFC-interfaced voice circuits is accomplished by JSC/GSFC Voice Control.

c. Voice Circuit Descriptions. Voice circuit descriptions are listed in Table 8-1.

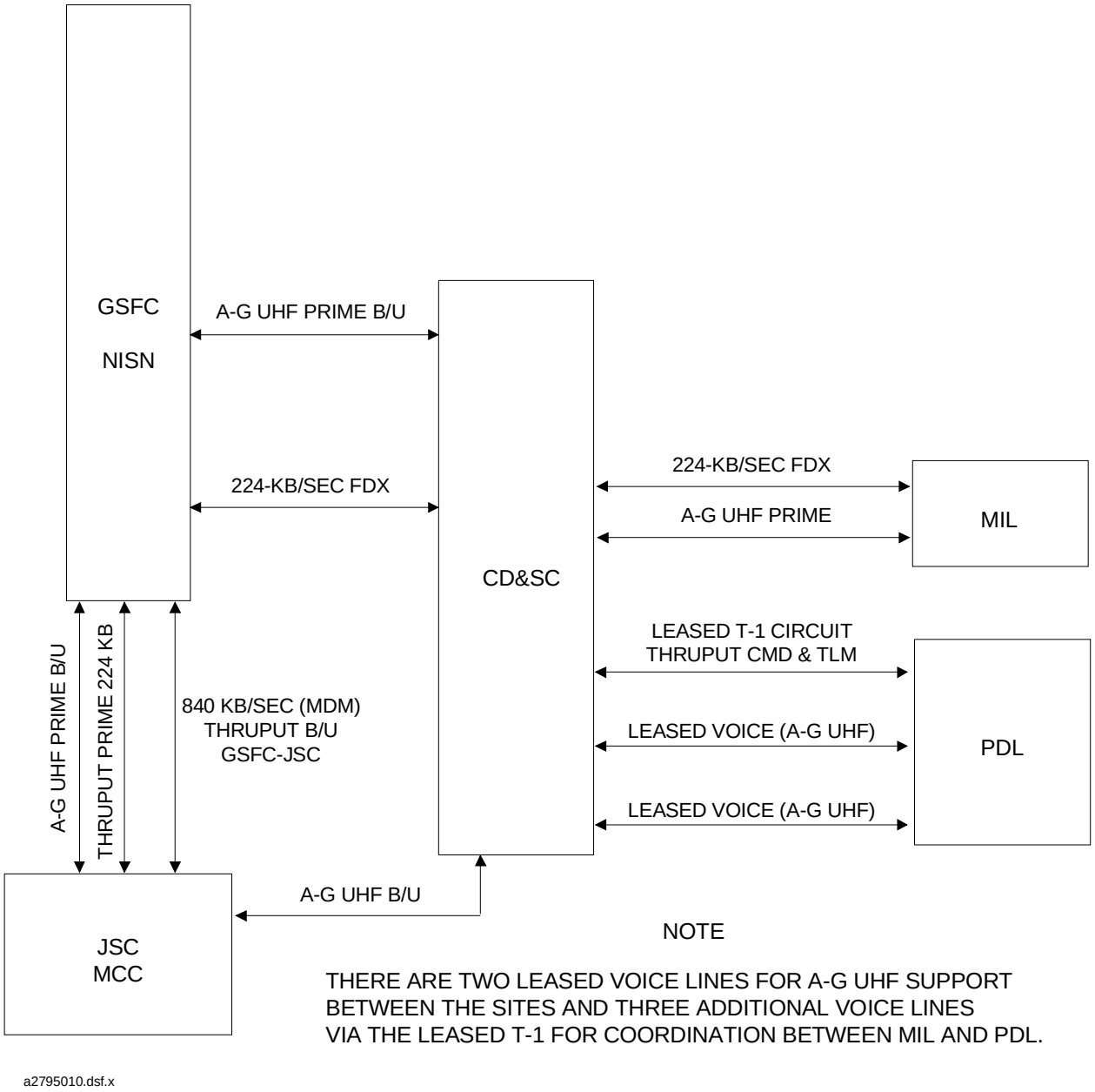

Figure 8-1. Space Shuttle PDL Station Communications

Table 8-1. Space Shuttle Voice Circuit Description (1 of 4)

Voice Circuit	Description
A-G 1	The A-G 1 circuit is provided between GSFC and all supporting GN stations. These circuits are extended from GSFC NISN Voice Control to MCC via voice/data quality circuits. This circuit is used primarily by flight crew members for S-band A-G communications with MCC.
A-G 2	The A-G 2 circuit fulfills the same basic functions as A-G 1. MIL and WPS stations have UHF A-G capability in addition to S-band capability. OTS, DFRC, and WSMR have UHF A-G capability only. The A-G circuit is normally used for UHF A-G communications, and during orbital support can be used for TIPS/ PADM operations.
GSFC-to-JSC A-G 3/A-G 4	Two circuits between GSFC Voice Control and Houston Com Tech. These circuits will function as A-G backup circuits to A-G 1 and A-G 2. Functional use will be prepass A-G com checks conducted by the Houston Com Tech. STDN stations normal A-G 1 and A-G 2 will be removed from the A-G conferences and extended to JSC on A-G 3 and A-G 4 for these checks. Secondary functions are for use in private A-G configurations. Configuration of these circuits will be coordinated by Houston Com Tech and GSFC Voice via the GSFC/JSC com order wire.
JSC-to-MIL	Used for A-G delay verification circuits. MIL strips out the S-band uplink from the DMS and puts it on MIL Delay Verify 1 Circuit. MIL puts UHF on MIL Delay Verify 2 Circuit. JSC compares the two and adjusts accordingly (prelaunch through MIL LOS only). This can also be used to backup MIL A-G (V1 and V2).
MISSION COM COORD	The MISSION COM COORD circuit is provided between MCC Com Controllers, Com Tech, KSC CDSC, Cape Com Controller (ER), MIL. MCC patches to DFRC during all phases for KSC/CDSC coordination with DFRC.
LEAD RANGE COORD	Used for the management of Space Shuttle operations during launch and on-orbit support by GSFC Ops/NOM/Cape DOD TRACK.
JSC A-G 1	The JSC A-G 1 circuit is provided as a direct line between JSC and MIL. This circuit is used for extension of the KSC ASTROCOM A-G 1 circuit to JSC via MIL for throughput operations. The circuit is equipped with E&M signaling.
JSC A-G 2	The same as JSC A-G 1, except it extends the KSC ASTROCOM A-G 2 circuit.
JSC A-G 3	Backup for the JSC A-G 1.
JSC A-G 4	Backup for the JSC A-G 2.
Convoy Commander Net	The Convoy Commander Net is used for overall operational coordination and contingencies; e.g., status and coordination of the following: Test Director Safety, Fire, Crash and Rescue, Security, Airfield Coordination, and Local Manager Coordination (DFRC). The Net is extended from the landing field at DFRC for KSC to the LCC. The Net controls all convoy vehicle movements.
Cooling Net	The Cooling Net is dedicated to LCC cooling unit coordination. Also used as backup to the Convoy Commander Net.

Table 8-1. Space Shuttle Voice Circuit Description (2 of 4)

Voice Circuit	Description
Flight Director	The prime Flight Control circuit on which all Flight Controllers input to the Flight Directors.
GOSS 8	The GSFC Com Manager circuit is provided for coordination Manager between the Houston Voice, Com Tech, GSFC Com Manager, Houston Com Control, and GSFC Voice Control. Talk on this circuit is restricted to communications personnel.
MCC Coordination Loop	An interface loop for coordination between MCC and remote Loop payload control centers for the purpose of real- time/playback CMD and TLM operations; the loop is also used for verification and data quality troubleshooting.
Prime Operations Loop	Mission operations loop for CMD requirements interface, timeline coordination, and contingency identification and recovery.
Program Managers Loop	Intended for programmatic information and directives between management levels at supporting centers.
MIL GCN-1	The MIL GCN-1 circuit is used by KSC to monitor conversations (A-G 1) involving the A-G nets. This circuit is monitor-only for A-G S-band or UHF conversations between the flight crew and control centers during flight.
MIL GCN-2 (A-G 2)	Same as GCN-1.
GSFC ODF COORD	The GSFC FDF circuit is provided for ICV data coordination between the MCC, GSFC, and Cape computers.
GC/NOM	The (GC/NOM) circuit provides for coordination between the MCC GCs and GSFC/WSC.
Intra-site I/C	The Intra-site Intercom is an extension of communication circuits between MIL and PDL for simultaneous launch support coordination and operations.
JSC/MIL O/W	This circuit is used for Com Tech coordination with MIL A-G support elements. KSC CDSC is also a participant of this loop.
KSC/DFRC Net 1 Net 4	These circuits are for KSC Operational Intercommunications System (OIS) interface and are required at landing minus two hours. No longlines are assigned as other longlines used during launch will be free. DFRC to extend to Mating-Demating Device (MDD) Shuttle Processing Area (SPA)-OIS-A.
Landing Field Prime 1	Two longlines, one at KSC and extended to CCAFS and another to DFRC for simultaneous landing support coordination and information exchange between the MCC and the local Airfield Support Coordinator's (AFSC) at KSC and DFRC.
Landing Field Prime 2	As required during overload of Landing Field Prime 1.

Table 8-1. Space Shuttle Voice Circuit Description (3 of 4)

Voice Circuit	Description
LLTDS COORD	Coordination of operational data flow and testing between JSC and ER during launch/landing activities when using the LLTDS network.
Scheduling COORD	The Space Shuttle scheduling circuit is used for coordination of Space Shuttle schedules involving JSC, GSFC, KSC, ER, WR, MIL, and WSMR. Schedule coordination with WFF and AFFTC will be accomplished via AMS circuits.
Shuttle Support	Connects the STS Operations Support Center (SOSC) at OAS to MCC-H used to coordinate all AFSCN/RTS support of the SSO. This circuit is extended to GSFC.
Simulations/ Operations Loop	For premission conversation between centers for the purpose of coordinating integrated simulation activities. During the mission it may be used as a second operations support loop.
SITE COORD	Site coordination is provided to stations and other supporting centers, as required, for coordination between MCC, NCC, and GN stations and as the NISN orderwire to the stations. This circuit will also function as the stations' Playback COORD circuit. Refer to Playback COORD description.
Surgeon	Two longlines, one each to KSC and DFRC, for coordination of medical data and disseminating the surgeon's assessment of flight crew health. Distribution to DFRC dispensary.
TRACK COORD	DOD and NISN circuits are used to join MIL, FDF, WFF, and Goddard Track; JSC/MCC; WR RCC (responsible for coordination of Vandenberg, Point Pillar, Kaena Point radars); USAKA Range Control (responsible for Kwajalein radars); AFFTC (responsible for coordination of AFFTC radars); and DFRC radar; ER (responsible for coordination of CNV, MLA, PAT, JDI, ANT, and ASC radars); White Sands Missile Range Controller (responsible for WSMR radars); and DOD Lead Range Control Center (responsible for overall coordination of DOD range support).
TV Conference	The television conference circuit is used for TV coordination between video support locations at JSC, GSFC, KSC, DFRC, WSC, MSFC, WR, and MIL. The circuit will also be extended to individual domestic satellite earth stations at JSC, GSFC, KSC, DFRC, and MIL and used for coordination when these earth stations are participating in Space Shuttle TV transmissions (see Figure 8-13).
GSFC/MSFC COORD	Coordination circuit between GSFC, NOM, MSFC Data, and MIL/STDN, used for data bit rate changes and confirmation of data receipt. Also, extended to Goddard Com Mgr and Tech Control to allow them to follow bit rate changes and provide technical troubleshooting access with MSFC.

Table 8-1. Space Shuttle Voice Circuit Description (4 of 4)

Voice Circuit	Description
MIL A-G	The STDN station at MIL has MIL-to-JSC A-G longline circuits provided for use in prelaunch, launch, and orbital support of Space Shuttle and extension of A-G V1 and V2 to JSC.
Mission Audio	Mission Audio is a full-time programmed circuit containing Public Affairs Office (PAO) commentary, all crew communications, and tape playbacks.
NCC I/F COORD	NCC Interface Coordination is provided from NCC to GN stations for coordinating the first 15 minutes of the H-30 minus count activities (AFSCN H-30 to H-15). At H-30, this activity is switched over to the SITE COORD.
NASA TEST DIRECTOR (NTD) (OIS 133)	Used by the NASA Test Director for overall integrated activities associated with Orbiter preparation for the prime mission. May also be used for intercenter/ agency coordination when other centers participate in KSC activities.
Operations Support Loop	Coordination loop for technical information related to systems anomalies, state vector support, Orbiter operational data, and command configuration interfaces.
PAO CUE	Used to cue the release of audio and video materials on PAO release circuits.
PAO Engr	Used to troubleshoot PAO audio problems, as a backup and supplement to PAO CUE. Also is shared for coordination of television releases. (See Figure 8-9.)
PLAYBACK Circuits 1 through 4	Four circuits between GSFC Voice Control and Houston Com Tech that will be configured for postpass playback of A-G voice dumps. Postpass configuration of these circuits will be coordinated between Houston Voice and GSFC Voice Control via the GSFC/JSC Com orderwire.
WSC P/B COORD	COORD loop for STS PIBs between JSC/WSC/GSFC/MSFC - Also used for other support.

8.1.5 Tracking Data Systems

a. The Tracking Data System (TDS) is utilized for the transmission of acquisition data to Shuttle support locations and for the transmission of low-speed tracking data from those stations to Goddard. At GSFC, low-speed tracking data is blocked and transmitted to JSC (see Figures 8-11 through 8-14).

b. One duplex 1200 baud circuit is provided direct between GSFC and the WR Switching System (OTSS). One duplex 110 baud (8-level) ASCII AMS circuit is also provided between GSFC NISN and the OTSS. (See Figure 8-2.)

c. Four duplex 300 baud ASCII AMS circuits are provided between GSFC NISN and the ER XY Building. One duplex 1200 baud ASCII TDS circuit is also provided between GSFC NISN and the ROCC Digital Message Network Element (DMNE). One simplex 1200 baud ASCII AMS circuit is provided between GSFC NISN and the WSMR computer in Building 300. One GN AMS circuit is used for acquisition data/tracking data. The WR, USAKA, and ER AMS circuits are also used for acquisition data/tracking data.

8.1.6 Video System

The Space Shuttle video network consists of two DomSat transponders provided on a full-time basis. Temporary video channels are also leased as required (refer to paragraph 8.2.9.3).

8.1.7 Meteorological Interactive Data Display System

a. The Meteorological Interactive Data Display System (MIDDS)-II is a complex, highly interactive, hardware and software system based on an imbedded computer designed to acquire, monitor, store, retrieve, reformat, manipulate, and display weather-related data. It will enable a forecaster to build a display base by blending satellite and conventional data obtained from a variety of sources into a visual format through interactive manipulation.

b. The Wallops Flight Facility (WFF), Wallops Island, VA, supports the MIDDS by receiving Meteosat data, blocking the data, and retransmitting it in Nascom 4800-bit block format to JSC via a 224-kb/sec circuit.

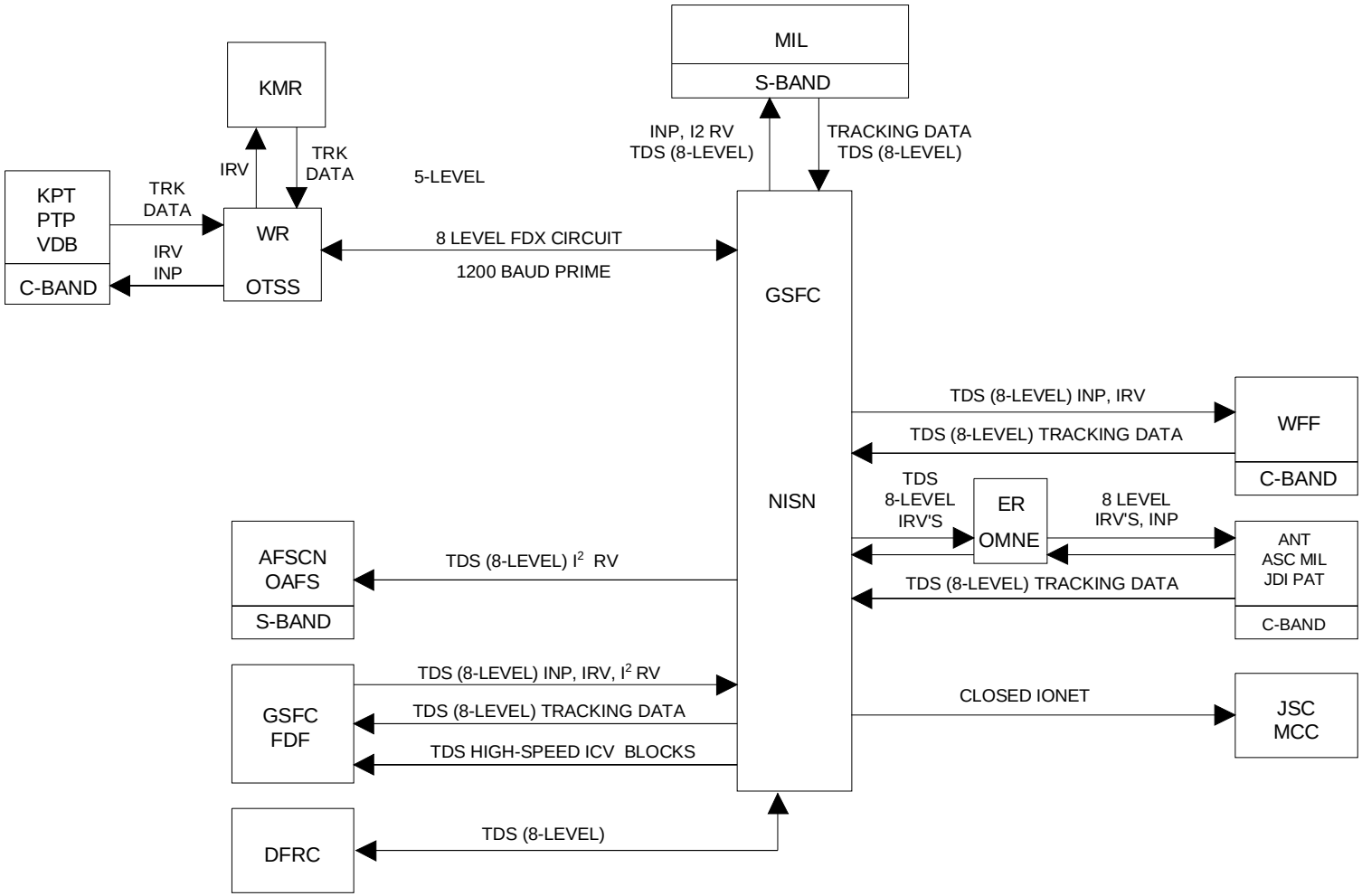

NOTE

GSFC NISN CONVERTS ALL C-BAND AND S-BAND ON-ORBIT TRACKING DATA (TDS) RECEIVED FROM ER/WR/USAKA/STDN AND WFF TO 4800-BIT BLOCKS PRIOR TO TRANSMISSION TO JSC VIA 840 KB/SEC CIRCUIT.

a2795011.dsf.x

Figure 8-2. Space Shuttle Orbital Phase Acquisition and Tracking Data System

c. The JSC weather station is located in Building 30 and operated by the National Oceanic and Atmospheric Administration (NOAA) for NASA. This station receives weather data from various locations (i.e., Wallops, Cape Canaveral Air Station (CCAS), MSFC, Edwards AFB, etc.), processes the data, and makes if available to the station forecasters in support of Space Shuttle missions (launch through landing). The JSC weather station is the focal point of the entire MIDDS system.

8.1.8 Transoceanic Abort Landing Communications

8.1.8.1

NISN provides voice circuitry for Transoceanic Abort Landing (TAL) Communications between JSC, KSC, GSFC, and the Inmarsat earth station at Southbury, Connecticut. These circuits allow the TAL sites to provide STS support. Three TAL sites are available for support. A maximum of two sites support each launch. The sites are:

a. Ben Guerir, Morocco.

b. Banjul, Gambia.

c. Moron Air Base, Spain.

d. Zaragoza Air Base, Spain.

8.1.8.2

Each TAL site has the capability of providing three voice circuits which are conferenced at the Southbury earth station then extended to GSFC for extension to KSC and JSC.

NOTE

See Figure 8-3 for TAL voice circuit distribution.

8.2 Operations

8.2.1 General

The Internet Protocol Operational Network (IONET) is operated by the Consolidated Space Operations Contract (CSOC) for the NISN Wide Area Network (WAN) Project Office and the NISN Local Area Network (LAN) for the Information Services and Advanced Technology Division (Code 290). The Shift Communications Manager (SCM) exercises 24-hour a day, 7 day a week network control on behalf of the CSOC NISN Operations and Maintenance Manager.

8.2.2 Documentation

Operation of the legacy NISN network is in accordance with the NASA Communications Operating Procedure (NASCOP), 542-006. NASCOP describes procedures to be followed by all users. It contains instructions to message originators and communications personnel; message format breakdown; message examples; circuit parameter information; voice operations procedures; and other items of a similar nature on high-speed data, wideband, and voice/analog procedures. Any deviations from or changes to NASCOP will be issued by the Com Mgr.

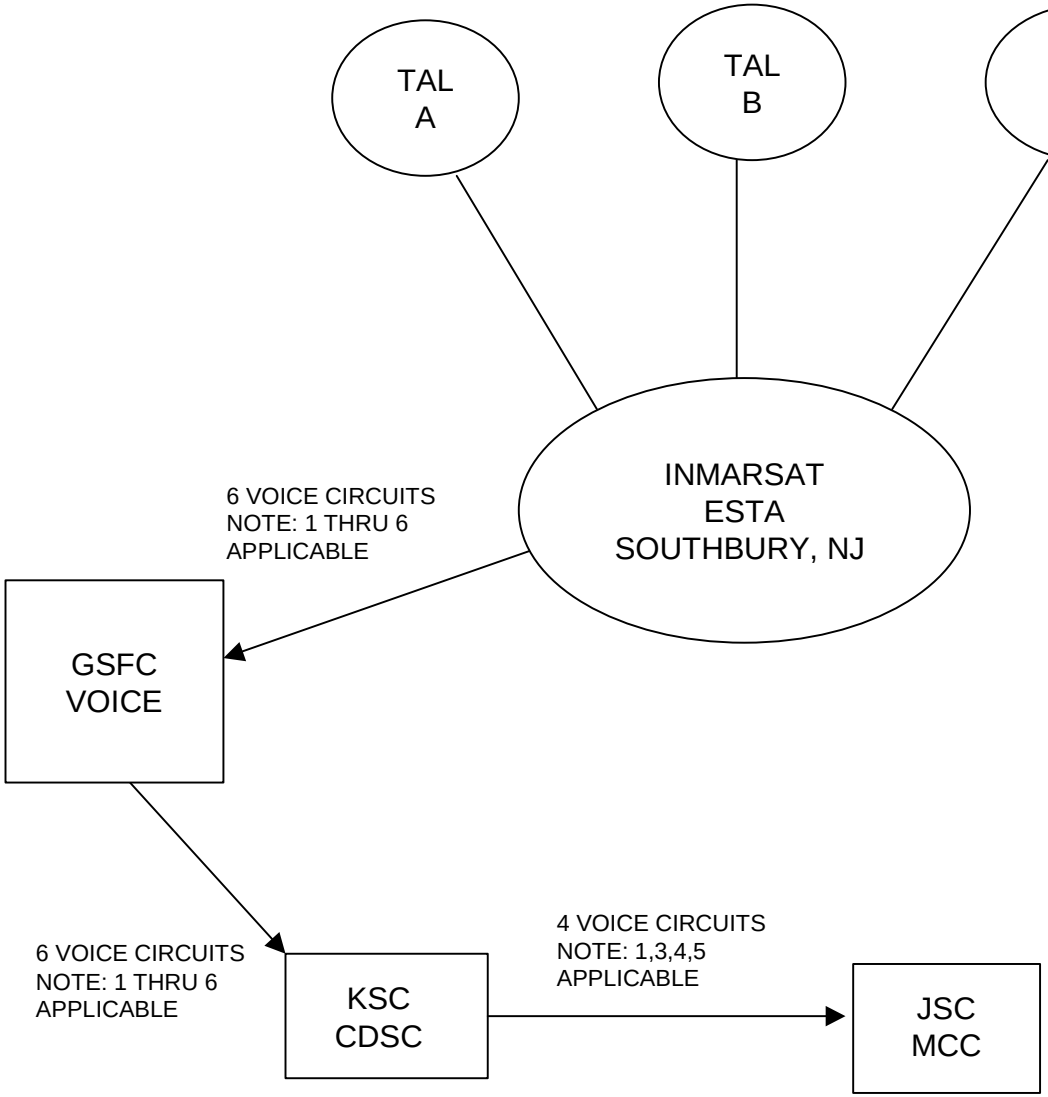

a2795002.ppt

TAL SITES

1. BEN GUERIR, MOROCCO
2. BANJUL, GAMBIA
3. MORON AIR BASE, SPAIN
4. ZARAGOSA AIR BASE, SPAIN

NOTES

VOICE CIRCUITS

1) MISSION COMM COORD
2) INMARSAT COORD
3) TAL WEATHER OBSERVER
4) TAL AIRCRAFT/ORBITER
5) TAL LANDING FIELD (PRIME 1)
6) TAL STATUS

Figure 8-3. TAL 4-Wire Voice Circuit Distribution

8.2.3 NISN Communications Manager

The Com Mgr exercises control over the mission-critical network. This network provides redundant capabilities, better restoration time, and better performance. However, in some cases, for reasons of economy, workload, and responsiveness, GSFC has delegated these responsibilities to other NASA field installations for certain operational point-to-point systems within the U.S., such as JPL Switching Center extending communication lines to the DSN for support.

8.2.4 NISN Network Scheduling Group

The GSFC NISN Network Scheduling Group (NNSG) is responsible for the communications scheduling of the GSFC portion of NISN. This includes scheduling of existing circuitry implemented for a given mission or project. All network resources are available during contingencies or emergencies on a real-time basis through appropriate coordination with the Mission Communications Manager (MCM), who is responsible for support of STS communications from L-48 hours through landing plus one hour or the SCM, who is responsible for the daily operations and support of network activities 24x7, 365 days a year.

8.2.5 Operations Tests

Operations tests using the designated NISN circuitry are scheduled through the NCC, NNSG, MCM, or as outlined in mission launch count procedures and/or briefing messages.

8.2.6 Communications Configurations

Prior to mission and mission simulations, the MCM transmits, via a message, a communications network configuration for each connecting station or terminal as applicable. These configurations apply on receipt and are binding unless otherwise changed or rescinded. The MCM or Tech Control may direct rearrangements by message or voice in real time. For a given location, special instructions concerning alternate circuits or routing may be included.

8.2.7 Operational Failures or Deficiencies

Operational failures or deficiencies in NISN as noted by their operational elements, the STDN, control centers, or terminal locations are reported to the Com Mgr as appropriate. For example, all troubles at GSFC on Switching, Conferencing, and Monitoring Arrangement (SCAMA) voice lines, Closed Conference Loops (CCLs), and consoles should be reported to GSFC Voice Control directly on 301-286-8737. Should other locations delegated to perform the configuration and troubleshooting functions on circuits that do not pass through GSFC have problems with the respective carriers, they should notify the GSFC Com Mgr for assistance. The SCAMA or CCL number, and the phone number and initials of the person reporting the trouble, must be included. If a prime circuit, backup, or SCAMA fails, other means of comm. such as telephone should be used. A station, control center, or terminal location should immediately attempt to contact the GSFC Com Mgr at 301-286-6141 or 301-286-6577.

8.2.8 IP Network

8.2.8.1 General

Existing 4800-bit block services are provided by encapsulating 4800-bit blocks in IP/User Datagram Protocol (UDP)/Real-time Transport Protocol (RTP) datagrams using NISN-provided Conversion Devices and Routers. Modified Multiplexers/Demultiplexers (MDMs) are used at WSC and JSC to convert SN data to and from the IP infrastructure. The NISN IP backbone is an INTRANET using Commercial Off-the-Shelf (COTS) equipment and is not connected to the Open Internet except through firewalls. Figure 8-4 illustrates the network. A complete set of documentation on the NISN IP Transition Network can be found on the GSFC NISN home page. Catalog information on service provided by NISN can be found on the MSFC home page. The NISN URLs are listed below:

a. GSFC: http://skynet.gsfc.nasa.gov/

b. MSFC: http://www.nisn.nasa.gov/

8.2.8.2 Internet Protocol

The Internet Protocol (IP) is designed for use in inter-connected systems of packet-switched computer communication networks. The IP implements two basic functions: addressing and fragmentation. Internet software uses fields in the Internet header to fragment and reassemble Internet datagrams when necessary. Two key parameters in the Internet header are Time to Live and Header Checksum. The Time to Live parameter determines how many hops the datagram is allowed to make before it is destroyed. The Header Checksum provides a verification that the data was transmitted correctly. If the header checksum fails, the Internet datagram is discarded at once.

NOTE

IP Class B (HOST) and Class D (Multicast) addresses are sensitive information which require special handling. They will not be listed in this document.

8.2.8.3 User Datagram Protocol

User Datagram Protocol (UDP) incorporates sender and receiver 16-bit port numbers in each UDP message which extends the IP interface to the application level and provides application programs with the ability to communicate using the connectionless IP packet delivery service. UDP provides a transport layer service that supports the multicasting protocols which are needed to support the NISN data flows from a single source to multiple destinations. UDP delivery performance is maximized through the design of adequate buffers and appropriate sizing of bandwidth throughout the network. Use of Multicasting protocols minimizes the bandwidth needed over the backbone as multicast routers transport a single data message to multiple destinations. For detailed data format descriptions, see the NISN Internet IP Transition Data Format Document 541-231 on the GSFC home page listed in paragraph 8.2.8.1.

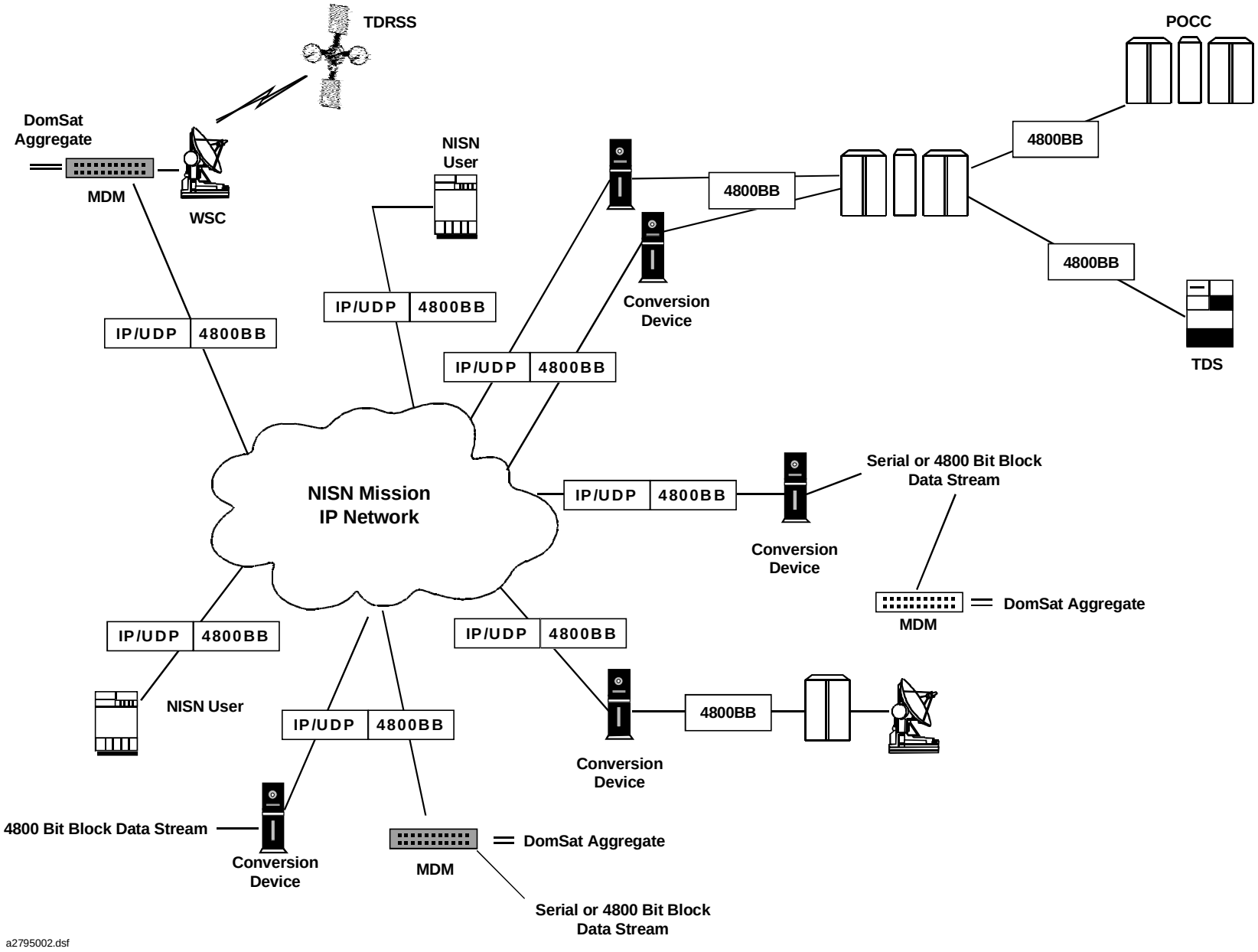

Figure 8-4. NISN IP Transition Configuration

8.2.8.4 Real-time Transport Protocol

The Real-time Transport Protocol (RTP) header provides a sequence count which can be used to monitor missed data or data out of sequence from a single source. The RTP header is embedded within the data portion of the UDP datagram before application data.

8.2.8.5 Multicast Open Shortest Path First

Multicast Open Shortest Path First (MOSPF) protocol is a router protocol based on demonstrated capability to meet requirements for non-flooding, fault isolation and fault recovery. The non-flooding attributes of MOSPF ensure against saturating bandwidth with error recovery messages. Fault isolation ensures that a localized fault does not affect unrelated data flows. Fault recovery is established by re-routing around a circuit or failed network device within 20 seconds.

8.2.8.6 Simple Network Management Protocol

Simple Network Management Protocol (SNMP) is a standard protocol which is used by the network management system to monitor and control routers and conversion devices.

8.2.8.7 Infrastructure Components

a. Routers. The Routers in the IONET are Bay Networks Access Stack Node (ASN), Backbone Link Node (BLN) and Backbone Concentrator Nodes (BCN) routers with MOSPF protocol. Each ASN unit supports up to 15 network interfaces. The ASNs Motorola 68040 maintains high forwarding rates even when processing SNMP management inquiries. The Bay Networks BLN and BCN routers are multiprotocol router/bridges designed to satisfy high performance and availability requirements of mission-critical backbone internetworks. The range of support goes from over 330,000 packets per second (pps) and 16 LAN/WAN interfaces (up to 4 First Distributed Data Interface [FDDI]) for the BLN to 52 LAN/WAN interfaces (up to 13 FDDI) and system forwarding performance that scales to 1 Mb/sec for the BCN. Comprehensive hardware and software redundancy options provide complete fault resiliency. The domestic router backbone is depicted in Figure 8-5.

b. IP Conversion Devices (CD). CDs encapsulate 4800-bit block data into RTP/UDP/IP datagrams for routing via the IP network. Conversely, conversion devices de-encapsulate the 4800-bit block data from the RTP/UDP/IP datagrams and forward the blocks to the serial user. NISN conversion devices are configured and controlled by the Network Management System (NMS) through the manipulation of two tables maintained by the NMS. The CD Configuration Table is unique for each conversion device and contains IP to serial and serial to IP mappings, subscribed multicast groups, and other information necessary to define and configure a CD and its serial interfaces. In addition, to support message switching of data, each conversion device has a copy of the Destination Code Mapping Table for use in mapping destination codes to IP addresses and UDP ports for transmission on the IP network. To support circuit switching, data configuration information found in each CDs Configuration Table will

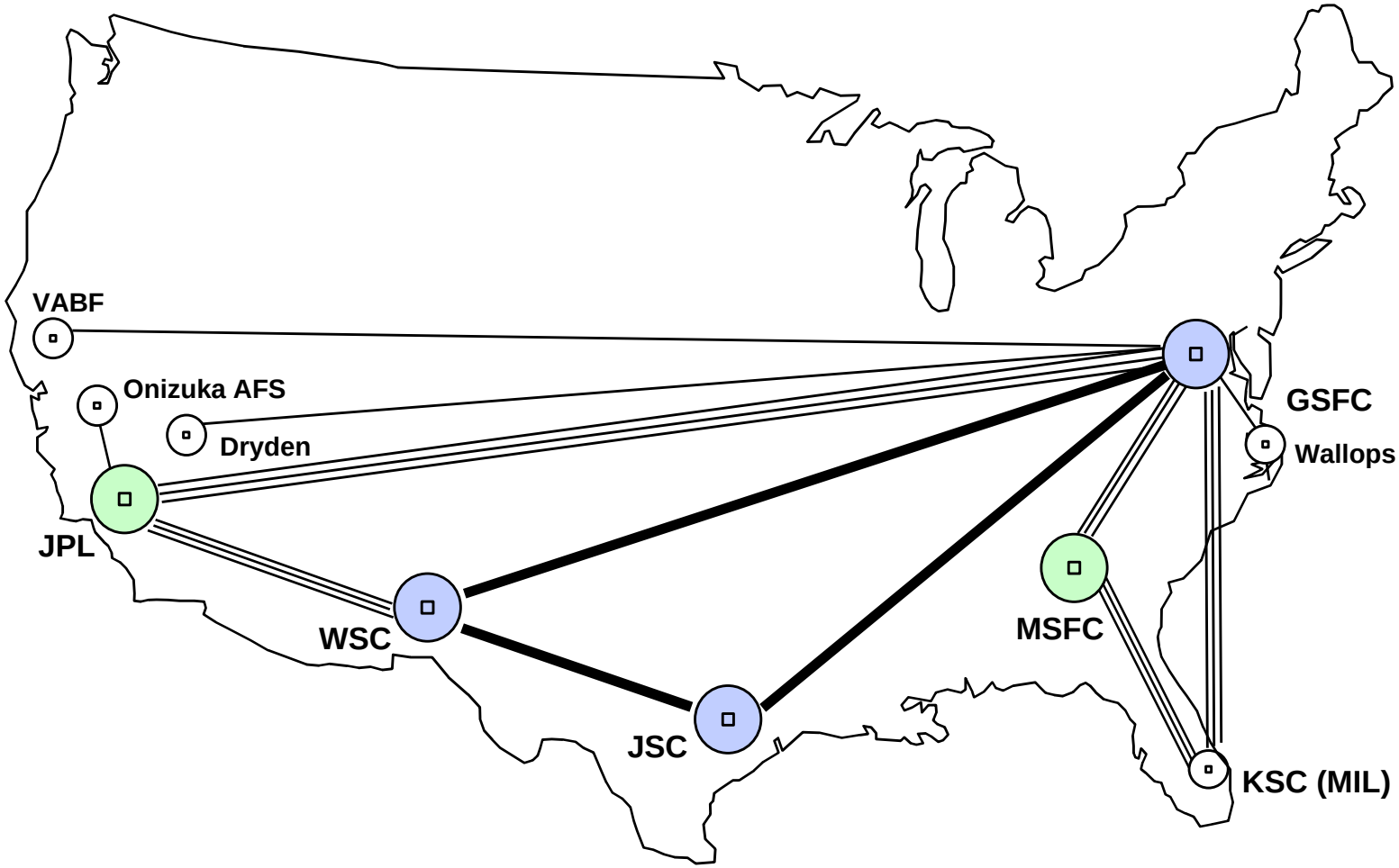

Figure 8-5. IP Transition Infrastructure

be used to map serial interfaces to IP addresses and UDP ports. NISN conversion devices include Small Conversion Devices (SCDs) which use the NISN Interface Board (NIB), and Programmable Telemetry Processors (PTPs) which use an AVTEC serial board. Both devices support multicasting protocols and SNMP for network management.

1. The SCD is one of two types of gateway units offered by NISN to network users for the passing of data. The SCD utilizes either NIB and/or Avtec serial boards and provides the capability of packaging 4800-bit block data into a UDP/IP packet for transfer to the routed data network. The SCDs recently underwent an application software upgrade to provide the ability to block and de-block serial data.

2. The PTP is the remaining type of gateway unit seen within the IONET. The PTP utilizes proprietary Avtec serial boards primarily. The PTP, like the SCD, provides the elementary process of passing data on the routed data network. The PTPs provide users with the ability to block/de-block serial data into UDP/IP packets. Additional capabilities are offered with the PTPs, which may come into use by network users, such as code filtering and certain mode blocking functions.

NOTE

Several users within the IONET developed in-house devices to access the routed data network instead of the NISN supplied devices, and as such has relegated to the self encapsulated frame of reference. NISN/Nascom can provide such users, specific standards information to insure that their new units conform to network design protocol. Network design protocol standards and other information can be obtained from the NASA Code 290 www homepage.

c. Modified MDMs. The MDMs at WSC and JSC were modified on the aggregate side to interface to the NISN IP network. They have increased buffering to reduce gap variance. The MUX aggregate side inserts RTP header sequence number by serial interface for encapsulation, encapsulates 4800-bit blocks into User Datagram Protocol packets for transmission over the IP network, provides performance information to the NMS using SNMP, and supports Internet Group Management Protocol (IGMP) for multicasting. The MDMs map Logical Port Addresses to IP addresses and UDP port numbers from NMS generated mapping table Interface to the NMS via SNMP to receive configuration changes. The aggregate output of the MUX still supports the same data rates as they always did, but the data format changed to support the transfer of data over an IP network. The MUX no longer uses the 80-bit link header that is currently added to each 4800-bit block. The data will be blocked before encapsulation for transmission in the IP network. After receipt by a conversion device(s), the data will be de-encapsulated and optionally deblocked if necessary for the user. The PTP supports deblocking output to the user but the SCD does not. The DEMUX aggregate side de-encapsulates 4800-bit blocks from the IP network for transmission to the user's

equipment, maps received data UDP port number to Logical Port Address for OUT transmissions using the NMS-generated mapping table, validates sequence number order and forwards out of sequence blocks, validates source IP address, and provides performance information to a NMS using SNMP.

8.2.8.8 Basic Data Transport Scenarios

The use of IP multicasting is supported in conversion devices, modified MDMs, and routers. Conversion device routing will support both message switching and circuit switching functionality. MDM routing will support the circuit switching functionality.

8.2.8.9 IP Multicasting Routing

IP multicasting provides a technique for multipoint routing, and is used in IONET. Multipoint routing is a requirement inherent in the NISN Closed IONET IP interface. In IP multicasting, an individual multicast group is a group of hosts that have all subscribed to receive data from an application. The IP packet containing the data can be identified by a particular Class D IP address and the subscribing hosts "join" that multicast group. Each host requesting to receive data identified by that Class D IP address must be registered as a member of that multicast group. The software involved in establishing these groups must incorporate the IGMP, a message interface between hosts and routers. The IONET hosts are the conversion devices and the modified MDMs.

8.2.8.10 Conversion Device Data Routing

a. Table-Driven Routing. The conversion devices support message switching by table-driven routing. The 4800-bit block Destination Code Mapping Table associates established NISN destination codes to Class D multicast addresses. The conversion devices' configuration defines a serial interface as table-driven based on the circuit being supported. For 4800-bit block messages destined to IONET from the user system, the conversion device will extract the Class D multicast destination address and port number (this combination is termed the "transport address") from the Destination Code Mapping Table based on the destination code contained in the NISN header of each 4800-bit block message. The 4800-bit block is then encapsulated in a RTP/UDP/IP datagram and forwarded for IP transmission using the extracted transport address. The receiving CDs will be configured to listen for data on that Class D multicast address and direct the data to one of its serial interfaces. More than one conversion device may be listening to the same Class D address and a single conversion device may listen to more than one Class D address.

b. Fixed Routing. The conversion devices support circuit switching by fixed routing. That is, a serial interface will be mapped directly to a Class D unicast address for special case point-to-point communications. This form of routing will be established through the configuration of the CDs and can be established for each or any serial interface. Fixed routing will support the capabilities provided by the current MDM interface and for circuit switching done currently for playbacks, testing, emergencies, or "make good" situations. SN scheduled services are an example of fixed routing and include forward and return services between TDRSS and users via WSC MDMs.

8.2.8.11 Modified MDMs

a. The modifications to the MDM equipment include the addition of a NISN LAN Interface Card (NLIC) to each device to provide conversion of the MDM aggregate interface (4800-bit block protocol) for transmission to/from the IP infrastructure.

b. The modified MDMs at WSC provide the interface between TDRSS and the IP backbone. The modified MDMs at JSC provide the interface between Shuttle and ISS users at JSC and the IP backbone. The modified MDMs support SNMP Version 1 with proprietary Management Information Base (MIB) for monitoring and control via the NMS. The NMS is provided by the NISN Network Operations Center (NOC) at GSFC. Each MDM device MIB contains IP mapping information and can also control MUX UDP/IP output as well as selecting DEMUX inputs from UDP/IP. The MIB contains traffic statistics to be monitored by the NMS. In addition, error traps will be sent to the NMS.

8.2.8.12 IP Conversion Device Management (CDM)

IP customers are existing Legacy or Closed IONET users that NISN has moved onto the IP infrastructure. These customers may be moved onto the IP infrastructure via a NISN-provided conversion device or via self encapsulation of NISN 4800-bit blocks according to the standards established by the IP Transition Project. User conversion devices are managed by the CDM section at GSFC, voice call sign CDMgr. The Closed IONET is managed by the IP NOC at GSFC, voice call sign IPNOC. In addition, through special arrangements, users can be self managed or self encapsulated.

8.2.8.13 Self Encapsulation

The IP transition customer has full responsibility for properly encapsulating 4800-bit blocks into UDP/IP Datagrams in accordance with the *NASA Communications (NISN) Internet Protocol (IP) Transition Data Format Document (DFD)*, dated May 1997. The customer is responsible for providing, managing, and maintaining any CDs necessary. NISN is responsible for managing and protecting the IP infrastructure that carries the customer's data. NISN will test with the customer to ensure compliance with the DFD.

8.2.8.14 Self Managed

The IP transition customer is given the ability to configure NISN-provided conversion devices in accordance with NISN guidelines. The IP Transition Project establishes the baseline operational configuration and guidelines for that customer's requirements. The customer agrees to adhere to the baseline and guidelines.

8.2.8.15 Space Shuttle Configurations

NISN support of the mission-critical Space Shuttle and ISS programs via IONET is accomplished via the use of modified MDMs for and CDs at the centers, which are connected to supporting routers interfacing to the IP infrastructure.

8.2.8.16 Johnson Space Center

a. JSC has 7 SCDs at their facility. SCDs 1 through 5 are managed by the CD Managers at GSFC and have been configured to support reception and transmission of ground support data from KSC (MIL/PDL), Wallops, Dryden, and Onizuka Air Force Station.

b. The SCDs provide clock tracking capability to help smooth the reception of Orbiter Data and Site Status messages by generating a continuous stream of data without the data gaps normally inherent in IP packets (see Figure 8-6). SCDs 8 and 9 at JSC are managed by Houston Comm Control.

c. Houston Comm Control utilizes two PTPs (6 and 7) to block 72-kb/sec forward commands for serial transmission to GN sites over a dedicated 224-kb/sec NISN-2000 circuit (see Figure 8-7). This dedicated line was instituted to preclude the effects of latency in IP packets. This circuit has a patch panel appearance at GSFC Tech Control for configuration and fault isolation capabilities. The SCDs at JSC are also used to mux together serial telemetry streams of data from GN sites.

NOTE

An additional SCD located at GSFC can be used for contingency command/telemetry data to JSC in the event of IP failure. Site status messages and Orbiter data from GN sites can be patched into the SCD and muxed for serial telemetry to JSC (see Figure 8-8).

d. Additionally, support to JSC during shuttle flight time via SN TDRS is supported from WSC via the MDMs. These units at WSC and JSC are front ended by specially developed network cards which are responsible for the encapsulation/de-encapsulation of network data for the delivery of same over the IP infrastructure. Specialized mapping tables in the WSC and JSC muxes/de-muxes contain multicast addresses corresponding to Logical Port Addresses. These mapping tables are maintained by the IPNOC located at GSFC and are updated by remote commanding.

8.2.8.17 MIL/PDL (KSC)

MIL and PDL Space Shuttle support is facilitated by six SCD conversion devices located at KSC CDSC and managed by the CD Managers at GSFC. Five of these devices interface serially to the KSC TMS for reception and transmission to the sites. The MIL/PDL command path (NON-IP) are supported by NISN 2000 circuits accessing a 745 mux and transitioning the KSC TMS nodes supporting them. Command echoes return via IP. Concurrently, S-band telemetry leaving the sites are sent back on two paths, one legacy (interfacing into the 745 mux) and the other IP (interfacing into a SCD). Nominal route is IP for telemetry with the legacy in standby for contingency. The legacy path is expected to be terminated in the future. The SCD channels provide on a one-for-one basis, replacements for the old legacy NISN 2000 circuits.

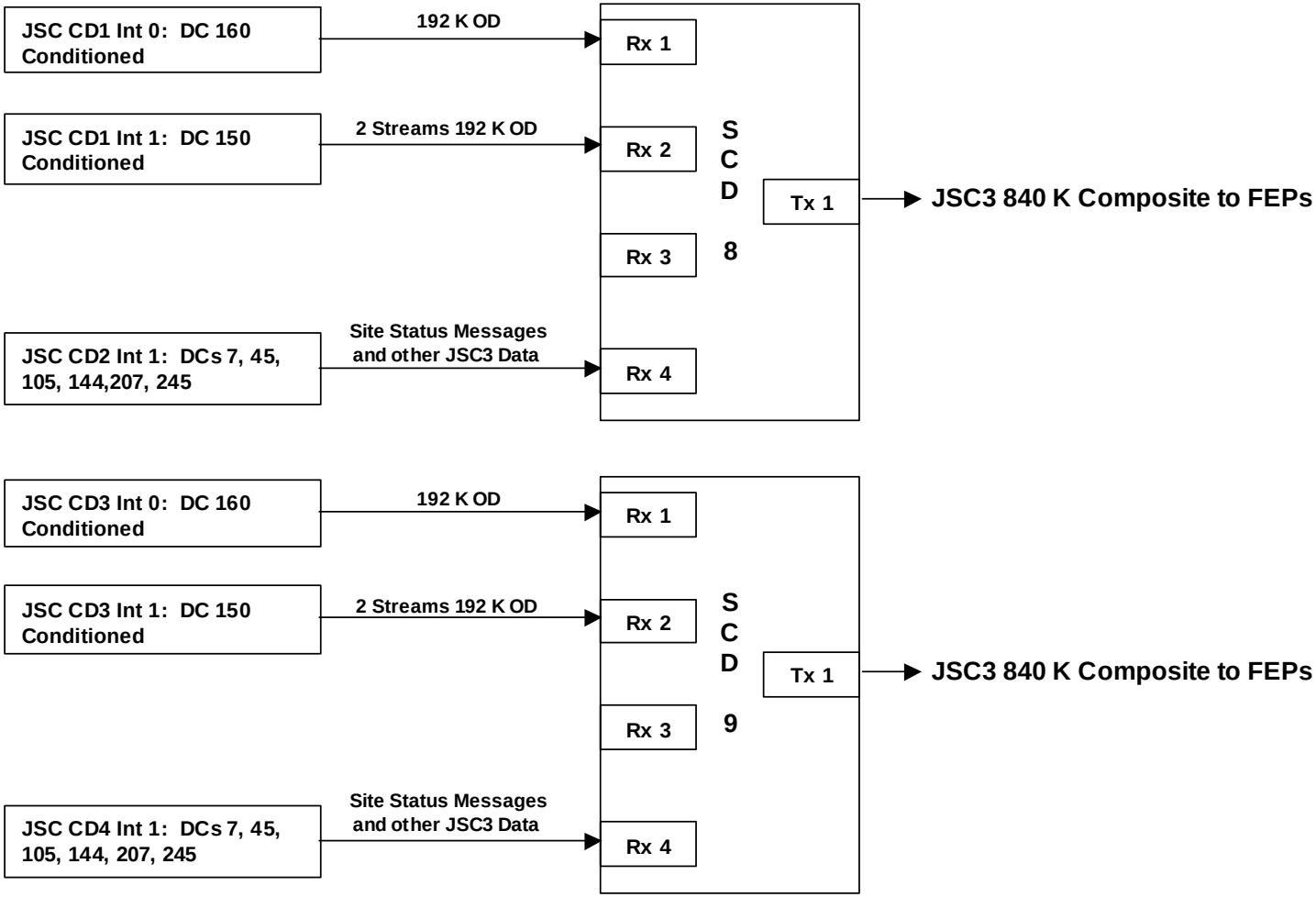

NOTE

Refer to *JSC/GSFC ICD 11534, Vol. II, 542-016,* for D/C assignments.

Figure 8-6. JSC SCD Configuration for 192K OD Smoothing

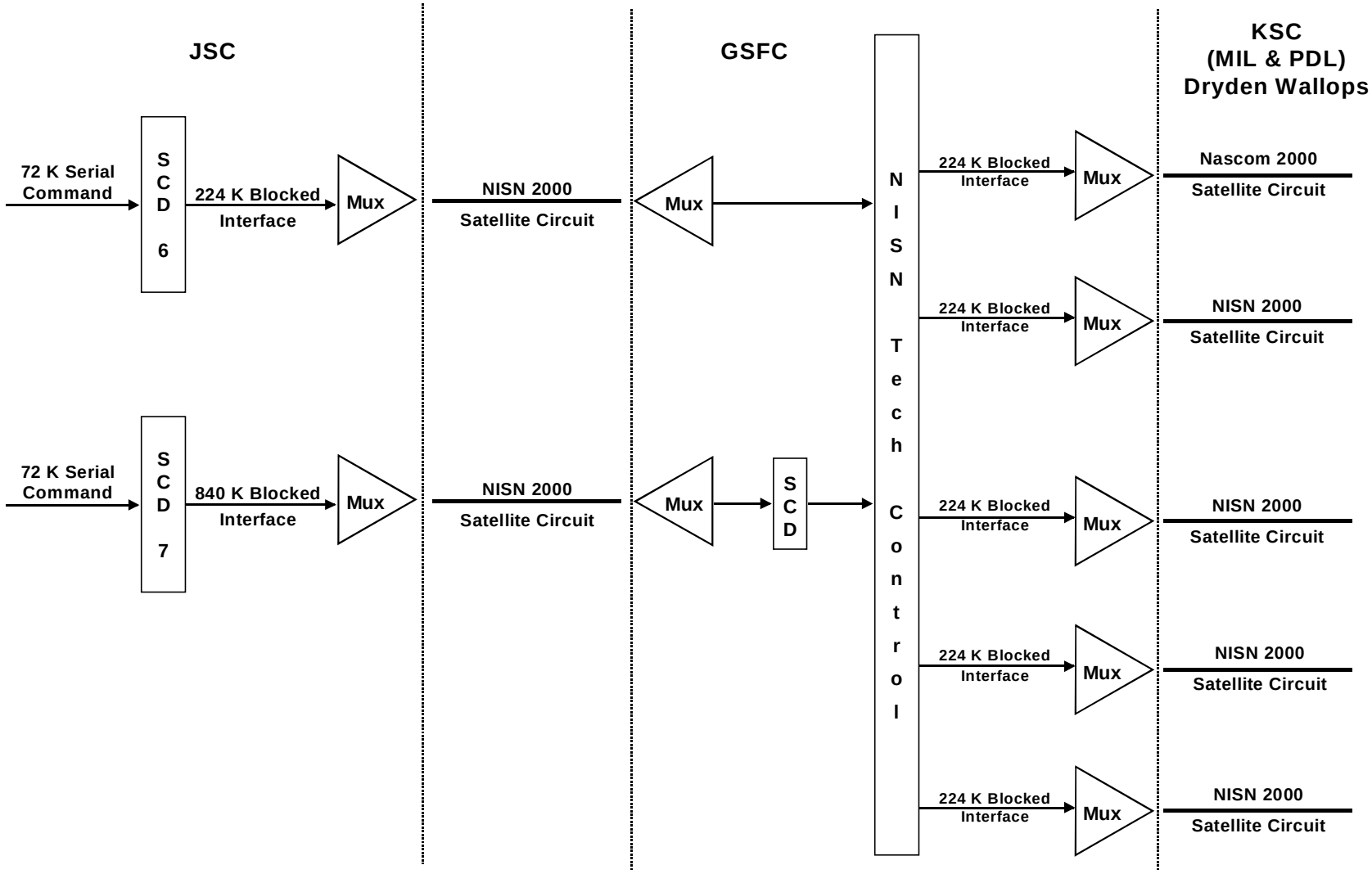

a2795076.dsf

Figure 8-7. 72K Shuttle Command

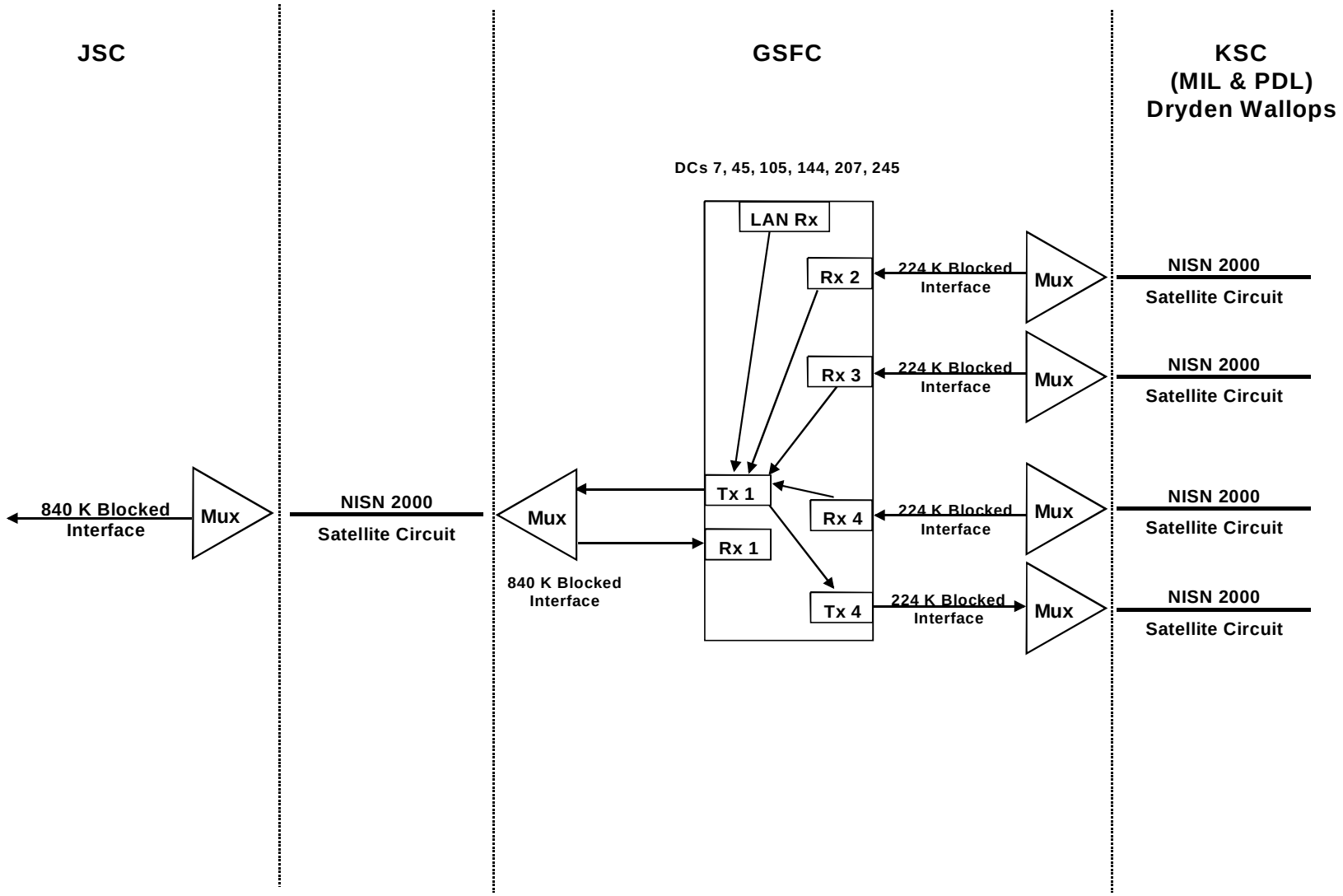

a2795075.dsf

Figure 8-8. Shuttle GN Contingency Return

8.2.8.18 Onizuka Air Force Station

The OAFS facility has a prime I/F direct to GSFC and a backup I/F via JPL. OAFS provides their Space Shuttle support via PTPs. There are four PTPs at OAFS: two configure for Space Shuttle support and two configure for GOES. The GOES PTPs can be used for backup Space Shuttle support. The OAFS site is considered a self-encapsulated facility and as such is completely responsible for the correct configuration of its conversion devices. OAFS has a responsibility to support the K-band Channel 2 interface from Space Shuttle to JSC and 192-kb/sec OD data.

8.2.8.19 DFRC

The DFRC support of shuttle is handled by two SCDs, configurable by the CD Managers. One device is prime with the other set for backup mode. Dryden can support the Space Shuttle high-rate telemetry (960-/1024-kb playback at a reduced rate) in addition to 192-kb/sec OD to NCC and JSC. As is the case for other telemetry sites, if the prime IP route failed, GSFC Tech Control can patch from their prime NISN 2000 interface to a serial port on the GSFC Contingency Shuttle Telemetry PTP for continuing support to JSC.

8.2.8.20 Wallops Island

The Wallops Island (WLPS) support of Space Shuttle is handled by SCDs at their facility which are configurable by the CD Managers. WLPS has four such devices assigned, one of which is considered spare. The WLPS facility can support the real-time and playback shuttle high-rate data exchanges and, payload data. They also act as a relay of shuttle ascent OD to MIL for high-inclination launches. As is the case for other telemetry sites, in the event of prime IP route failure, GSFC can support telemetry flow to JSC via the GSFC Contingency Shuttle Telemetry SCD.

8.2.8.21 MSFC

The MSFC support of Space Shuttle is handled by five SCDs at their facility which are self managed. Due to the nature of MSFC to need to rate change for K-band Channel 2 data reception, MSFC has taken full responsibility for the configuration of their conversion devices. In addition to the K-band, MSFC supports the merged playback and SSME data flows to KSC using a combination of unmapped addresses and fixed addresses all of which have been assigned by GSFC.

8.2.9 Circuit Description

NOTE

The following circuits are used to support specific Space Shuttle missions, as required.

8.2.9.1 Wideband Data Circuits

NOTE

See Figure 8-9 for a diagram of Space Shuttle wideband circuits.

a. GSFC to MIL/KSC and MSFC. All Shuttle 64-, 128-, 192-, or 96-kb/sec TLM including launch, orbital, landing, and post-landing data from TDRS, STDN stations, or RTS will be transmitted to KSC/LCC via GSFC and MIL. GSFC receives the JSC real-time OD data (OD backfeed) output from a JSC MDM channel. The JSC R/T OD data output is best source TLM as received at JSC from TDRS, RTS, and GN stations. The data will be transmitted by GSFC to MIL via IP and conversion devices. At MIL the data will be deblocked, and the resulting serial data transmitted to the KSC/LCC for their use. The JSC real-time OD data will also be extended by NISN to MSFC via IP conversion device. KSC will also extend the JSC real-time OD data to MSFC via a KSC/MSFC Transmission System (KMTS) channel (backup).

b. MIL to TEL-4. One SX 192-kb/sec wideband circuit is provided from MIL to TEL-4. This circuit will provide MIL or PDL OD DL during launch for processing at TEL-4 and remoting to ER ROCC.

c. WSC to JSC and GSFC Statistical Multiplexer System. One SX circuit capable of transmitting 48-Mb/sec data, 4.2 MHz analog data, or video will be provided from WSC to JSC, and GSFC. At GSFC, this circuit is extended to the NISN Tech Control (for trouble isolation only). WSC only has transmission capability on this circuit. GE transponder GE2XP5 is used in support of the Stat Mux system.

d. KMTS. These circuits will be provided with multiplexer equipment for the transmission of Shuttle pre-launch and post-launch TLM, launch phase SSME data, and various voice, fax, and other type data.

e. KSC LPS-JSC MER Transmission System. T-1s will be provided between KSC and JSC. These circuits will be provided with mux equipment for the KSC/LPS transmission of common buffer, umbilical, main engine, voice, and various other Space Shuttle related data between KSC and JSC.

f. JSC-Boeing Huntington Beach (BHB). One FDX T-1 circuit will be provided between JSC and Boeing for the transmission of voice and data between these two locations. This system is equipped with a Time Division Multiplexer (TDM) system.

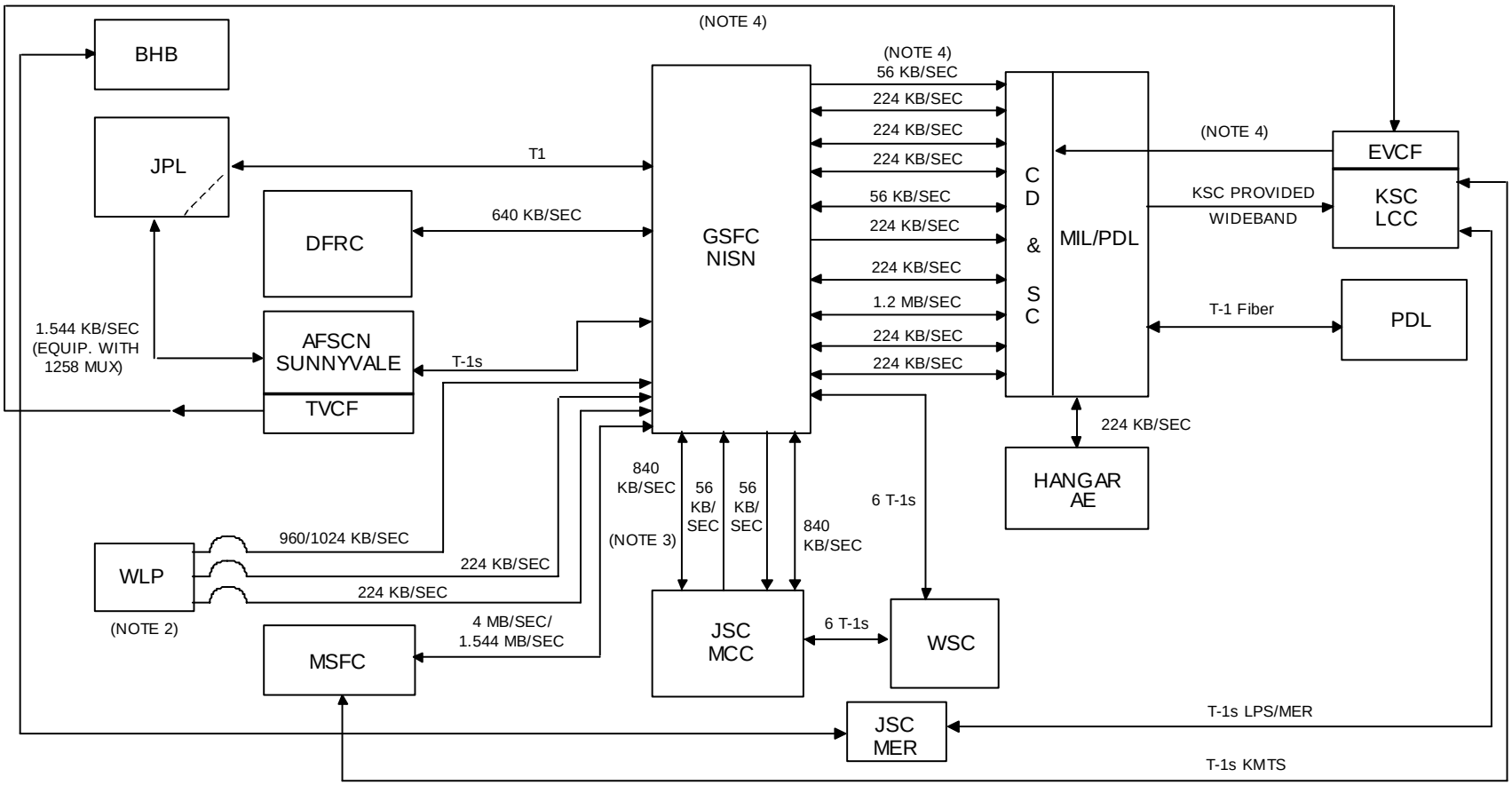

NOTE

1. ALL 128-, 192-, 64-, OR 96-KB/SEC SPACE SHUTTLE OD DATA IS TRANSMITTED TO KSC. MIL-TO-KSC WIDEBANDS ARE USED FOR THIS PURPOSE.
2. WHEN WPS SUPPORT IS REQUIRED, WPS TRANSMITS ASCENT OD TLM TO MIL 224-KB/SEC CIRCUIT, A FDX 224-KB/SEC INTERFACE TO GSFC FOR TRANSMISSION OF 192-KB/SEC TLM/CMD DATA TO AND FROM JSC AND WLPS 960/1024 KB DUMP DATA TO JSC.
3. 840-KB/SEC CONTINGENCY VIA NISN CIRCUIT
4. 56-KB/SEC ICV DATA SUPPORT.

Figure 8-9. Space Shuttle Wideband Circuits

g. GSFC-CCAFS ROCC Intercenter Vector (ICV) Transmission System/AFSCN Backup Command. One FDX 56-kb/sec circuit will be provided between GSFC and the CCAFS for transmission of JSC-originated ICVs to the CCAFS ROCC. The ICVs will be received at GSFC via Closed IONET (see Figure 8-10) then extended from GSFC to CDSC via a 56-kb/sec circuit, and from CDSC to ROCC via government fiber optic cable. The backside of the circuit will be extended from AFSCN to CCAFS EVCF via a government MDM system, from EVCF to CDSC via government cable, from CDSC to GSFC via a 56-kb/sec circuit, from GSFC to JSC via JSC-GSFC closed IONET system.

8.2.9.2 Narrowband Data Circuits

a. Launch Data Evaluation System (LDES) (2.4 kb/sec) Launch Acquisition Data Circuit. One SX 2.4-kb/sec LDES acquisition data circuit is extended direct from ER/ROCC to MIL. Two simplex 2.4-kb/sec LDES acquisition data circuits are extended from ER/ROCC to GSFC NISN for further extension to WFF for all KSC launches. This LDES data is also extended by GSFC NISN to FDF.

NOTE

The 2.4-kb/sec MDDF data Range Safety circuits must be routed by other than communication satellite circuits to prevent excessive time delays which would cause data to be unusable.

b. LDES (2.4 kb/sec) Landing Acquisition Data Circuit. Two SX 2.4-kb/sec LDES acquisition data circuits are provided between ER/ROCC and GSFC NISN for all EAFB landings.

c. Flight Control Officer (FCO) (2.4 kb/sec) TLM Parameter Circuits. Two additional FDX 2.4-kb/sec circuits are provided from MIL to ER/ROCC. During launch phase of Space Shuttle, MIL transmits two data streams to ER/ROCC for processing and further transmission to FCO. One data stream will be MIL FCO TLM parameters and the second will be PDL FCO TLM parameters. (See Figure 8-10.)

d. C-band Tracking Data (WR to ER) 9.6 kb/sec. Two 9.6-kb/sec data circuits are provided from WR Data Switch to ER/ROCC for transmission of HSR C-band tracking data. Data from four radars (at 2.4 kb/sec) will be multiplexed and transmitted on each 9.6-kb/sec circuit. (These circuits are provided by DOD.) (See Figure 8-11.)

e. C-band Tracking Data (WSMR to ER) 2.4 kb/sec. Two 2.4-kb/sec data circuits are provided from WSMR computers to ER/ROCC for transmission of HSR C-band tracking data. Data from two radars at 10 samples/sec will be reformatted, multiplexed, and transmitted on each 2.4-kb/sec circuit. (These circuits are provided by DOD.) (See Figure 8-12.)

f. C-band Tracking Data (AFFTC/DFRC to ER/ROCC) 2.4 kb/sec. There are two possible communications routes for the AFFTC/DFRC C-band tracking data to be transmitted to ER/ROCC from DFRC. One route is AFFTC to WR to ER/ROCC. The other route is a direct route to ER/ROCC. Data may be transmitted simultaneously via both routes. The best source of data received via the first or second route will be used by ER/ROCC.

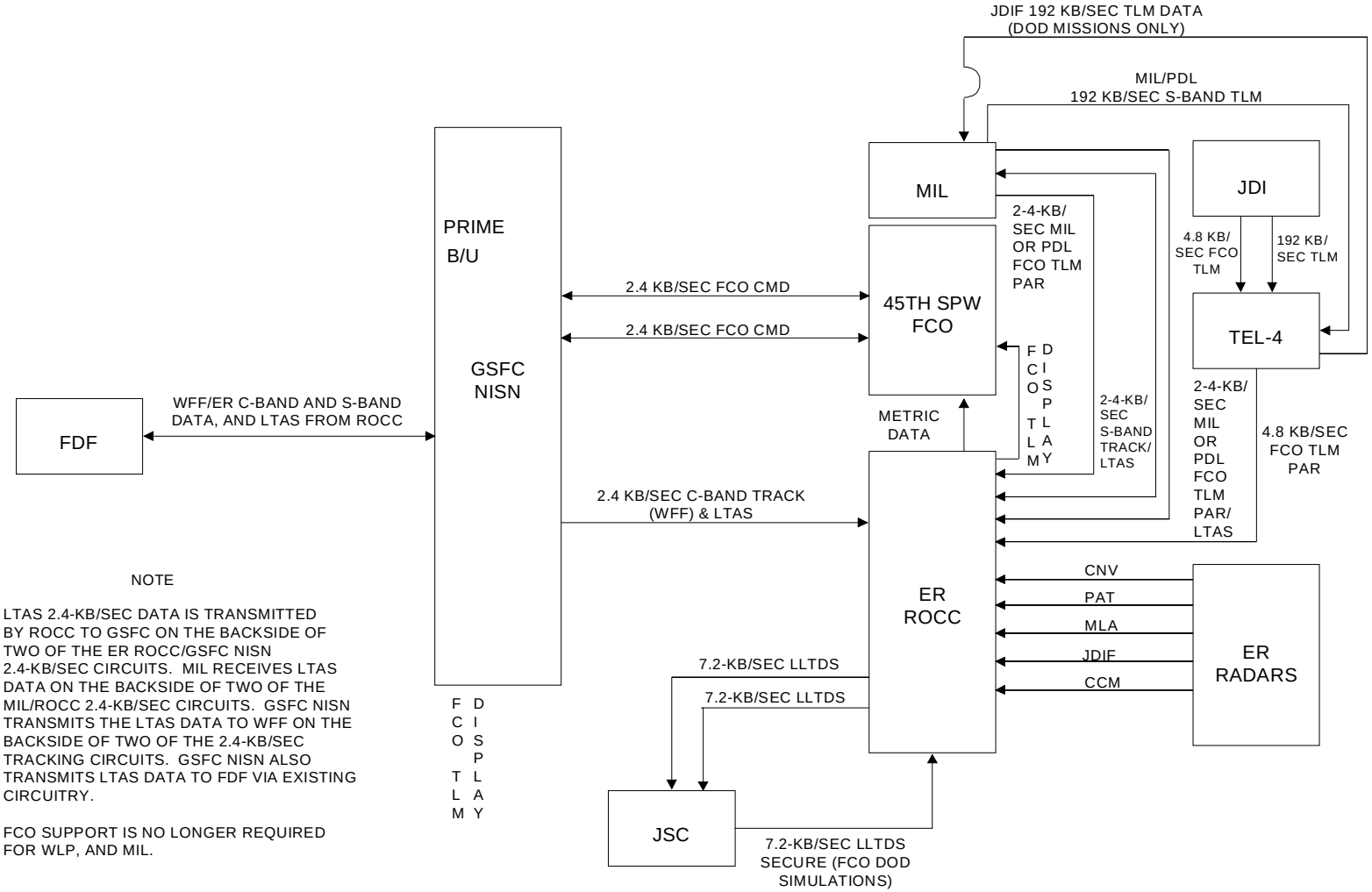

NOTE

1. LTAS 2.4-KB/SEC DATA IS TRANSMITTED BY ROCC TO GSFC ON THE BACKSIDE OF TWO OF THE ER ROCC/GSFC NISN 2.4-KB/SEC CIRCUITS. MIL RECEIVES LTAS DATA ON THE BACKSIDE OF TWO OF THE MIL/ROCC 2.4-KB/SEC CIRCUITS. GSFC NISN TRANSMITS THE LTAS DATA TO WFF ON THE BACKSIDE OF TWO OF THE 2.4-KB/SEC TRACKING CIRCUITS. GSFC NISN ALSO TRANSMITS LTAS DATA TO FDF VIA EXISTING CIRCUITRY.

2. FCO SUPPORT IS NO LONGER REQUIRED FOR WLP, AND MIL.

a2795008.dsf:x

Figure 8-10. Space Shuttle FCO Circuiting

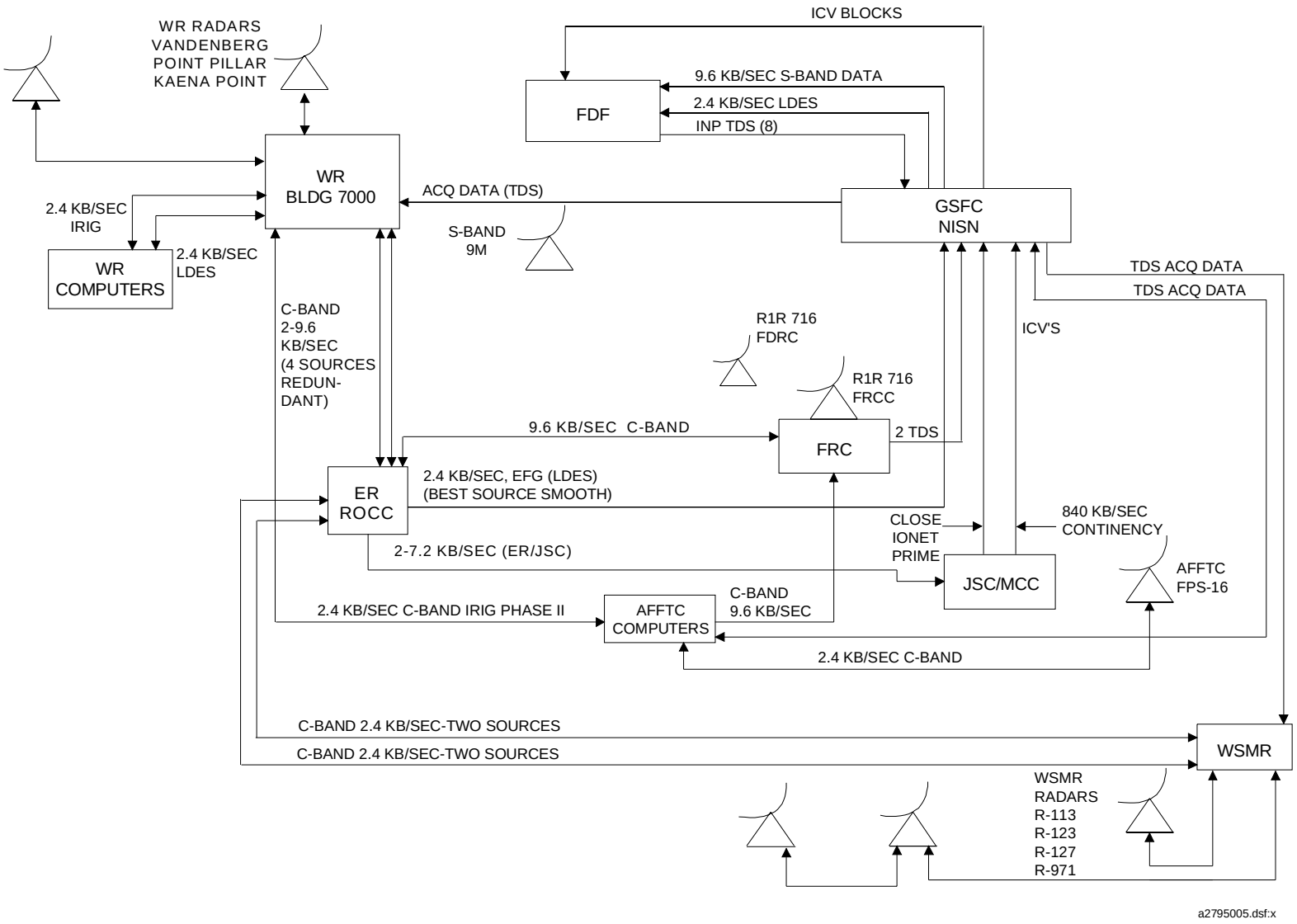

Figure 8-11. Space Shuttle Landing Phase Tracking Data System (EAFB Landing/WSMR Landing)

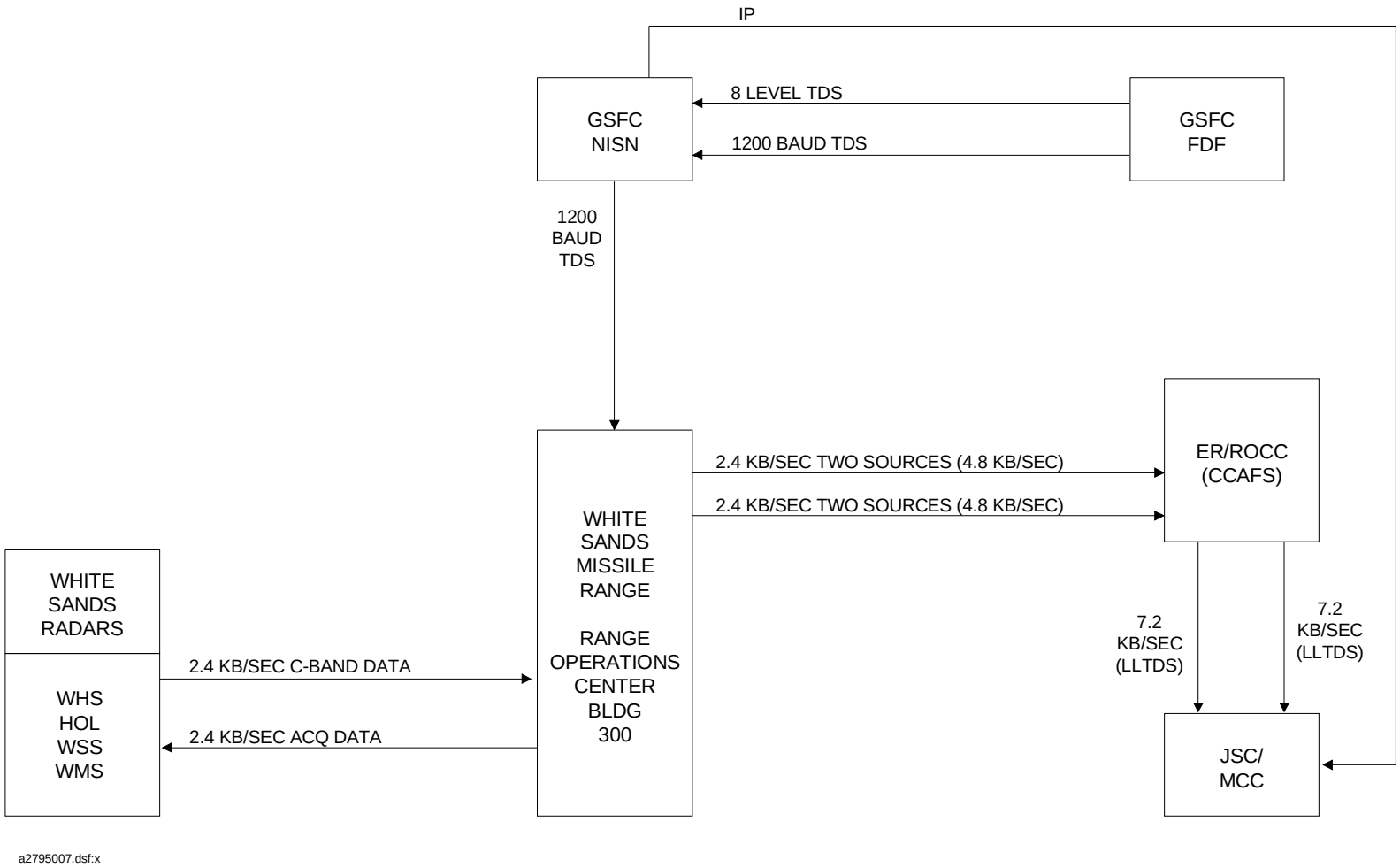

Figure 8-12. WSSH Landing Tracking System

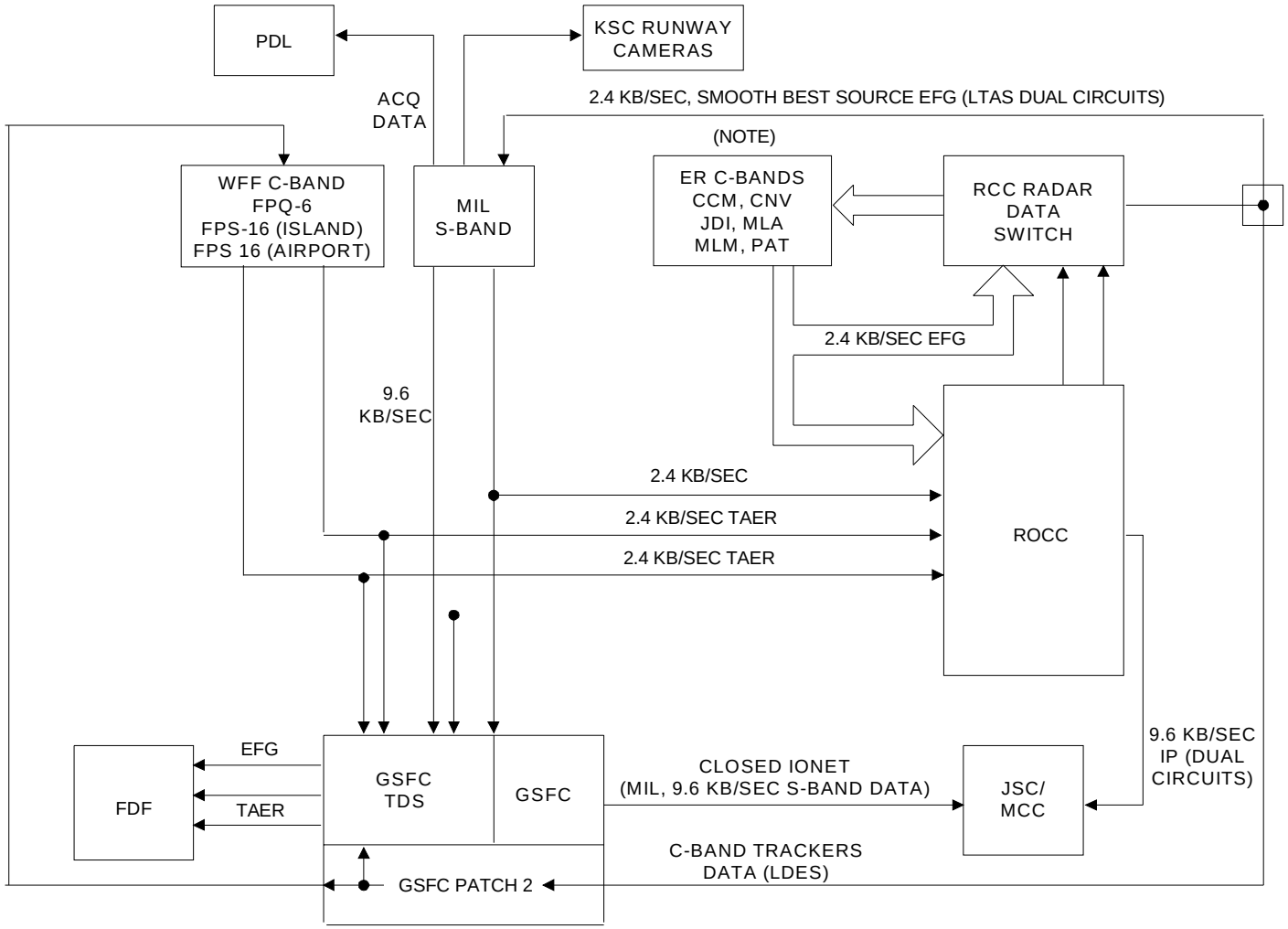

Figure 8-13. Space Shuttle Launch and Return to Launch Site Phase Tracking Data System

8.2.9.3 Video Circuits

a. Prelaunch Video. Video is provided from MIL/KSC to JSC for launch pad/spacecraft tests and checkouts. (See Figure 8-14.) During minus count (approximately L-12) hours KSC transmits ICE TV to MSFC and MER TV to JSC via GE Satellite GE2XP5 simultaneously using 1/2 of transponder for each.

b. Launch Day Video. Video is provided from KSC to JSC, DFRC, MSFC, GSFC and other locations capable of receiving NASA select video via the GE satellite GE2XP9. The KSC-to-JSC, DFRC, MSFC, GSFC and other locations are capable of receiving NASA select video which contains pictures from the launch pad, tracking, and other launch support cameras.

c. Orbital Video. Orbital video is provided from WSC, DFRC, and MIL to JSC/MCC on a scheduled basis (NASA TV). Most orbital video is either color camcorder or color camera video. At JSC, NASA TV is uplinked on GEZXP9 in near real time.

d. Landing Video. Landing and roll-out video is transmitted from DFRC or KSC to JSC for each flight. GE GE2XP9 is utilized for transmission of Space Shuttle landings at DFRC.

e. KSC to JSC/MER and MSFC/ICE Team Video.

   1. NISN has tasked GE Americom to procure, install, and maintain a Colorado Video-manufactured system at KSC, JSC, and MSFC. This installation allows both JSC/MER and MSFC/ICE team personnel to select and receive video camera scenes from KSC launch support cameras using a single GE Americom transponder.

   2. The multiplexer is installed at KSC with the demultiplexers at JSC and MSFC. There exists a 2.4-kb/sec camera select circuit between KSC and JSC/MER and another circuit between KSC and MSFC/ICE team. JSC and MSFC are provided demultiplexer equipment which allows them to receive the combined camera scenes from KSC and strip out the camera scenes selected by their particular location.

   3. KSC and GSFC have both been provided demultiplexers so that KSC can monitor the quality of their multiplexed uplink and GSFC (as provider of the entire system) can monitor the video as received at JSC/MER and MSFC/ICE.

   4. The system normally utilizes the GE Americom GE2XP5 satellite/transponder; however, the GE2XP9 satellite/transponder can also be utilized on this system.

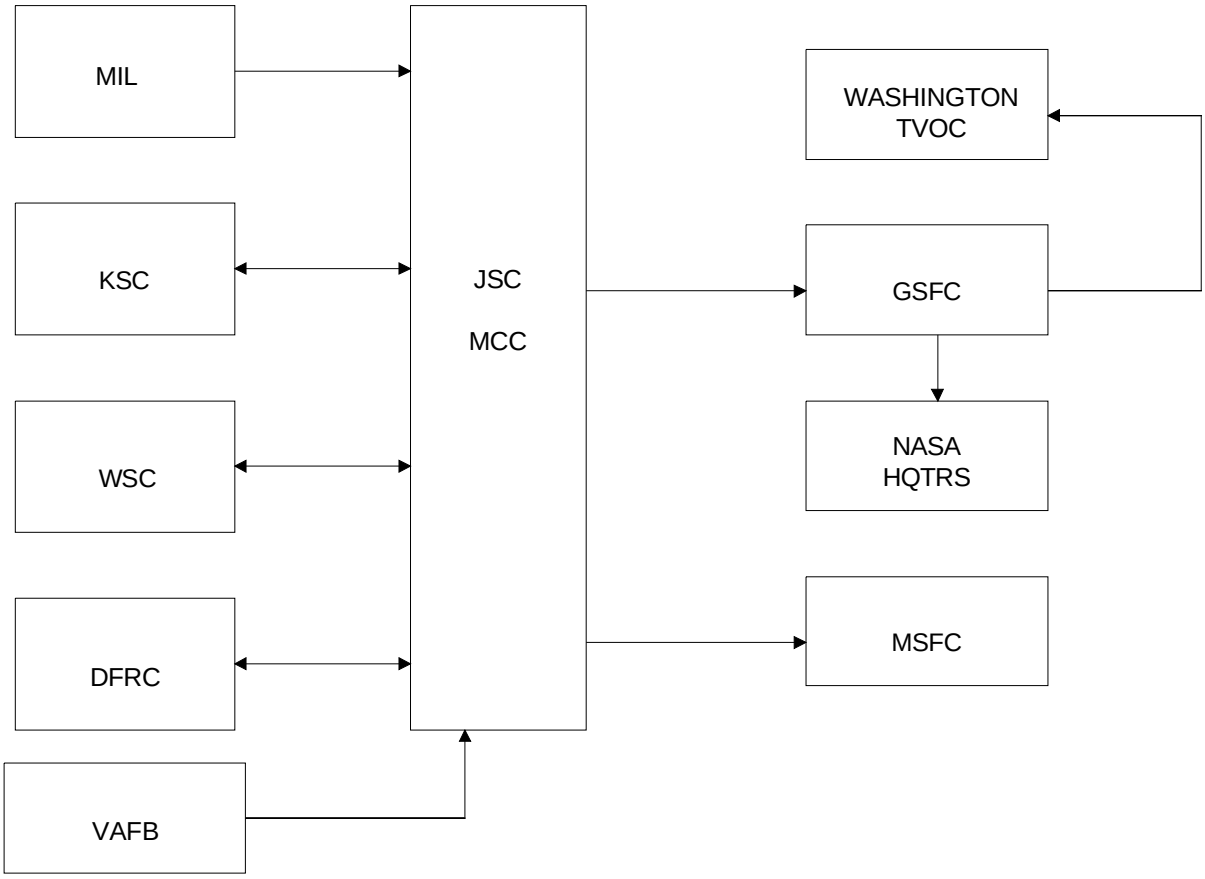

NOTE

1. EACH VIDEO CIRCUIT HAS A PROGRAM VOICE CIRCUIT ACCOMPANYING THE VIDEO. (IT MUST BE IN THE SAME COMMUNICATIONS PATH WITH VIDEO TO PREVENT LIP SYNC PROBLEMS.)

2. SEVERAL OTHER NASA CENTERS (LARC, LRC, WR, ARC), AND BHB ALSO HAVE THE CAPABILITY TO RECEIVE THE NASA SELECT VIDEO VIA THE GE AMERICOM SATELLITE GE2XP9.

a2795009.dsf

Figure 8-14. Space Shuttle Video Circuits

5. The KSC, JSC, and MSFC video personnel are responsible for checkout and making sure the system is ready to support Space Shuttle prelaunch activities (normally commencing approximately 12 hours prior to liftoff through liftoff). If problems are encountered during the checkout and operations of the system which cannot be readily corrected by local video personnel, then the local GE Americom technician should be contacted for assistance.

f. Video Validation Testing. Video validation testing from WSC, KSC/MIL to JSC are conducted several days prior to launch.

NOTE

Refer to Table 8-2 for video troubleshooting procedures.

8.2.9.4 Contingency Landing Sites

a. Voice and E-Mail capabilities are provided between JSC/MCC and contingent landing sites using existing DOD and NASA resources.

b. Augmented/Emergency Sites provide downlink telemetry data in real time from the orbiter during turnaround activities at an ALS/ELS from landing through orbiter power down at the landing site. NISN will provide circuits to route telemetry data from the ALS/ELS to KSC/MIL. If the ALS/ELS (including WSSH) is within view of TDRS, real-time downlink telemetry support will be provided through TDRS on a best-effort basis. Scheduling of required TDRS support can be arranged through the NCC/WSC. A description of ALS/ELS telemetry support capabilities for Space Shuttle landings is provided in paragraph 1.1.4.1.

8.2.9.5 Video Troubleshooting Procedures

Table 8-2 contains video troubleshooting procedures.

Table 8-2. Television Circuit Troubleshooting Procedures

Condition	Action By	Action Taken
Loss of signal at JSC	Houston TV	Verify that the site has generator on-line, or if during a pass they have a good downlink from the Shuttle, and data is leaving site.
	Site	Confirms data is leaving site.
	Houston TV	Check with the GSFC TV to determine if signal is present at GSFC.
	GSFC TV	Confirm good signal.
	JSC Earth Station	Good downlink is Station confirmed and data is going toward JSC TV.
	Houston TV	Start troubleshooting internally and keep Com Mgr advised.
	Site	Confirm data is leaving.
Still no signal from station	Houston TV	Check with GSFC TV to determine if signal is present at GSFC, and if not, Houston TV will request site earth station to place test generator on-line.
No signal from site earth station	Houston TV	If no signal present confirm with GSFC TV if they have signal. If GSFC TV confirms good signal, Houston TV check with JSC GE Americom earth station. If they advise good signal and data is going towards JSC TV, JSC TV start in-house troubleshooting. If no signal present at JSC earth station, Houston TV will advise the Com Mgr to log out circuit to carrier and keep Houston TV and Com Control advised. Note The carrier will go off-net on their internal communications network and take restoral action
Good interface	Station and site	Go to off-net conference from the site and isolate the problem. Keep Com Mgr and Houston TV advised.
	Houston TV	Decide which station is next for interface and advise Com Mgr and GSFC TV.

Section 11. Data Management

11.1 General

This section describes the data management procedures for all data recorded by the STDN and affiliated stations in support of the Space Shuttle missions. Recorded mission data must be identified, annotated, labeled, packaged, and shipped in accordance with procedures in the STDN Network Operations Procedures for Data Management, STDN No. 502.11, except as specified in this NOSP.

11.2 Data Requirements and Disposition

11.2.1 Testing

11.2.1.1 Prelaunch Testing

The data requirements and disposition for all data recorded during prelaunch testing will be as specified in the applicable test documentation.

11.2.1.2 Validation Testing

The recorded data requirements and disposition for validation testing are contained in the MCC/STDN Validation Testing Manual, or as scheduled.

11.2.2 Launch Through Mission Termination

The data requirements, disposition, and description for all recorded data from launch through mission termination are specified in Tables 11-1 through 11-4. Data required from either of the three mission phases is indicated by an X in the appropriate column.

11.2.3 DOD Data Disposition

DOD will continue their practice and policy of holding data on site for 30 days after End of Mission (EOM) prior to disposing. This will include all data; i.e., logs, stripcharts, and magnetic tapes. Within this 30-day period, any request for DOD data will made through the appropriate DOD agency.

11.2.4 Postmission Data Requirements and Disposition

11.2.4.1

Postmission evaluation of C-band radar performance and accuracy are required for all supporting radars for ascent, onorbit, and entry/landing phase. Reports are required by launch plus 6 weeks.

11.2.4.2

Quick-look reports are requested as soon as possible and final reports by launch plus 6 weeks.

11.2.4.3
This data is to be sent to JSC/Houston Track/LM4-D1F.

11.3 Data Requests

11.3.1
Any office or agency requiring data recorded as indicated in Tables 11-1 through 11-4 should contact GSFC Shuttle Data Manager or the GSFC Data Services Coordinator at the NCC.

GSFC Shuttle Data Manager	**GSFC Data Services Coordinator**
James Braun	Hal Harris
Code 450J	Code 450J
301-286-2445	Console: N/A
AMS-GDES	Office: 301-286-4949
	hharris@pop500.gsfc.nasa.gov

11.3.2
Requests for data should be submitted to the GSFC Shuttle Data Manager. The request should contain the following information: Recording station, DSS No., year, month, day, and GMT start and stop times of the data recording, and the five-digit tape number (if tape is requested). GSFC then transmits an ISI with appropriate shipping instructions to the applicable station.

11.4 Data Retention

Data will be retained in accordance with Management Directive 100.4, dated October 12, 1978. Part 4 of the Management Directive Policy statement is as follows:

a. Tape records may be stored by Office of Space Shuttle Program and supporting field installations for no longer than 1 year commencing at the time the data is made available to the ultimate user in whatever form originally agreed on or subsequently negotiated.

   1. During this time, the ultimate user of the data may request reprocessing or redelivery.

   2. This 1-year period applies to all recorded forms of data, including original, intermediate, and final recordings.

b. Funding to cover the cost of the tapes will be budgeted for by the responsible program offices or users.

c. Once the data has been made available to the ultimate user, only the most economical form containing all of the original data in reprocessable or redeliverable form may be stored. Tapes containing all other forms of this data will be immediately made available for reuse. Any extension to the 1-year storage time must be approved by the Associate Administrator for Shuttle Space Program or the cognizant Center Director.

11.5 Data Labels

Detailed procedures for annotating and attaching data labels are contained in STDN No. 502.11. All TLM tapes shipped off station will use three labels as follows:

a. Attach one 2097 label to the reel, and one to the reel container lid.

NOTE

Annotate tape label to indicate tape number that contains prepass cals.

b. Attach one 2102 label to the top narrow edge of the individual cardboard carton sleeve containing the tape.

c. These stations using metrum recorders will include a 2102 label within the cassette case.

11.6 Shipping

11.6.1 General

All data shipments are made in accordance with STDN No. 502.11 and this NOSP. All stations supporting launch through landing expedite recorded data via first available flight after station final LOS, in accordance with the requirements specified in Tables 11-1 through 11-4, as applicable.

11.6.2 STDN Stations Shipments

All stations ship required data by airfreight. GSFC Code 587 makes arrangements with local airline freight managers for transfer of data at all applicable connecting points. Stations will indicate flight routing on the airway bill and in the data shipment advisory message. The recommended airfreight shipping schedule for each station will be sent by OPN.

11.6.3 Shipping Addresses

NASA Goddard Space Flight Center

Building 16

Greenbelt Road

Greenbelt, MD 20771 USA

M/F: Facility Management Section, Code 450J

Attn: Archiving and Distribution

11.7 Tape Numbering

For Space Shuttle support, magnetic tape sequential procedures differ from those in STDN No. 502.11 and the *Network Control Center and Spaceflight Tracking and Data Network Station Interface Procedures*, 451-SIP-NCC/STDN, Volumes 1 and 2. Tapes at each station are assigned a five-digit number derived as follows:

a. The first three digits will represent the Julian day of the current year. The last two digits will represent the sequential number count of tapes for that given day. The sequential number will be recycled to XXX01 at 0001 GMT of each day.

NOTE

The GMT start times will determine what Julian day will be used in the sequential tape number position when the recording covers more than one day.

b. Each of the following DSS numbered tapes will be assigned a separate series of sequential tape numbers (last two digits) for each Julian day:

1. DSS-137: Number only if shipped.
2. DSS-244: Number only if shipped.
3. DSS-330.
4. DSS-430.
5. DSS-530.
6. DSS-532.
7. DSS-535.
8. DSS-536A and -536B (postlanding support).

   (a) During postlanding, when two sets of tapes are required, sequentially number as follows:

Set No. 1		Set No. 1	
DSS-536A	XXX01	DSS-536B	XXX01
DSS-536A	XXX02	DSS-536B	XXX02
DSS-536A	XXX03	DSS-536B	XXX03

   (b) DFRC only for DSS-536A and DSS-536B, these tapes will alternate numbers; e.g., DSS-536A XXX01, DSS-536B XXX02, DSS-536A XXX03, etc.

9. DSS-537.
10. DSS-538.
11. DSS-539.
12. DSS-540.
13. DSS-541.

14. DSS-543.
15. DSS-544A, -544B. (These tapes will alternate numbers; e.g., DSS-544A XXX01, -544B XXX02, -544A XXX03, etc.)
16. DSS-840.
17. DSS-841.

11.8 Data Identification

Tables 11-1 through 11-4 of this NOSP list mission data requirements and appropriate DSS number assignments for the STDN and affiliated stations. Additional information is contained in STDN No. 502.11.

11.9 Space Shuttle Private Conversations

In the event a private A-G conversation is recorded, use the following procedures:

a. Attach the special Space Shuttle Private Conversations Label STDN No. 2166 to both the reel hub and the tape container (see Figure 11-1).

b. Hold the tape on station until disposition instructions are received by ISI.

c. Analog A-G voice is not recorded in encrypted mode.

SPACE SHUTTLE
PRIVATE
CONVERSATIONS
DO NOT RETRANSMIT

STDN 2166(3/79)

NOTE

1. Labels are black on fluorescent orange.
2. Voice from tapes containing this label will not be converted to analog; therefore, data transmission is permissible.

Figure 11-1. STDN Label 2166, Space Shuttle Private Conversations

Table 11-1. MIL Data Requirements and Disposition (1 of 2)

DSS	LAU	ORB	LAN	Data Description	Disposition	
					Station	**GSFC Code 453**
Computer Complex						
137	X	X	X	STPS mag tape (high-speed and low-speed)	Unless instructed otherwise hold on site until EOM +21 days then reuse/degauss/ destroy (as applicable).	Provide to requesters as applicable.
180	X	X	X	STPS printer hardcopy	Unless instructed otherwise hold on site until EOM +21 days then reuse/degauss/ destroy (as applicable).	Provide to requesters as applicable.
330	X	X	X	Voice recorder CD	Unless instructed otherwise hold on site until EOM +21 days then reuse/degauss destroy (as applicable).	Provide to requesters as applicable.
Telemetry						
530A	X			Digital mag tape	Unless instructed otherwise hold on site until EOM +21 days then reuse/degauss/ destroy (as applicable).	Provide to requesters as applicable.
530B	X			Digital mag tape	Unless instructed otherwise hold on site until EOM +21 days then reuse/degauss/ destroy (as applicable).	Provide to requesters as applicable.
532A		X	X	Digital mag tape	Unless instructed otherwise hold on site until EOM +21 days then reuse/degauss/ destroy (as applicable).	Provide to requesters as applicable.
532B		X	X	Digital mag tape	Unless instructed otherwise hold on site until EOM +21 days then reuse/degauss/ destroy (as applicable).	Provide to requesters as applicable.
535	X			Digital mag tape	Unless instructed otherwise hold on site until EOM +21 days then reuse/degauss/ destroy (as applicable).	Provide to requesters as applicable.
536A			X	OD (postlanding phase)	Unless instructed otherwise hold on site until EOM +21 days then reuse/degauss/ destroy (as applicable).	Provide to requesters as applicable

Table 11-1. MIL Data Requirements and Disposition (2 of 2)

DSS	LAU	ORB	LAN	Data Description	Disposition	
					Station	**GSFC Code 453**
Telemetry (cont)						
536B			X	OD (postlanding phase)	Unless instructed otherwise hold on site until EOM +21 days then reuse/degauss/ destroy (as applicable).	Provide to requesters as applicable
537	X			Digital mag tape (prelaunch)	Unless instructed otherwise hold on site until EOM +21 days then reuse/degauss/ destroy (as applicable).	Provide to requesters as applicable
538	X			Digital mag tape (prelaunch)	Unless instructed otherwise hold on site until EOM +21 days then reuse/degauss/ destroy (as applicable).	Provide to requesters as applicable
539	X			Digital mag tape	Unless instructed otherwise hold on site until EOM +21 days then reuse/degauss/ destroy (as applicable).	Provide to requesters as applicable
542	X			Digital mag tape	Unless instructed otherwise hold on site until EOM +21 days then reuse/degauss/ destroy (as applicable).	Provide to requesters as applicable
S-band						
603	X	X	X	RE processor printout	Hold for 30 days, then destroy.	
Television						
840	X	X	X	Video mag tape (raw)	Hold for 14 days, then destroy.	
841	X	X	X	Video mag tape (processed)	Hold for 14 days, then destroy.	

Table 11-2. PDL Data Requirements and Disposition

DSS	LAU	ORB	LAN	Data Description	Disposition	
					Station	**GSFC Code 453**
Telemetry						
530	X			Digital mag tape	Hand carry to MIL for site hold until EOM +21 days then reuse/degauss/destroy (as applicable).	Provide to requesters as applicable
536A			X	OD (landing phase)	Hand carry to MIL for site hold until EOM +21 days then reuse/degauss/destroy (as applicable).	Provide to requesters as applicable
536B			X	OD (landing phase)	Hold on station 7 days then degauss.	
537	X			Analog mag tape (prelaunch tape)	Hold 14 days, then reuse.	
538	X			Analog mag tape (prelaunch tape)	Hold 14 days, then reuse.	
542	X			Analog mag tape	Hand carry to MIL for site hold until EOM +21 days then reuse/degauss/destroy (as applicable).	Provide to requesters as applicable

Table 11-3. WFF Data Requirments and Disposition

DSS	LAU	ORB	LAN	Data Description	Disposition	
					Station	**GSFC Code 453**
Radar						
137		X		STPS mag tape (high-speed and low-speed raw data)	Hold 6 weeks, then reuse/destroy (as applicable).	
180		X		STPS printer hardcopy	Hold 6 weeks, then destroy.	
400	X	X		Low-speed data paper tape	Hold 14 days, then destroy.	
430	X	X		Mag tape	Ship to Code 453.	
458	X	X		Function/event stripchart	Ship to Code 453 at EOM.	
471	X	X		Tracking summary log AMS	Transmit postpass.	
Telemetry						
530	X			Analog mag tape	Unless instructed otherwise hold on site until EOM +21 days then reuse/degauss/ destroy (as applicable).	Provide to requesters as applicable
542	X			Analog mag tape	Unless instructed otherwise hold on site until EOM +21 days then reuse/degauss/ destroy (as applicable).	Provide to requesters as applicable
Miscellaneous						
991	X	X		Meteorological report	AMS hardcopy message only if required if DSS 430 is requested for shipment.	Provide to requesters as applicable

Table 11-4. WSMR Data Requirements and Disposition

DSS	LAU	ORB	LAN	Data Description	Disposition	
					Station	**GSFC Code 453**
Telemetry						
536A			X	OD (landing/ postlanding phase)	Unless instructed otherwise hold on site until EOM +21 days then reuse/degauss/ destroy (as applicable).	Provide to requesters as applicable
536B			X	OD (landing/postl anding)	Unless instructed otherwise hold on site until EOM +21 days then reuse/degauss/ destroy (as applicable).	Provide to requesters as applicable

Section 12. Station Communications Support

12.1 General

The information in this section supplements the STDN Network Operations Procedures for the Station Communications System, STDN No. 502.12.

12.2 Operating Procedures

12.2.1 General

All stations provide communications support for Space Shuttle as required. Off-station circuits description and usage are described in NASCOP and Sections 1 and 8 of this NOSP.

12.2.2 Voice Recorder Configuration

12.2.2.1

GN station voice recorder channel assignments are listed in Tables 12-1 and 12-2.

12.2.2.2

The voice recorder is turned on at time of station-to-NCC interface.

Table 12-1. Digital Voice Recorders Configuration for MIL/PDL

CHNL	Type: TEAC CR-500 Recorder No. 1 DSS No.: 330A
1	M & O LOOP
2	SITE COORD
3	JSC A/G-1
4	JSC A/G-2
5	GSFC UHF
6	259.7 MHZ UHF VOICE VERIFICATION
7	296.8 MHZ UHF VOICE VERIFICATION
8	MSN COMM COORD (CAPE COMM)
9	MCC COORD
10	GCC
11	GM COORD
12	TRACK COORD
13	JSC O/W
14	FR A/G 1
15	FR A/G 2
16	FR UHF
17	OIS 111
18	OIS 127
19	OIS 135
20	OIS 155
21	OIS 161
22	OIS 211
23	OIS 212
24	OIS 213
25	OIS 214
26	OIS 215
27	OIS 232
28	OIS238

CHNL	Type: TEAC CR-500 Recorder No. 2 DSS No.: 330B
1	M & O LOOP
2	SITE COORD
3	JSC A/G-1
4	JSC A/G-2
5	GSFC UHF
6	259.7 MHZ UHF VOICE VERIFICATION
7	296.8 MHZ UHF VOICE VERIFICATION
8	MSN COMM COORD (CAPE COMM)
9	MCC COORD
10	GCC
11	GM COORD
12	TRACK COORD
13	JSC O/W
14	FR A/G 1
15	FR A/G 2
16	FR UHF
17	OIS 111
18	OIS 127
19	OIS 135
20	OIS 155
21	OIS 161
22	OIS 211
23	OIS 212
24	OIS 213
25	OIS 214
26	OIS 215
27	OIS 232
28	OIS238

Table 12-2. Digital Voice Recorders Configuration for Wallops

CHNL	Type: TEAC CR-500 Recorder No. 1
1	SITE COORD
2	TRACK COORD
3	N/A
4	STS FLIGHT DIR OR ISS SITE COORD B/U
5	WLPS ORDERWIRE
6	N/A
7	ISS SITE COORD
8	N/A
9	UHF A/G 2 UPLINK
10	VHF 1 DOWNLINK
11	VHF 2 UPLINK
12	VHF 2 DOWNLINK
13	VHF 1 UPLINK
14	A/G 2 DOWNLINK
15	UHF A/G 1 DOWNLINK
16	UHF A/G 1 UPLINK
17	VHF 1 RF UPLINK (RECEIVER DOWNSTAIRS)

CHNL	Type: TEAC CR-500 Recorder No. 2
1	SITE CORD
2	TRACK COORD
3	N/A
4	STS FLIGHT DIR OR ISS SITE COORD B/U
5	WLPS ORDERWIRE
6	N/A
7	ISS SITE COORD
8	N/A
9	UHF A/G 2 UPLINK
10	VHF 1 DOWNLINK
11	VHF 2 UPLINK
12	VHF 2 DOWNLINK
13	VHF 1 UPLINK
14	A/G 2 DOWNLINK
15	UHF A/G 1 DOWNLINK
16	UHF A/G 1 UPLINK
17	VHF 1 RF UPLINK (RECEIVER DOWNSTAIRS)

Section 14. Air-to-Ground Communications

14.1 General

14.1.1
A-G communications support is provided by MIL/BDA (UHF only), DFRC, MIL, MIL/PDL, WFF, and WSSH.

14.1.2
Communications between the Space Shuttle and MCC are via STDN UHF or S-band.

14.1.3
Five mission phases are required for A-G support:

a. Prelaunch.

b. Ascent.

c. Orbit.

d. Landing.

e. Postlanding.

14.1.4
Station A-G capabilities are in accordance with equipment allocations in Table 14-1.

14.2 Voice Communication Modes

14.2.1 Space Shuttle Definition

Space Shuttle communication is defined as a particular combination of UL and DL frequencies. The system uses both S-band and UHF systems. S-band communications employ Duplex (DX) modes (different UL and DL frequencies). In addition, UHF employs Simplex (SX) modes (identical UL and DL frequencies). Refer to *STDN Network Operations Procedures for A-G Communications System*, STDN No. 502.14, for a complete description of the A-G communications system.

14.2.2 S-band

The S-band system serves the Space Shuttle via two S-band modes listed in Table 14-2. S-band is the primary voice circuit. The S-band system UL and DL voice mode support requirements are contained in Section 4 of this NOSP.

Table 14-1. Station A-G Equipment Allocations

Equipment Capability Summary	Station				
	DFRC	MIL	PDL	WFF	WSSH
UHF	X	X	X	X	X
S-band	X	X	X	X	

Station Callsigns

DFRC: Dryden Com Tech
WSSH: Salinas Peak Com Tech
MIL: MIL Com Tech
PDL: MIL Com Tech
WFF: Wallops Com Tech

14.2.3 UHF

The UHF system serves the Space Shuttle via four UHF modes (A, B, C, and D) listed in Table 14-2. UHF A-G voice is available during all mission phases. The station Com Tech will monitor the UHF 259.7-MHz (primary) frequency and the 296.8-MHz (secondary) frequency.

14.2.4 Technical Characteristics

A detailed description of the A-G communications system is given in the applicable systems manual, STDN No. 502.14 and the local Work Instruction.

Table 14-2. Shuttle Communications Modes

Mode	Freq (MHz)	
	UL	DL
S-band (nominal)	2106.4063	2287.5
S-band (backup)	2041.9479	2217.5
UHF-A (back SX)	296.8	296.8
UHF-B (primary SX)	259.7	259.7
UHF-C (emergency SX)	243.0	243.0
UHF-D (EVA/weather SX)	279.0	279.0

14.3 Operations Procedures and Configurations

14.3.1 Procedures

Equipment is operated in accordance with STDN No. 502.14 and the local WI.

14.3.2 Equipment Configurations

Equipment is configured in accordance with STDN No. 502.14 and the local WI.

14.3.3 A-G Configurations

14.3.3.1 ALPHA; Prelaunch (Throughput) Until SRB Ignition

MIL remote KSC A-G 1 Astrocom to JSC A-G 1, and KSC A-G 2 Astrocom to JSC A-G 2 MIL to JSC direct circuits. The UHF is remoted to the NISN through GSFC. JSC will build digital UL. Prelaunch and launch configuration is shown in Figure 14-1.

14.3.3.2 BRAVO; Ascent Throughput A-G

Nominal ascent phase at SRB ignition digital throughput UL and DL. MIL, PDL, WFF, and BDA handover A-G UHF at Houston Com Tech direction. GSFC Voice Control is responsible for configuration of UHF DL between MIL and WFF and remoting to the NISN Channels. (See Figure 14-2.)

14.3.3.3 CHARLIE; Flight Operations (Orbit) UHF

This configuration applies to any station with UHF capability. Com configuration CHARLIE is also used during TDRS support periods. (See Figure 14-3.)

14.3.3.4 DELTA; Flight Operations, Orbit (Throughput)

Nominal orbit is supported with a digital throughput UL and DL. Stations with UHF remote to A-G 2 longline. (See Figure 14-4.)

14.3.3.5 FOXTROT; Flight Operations, EVA

Stations under TDRS, with UHF and scheduled as backup to the SN, remote 259.7-MHz SX BRAVO to the A-G longline (same as configuration CHARLIE). (See Figure 14-5.)

14.3.3.6 GOLF; GN EVA/EMU (Throughput)

Normal (Extravehicular Activity (EVA) orbit support for GN stations equipped with throughput capabilities. Stations with UHF capability will remote SX BRAVO (259.7) MHz to the A-G 2 longline. (See Figure 14-6.)

14.3.3.7 HOTEL; Landing

Nominal landing at EAFB is supported with a digital throughput UL and DL. (See Figure 14-7.)

14.3.3.8 INDIA; Ground Operation, Postlanding

For postlanding at EAFB, UHF will be configured for monitor only at KSC. Configuration INDIA starts at crew egress. (See Figure 14-8.)

14.3.3.9 JULIET; Landing/Postlanding

In the event of a contingency landing at WSSH, Salinas Peak provides A-G UHF coverage for landing and KSC operations. (See Figure 14-9.)

14.3.3.10 KILO; Contingency Landing

In the event of a contingency landing, configuration KILO will be implemented a minimum of 2 hours prior to landing. (See Figure 14-10.)

14.3.3.11 LIMA; RTLS/KSC Landing/Postlanding

For a landing at KSC, stations will configure for a digital throughput UL and DL. UHF is remoted to A-G 2 longline. Houston Com Tech will request MIL to enable KSC after crew egress. (See Figure 14-11.)

14.3.3.12 Prelaunch/Landing Weather Aircraft Configuration

KSC, DFRC, and WSSH will remote the appropriate frequency assigned during the weather aircraft operations. (See Figure 14-12.)

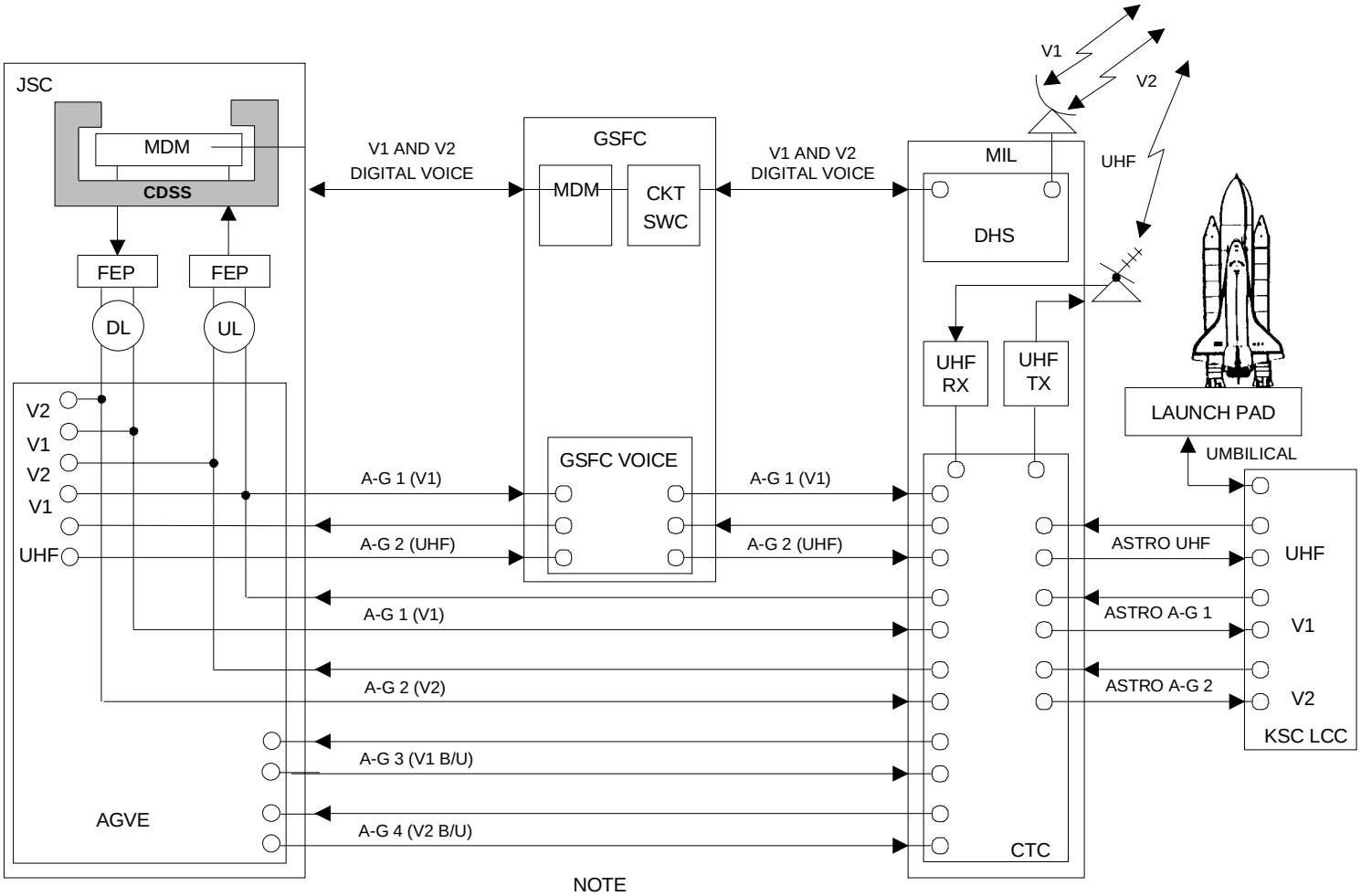

NOTE

1. CAPCOM SIMULTANEOUSLY UPLINKS A-G 1, A-G 2, AND UHF.
2. AT SRB IGNITION, MIL INHIBITS KSC UL (SEE CONFIGURATION BRAVO).

A2795061.dsf

Figure 14-1. Prelaunch (Throughput) Until SRB Ignition A-G Configuration ALPHA

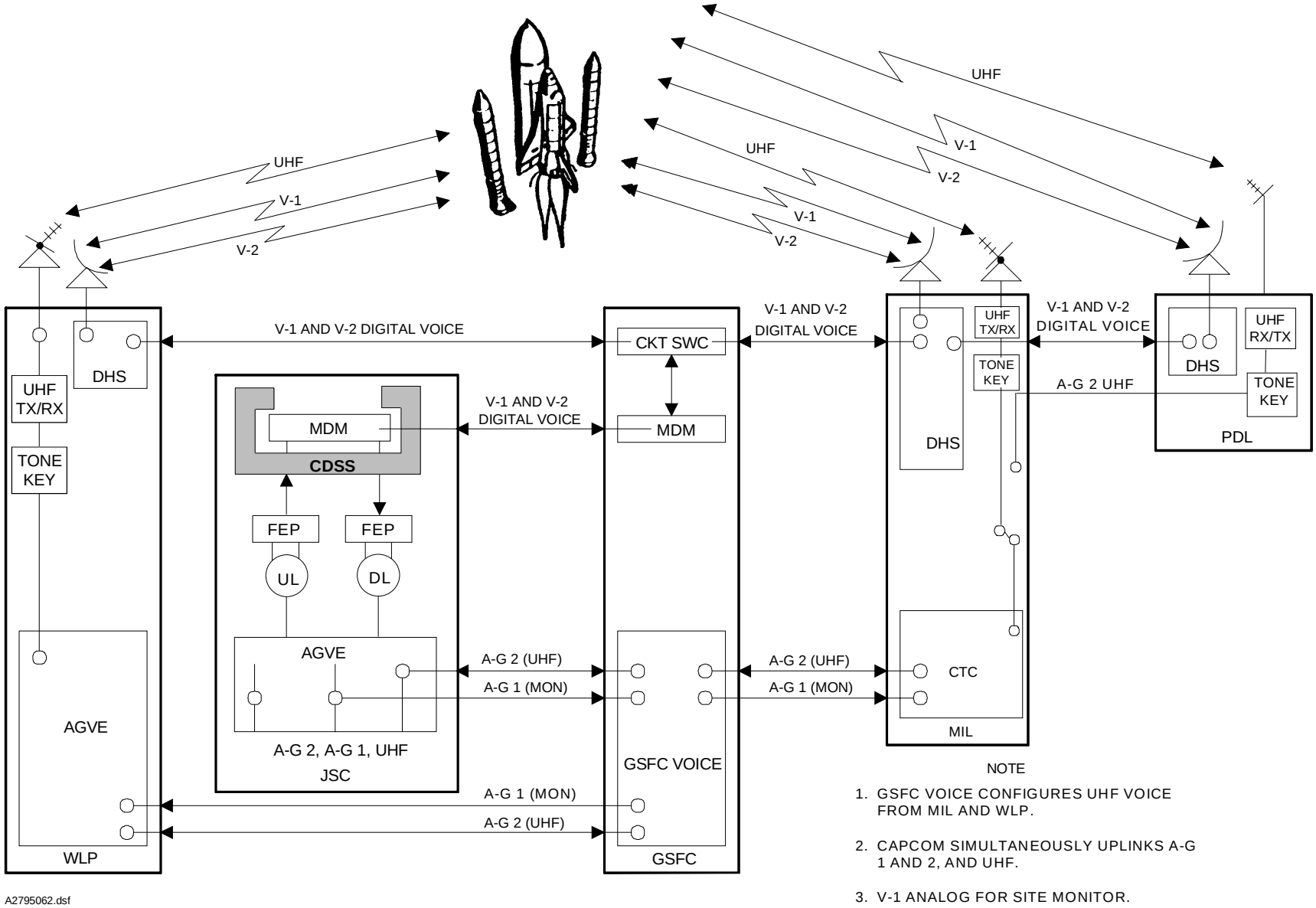

NOTE

1. GSFC VOICE CONFIGURES UHF VOICE FROM MIL AND WLP.
2. CAPCOM SIMULTANEOUSLY UPLINKS A-G 1 AND 2, AND UHF.
3. V-1 ANALOG FOR SITE MONITOR.

Figure 14-2. Ascent (Throughput) A-G Configuration BRAVO

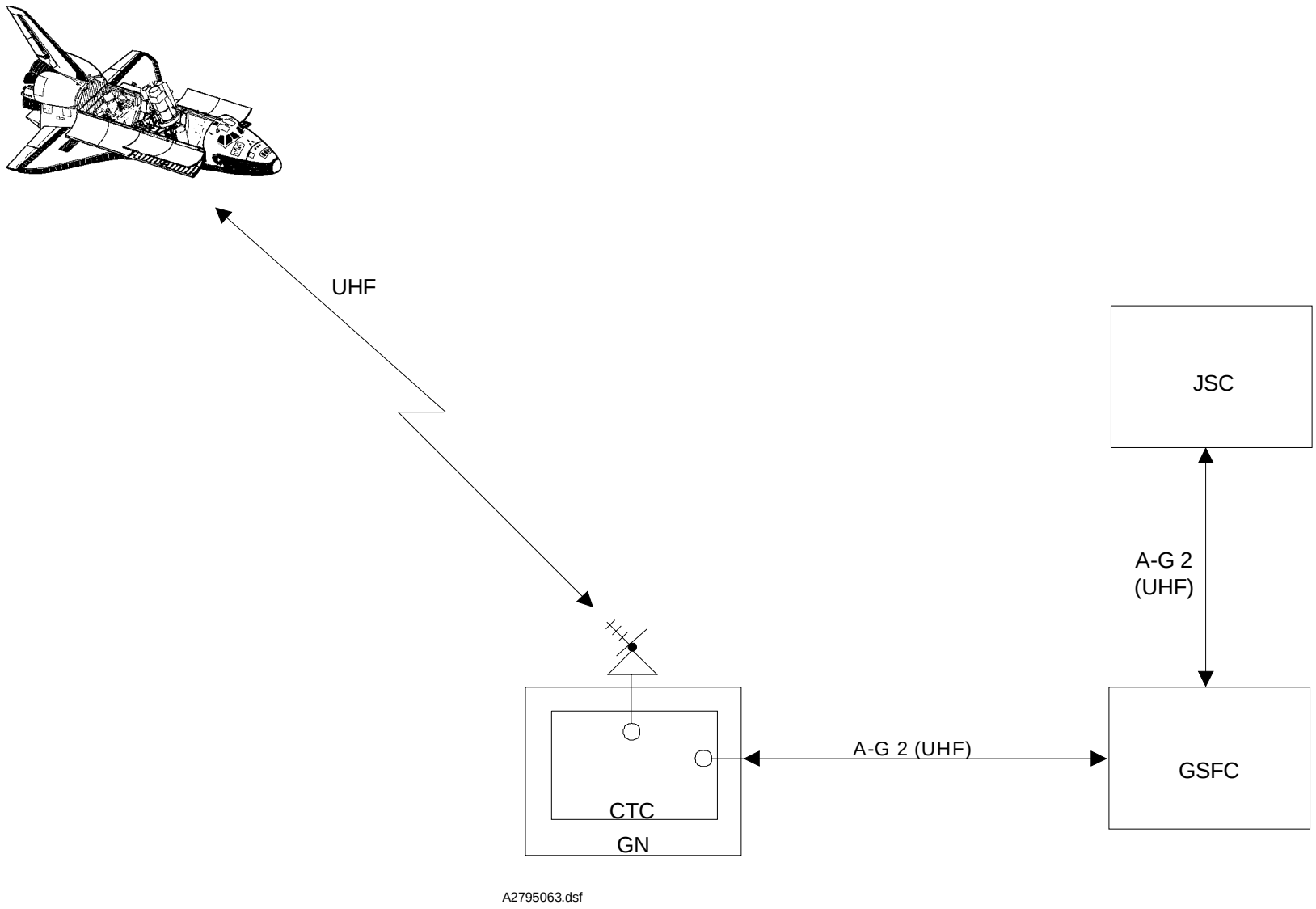

Figure 14-3. Flight Ops UHF Configuration CHARLIE

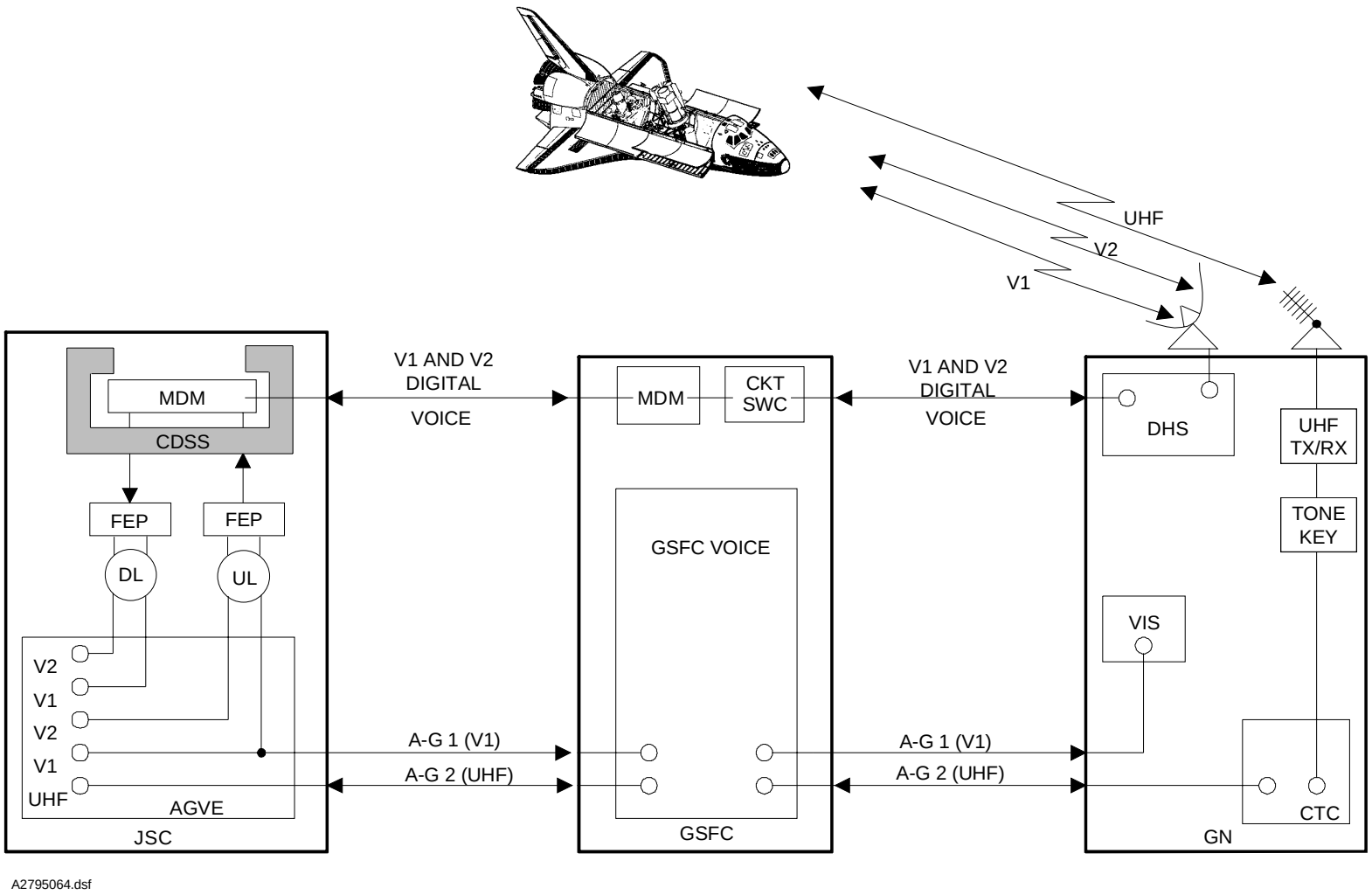

NOTE

THROUGHPUT:

GROUND NETWORK SITE WITH UHF REMOTE TO A-G 2 LONGLINE.

Figure 14-4. Flight Ops A-G Configuration DELTA

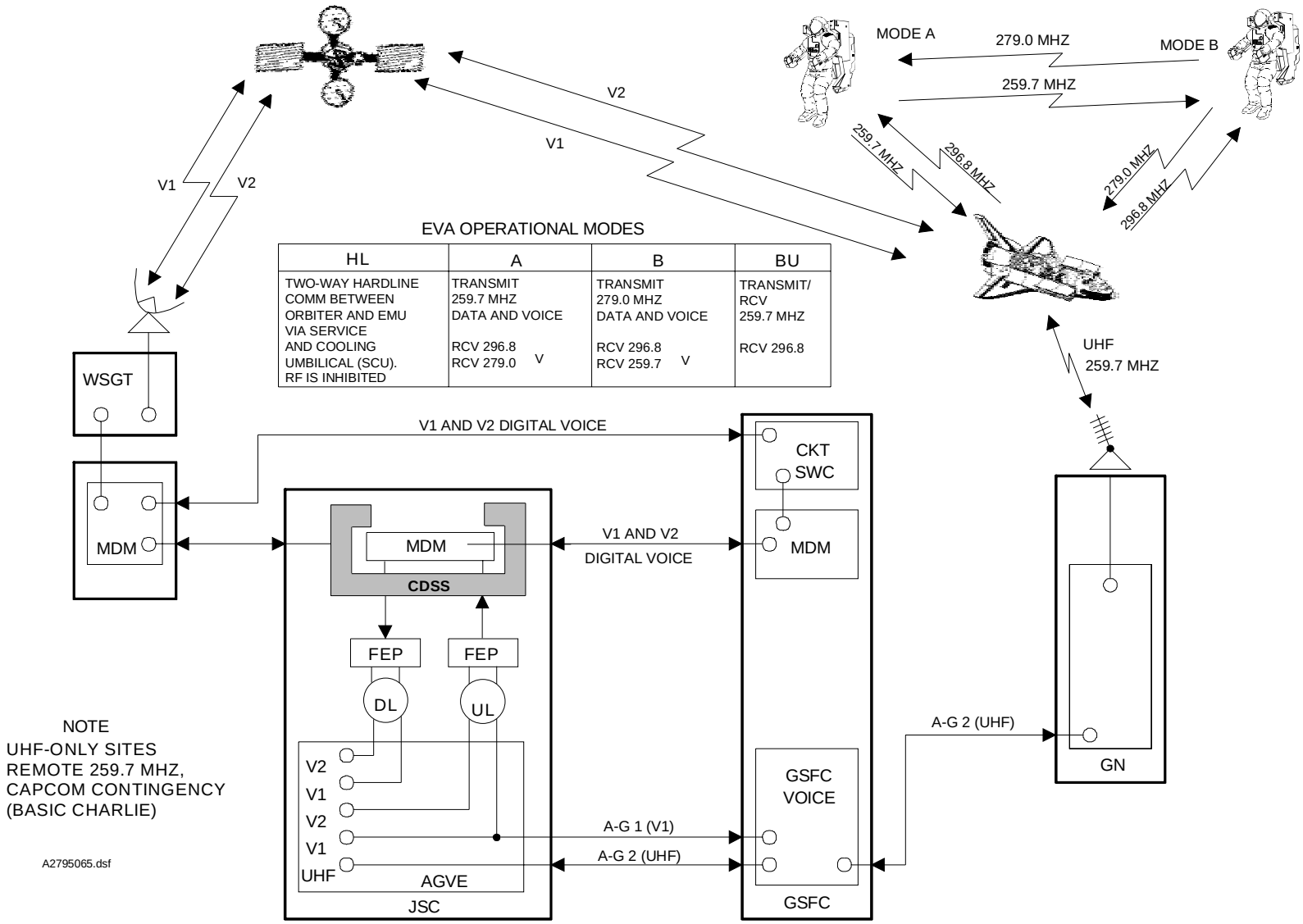

Figure 14-5. Flight Operations (EVA) Ops A-G Configuration FOXTROT

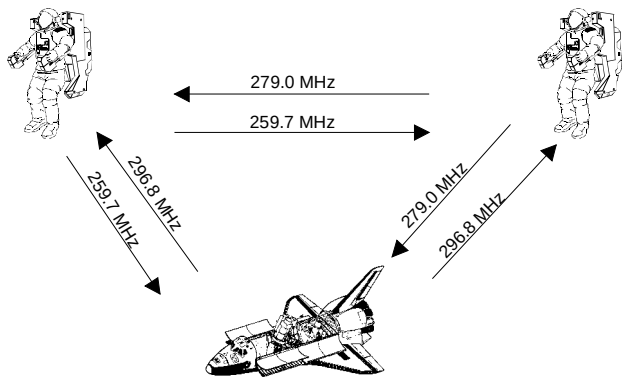

NOTE

1. SITES SCHEDULED FOR SUPPORT WITH UHF CAPABILITIES, WILL REMOTE UHF 259.7MHZ.
2. CAPCOM UPLINKS A-G 1 ONLY.
3. UHF H/O AT HOU COM TECH DIRECTION (CAPCOM CONTINGENCY ONLY).
4. V1 ANALOG FOR SITE MONITOR.

EVA OPERATIONAL MODES

HL	A	B	BU
TWO-WAY HARDLINE COMM BETWEEN ORBITER AND EMU VIA SERVICE AND COOLING UMBILICAL (SCU). RF IS INHIBITED	TRANSMIT 259.7 MHZ DATA AND VOICE RCV 296.8 V RCV 279.0	TRANSMIT 279.0 MHZ DATA AND VOICE RCV 296.8 V RCV 259.7	TRANSMIT/ RCV 259.7 MHZ RCV 296.8

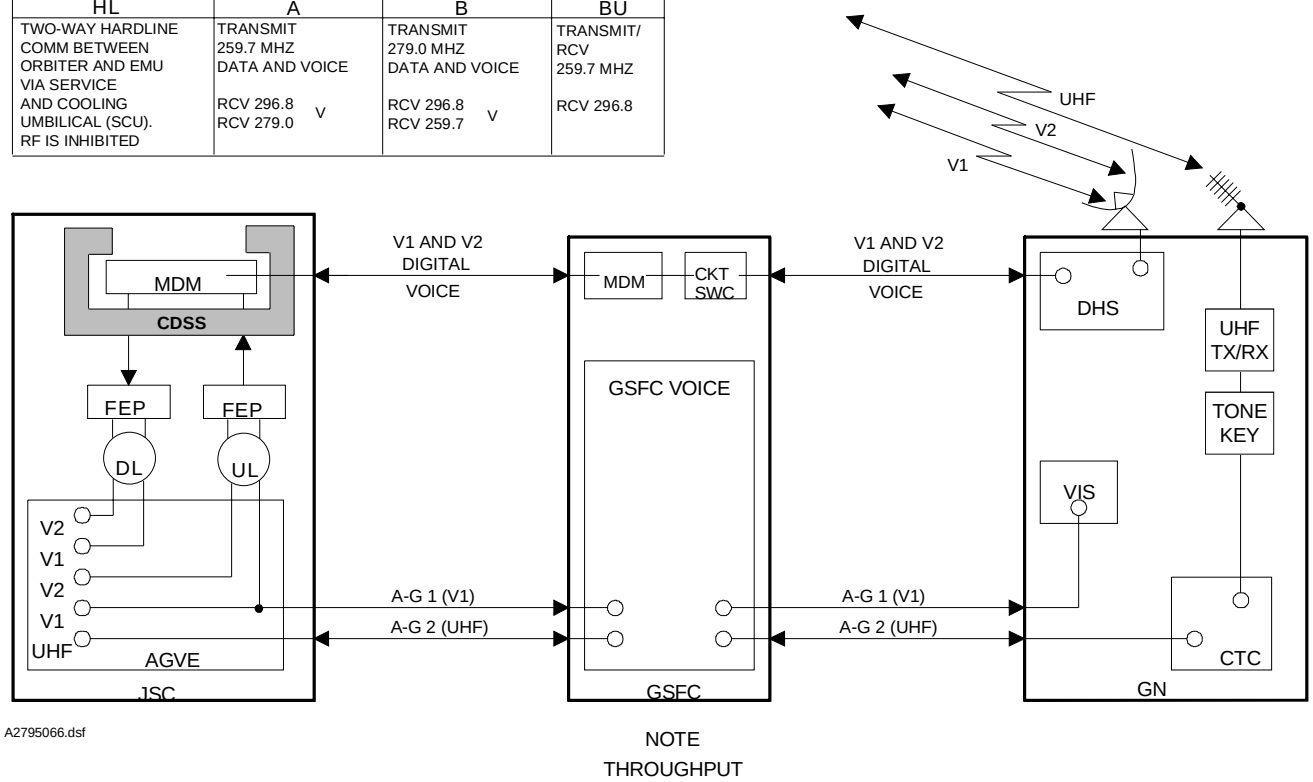

Figure 14-6. Flight Ops UHF Configuration GOLF

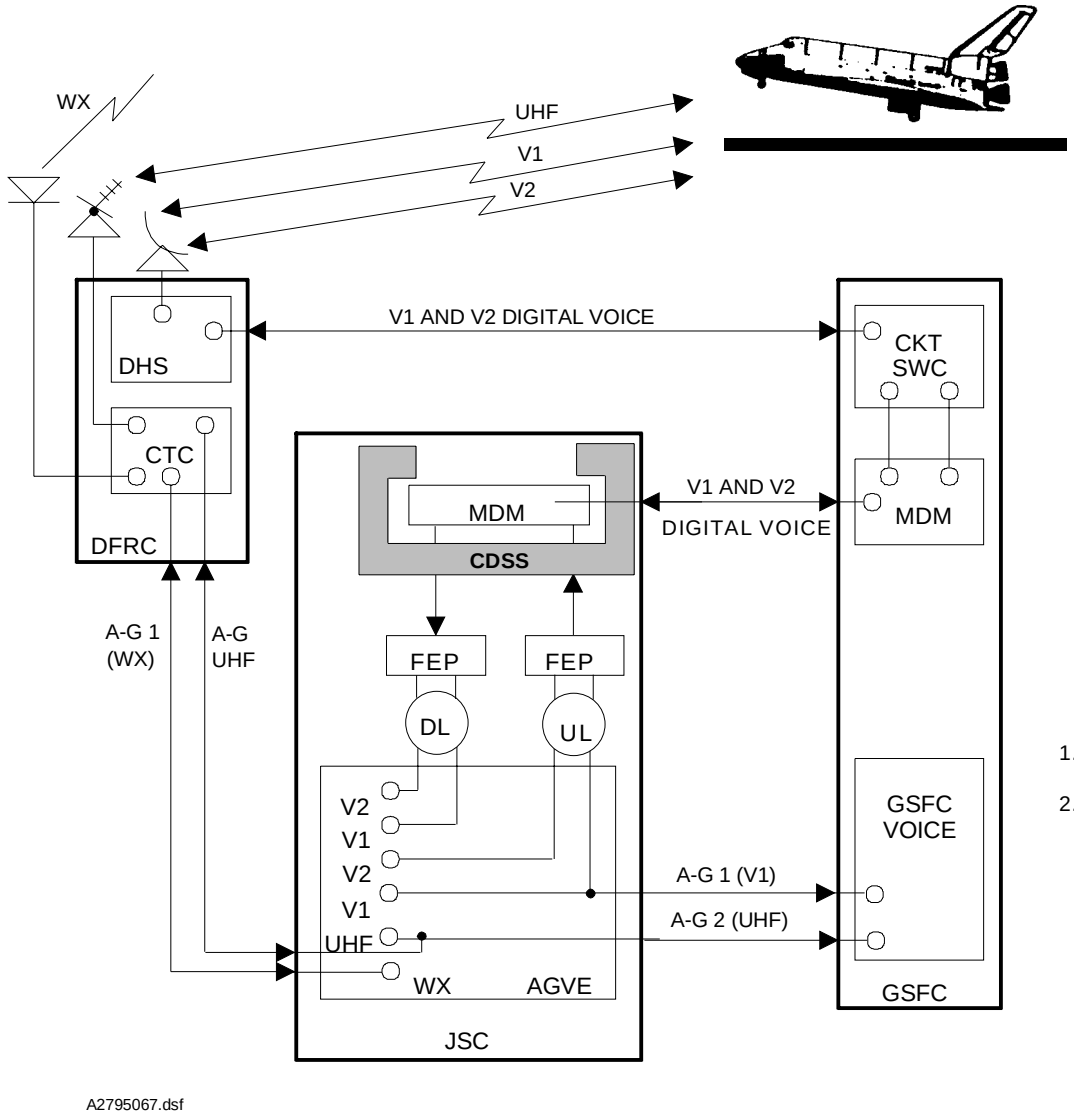

NOTE

1. CAPCOM SIMULTANEOUSLY UPLINKS A-G 1, A-G 2, AND UHF.
2. 279.0 MHZ UHF CIRCUIT EXTENDED TO WEATHER AIRCRAFT FOR PRELAUNCH AND LANDING

Figure 14-7. DFRC Landing A-G Configuration HOTEL

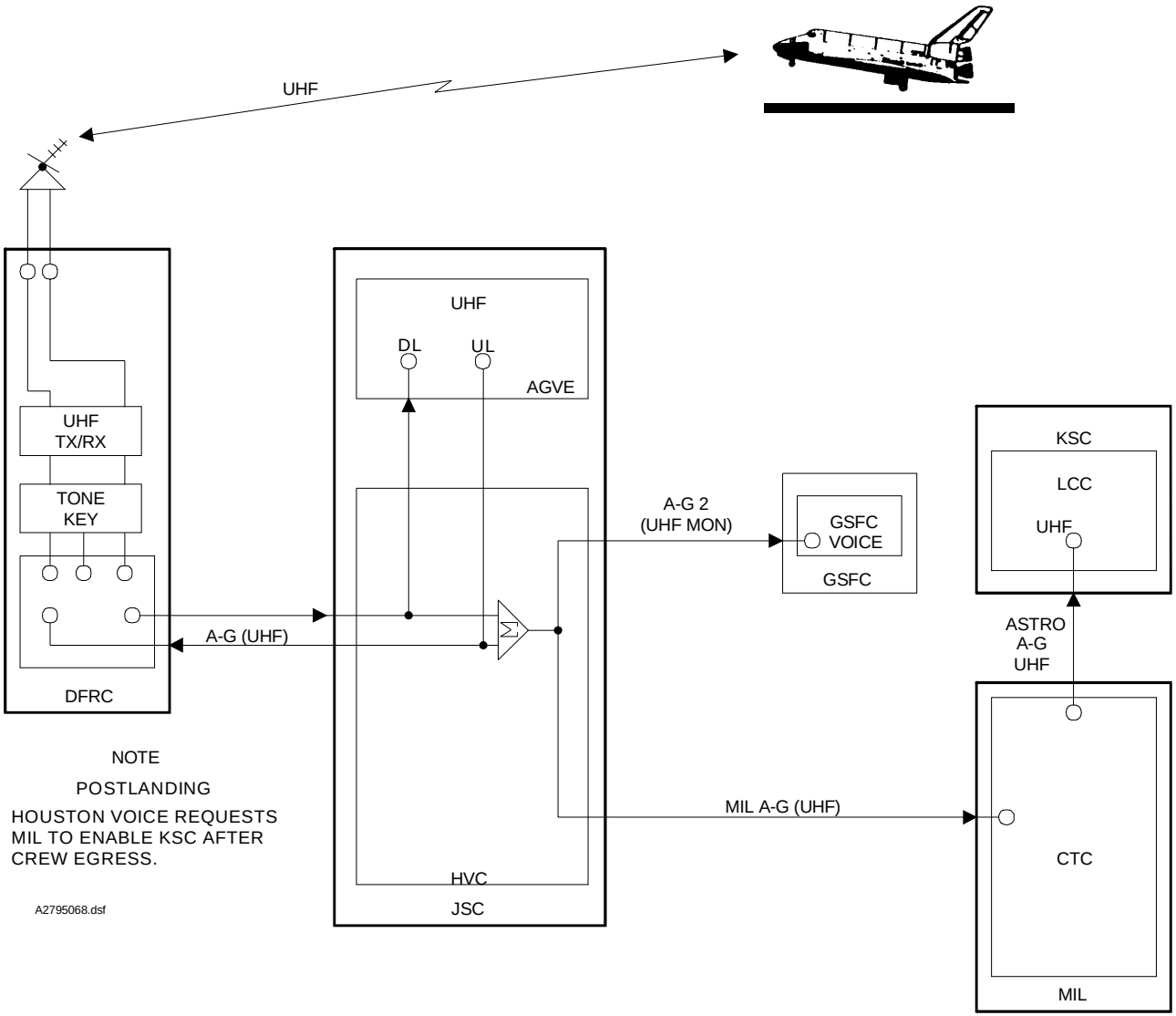

Figure 14-8. DFRC Postlanding A-G Configuration INDIA

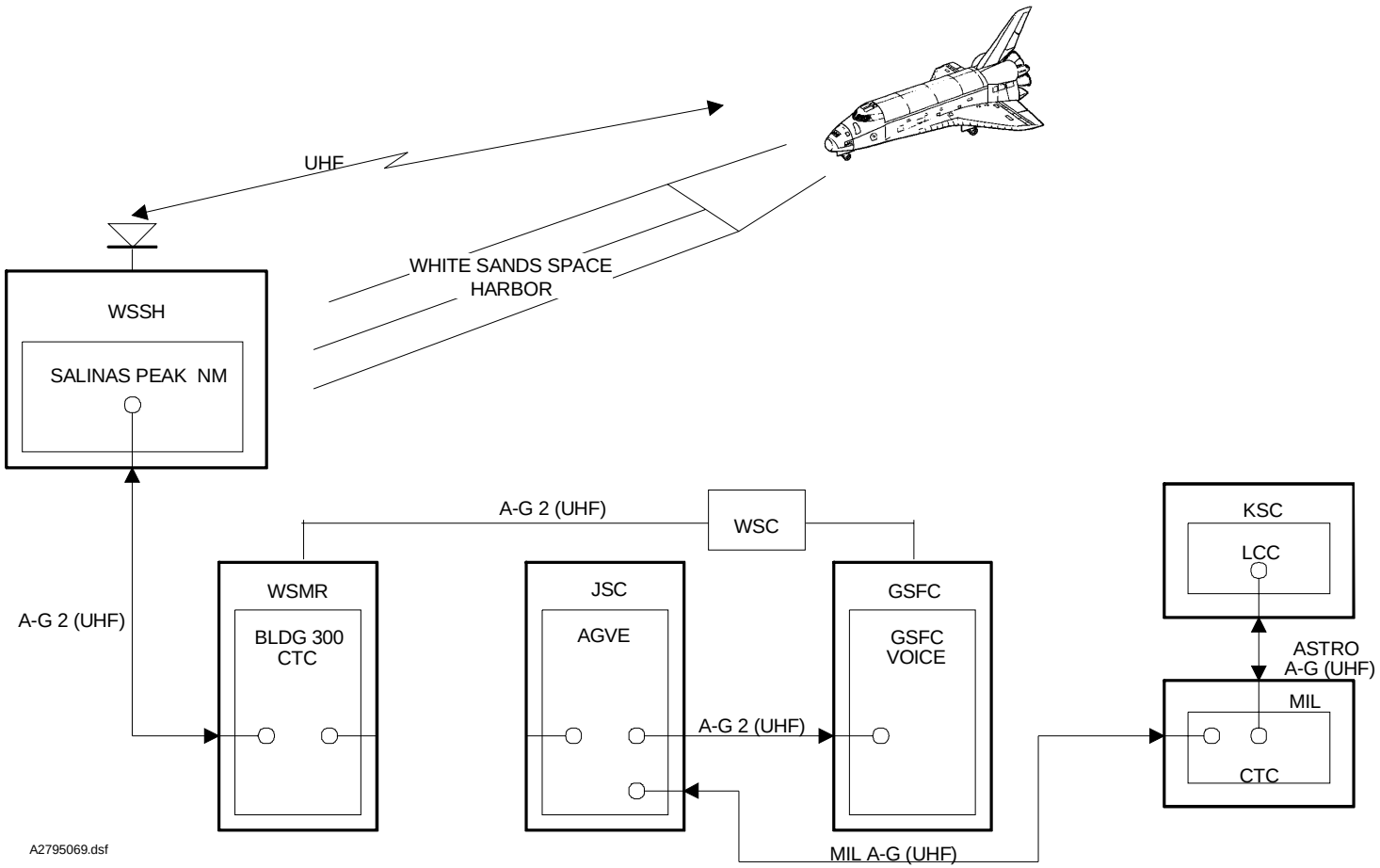

NOTE

1. KSC/MIL CONFIGURATION IS FOR POSTLANDING ONLY; AT CREW EGRESS MIL ENABLES KSC AT HOUSTON COM TECH DIRECTION.

2. 20 WATT TRANSMITTER CONFIGURED TO A DISCONE (OMNI ANTENNA).

Figure 14-9. WSSH Contingency Landing/Postlanding A-G Configuration JULIET

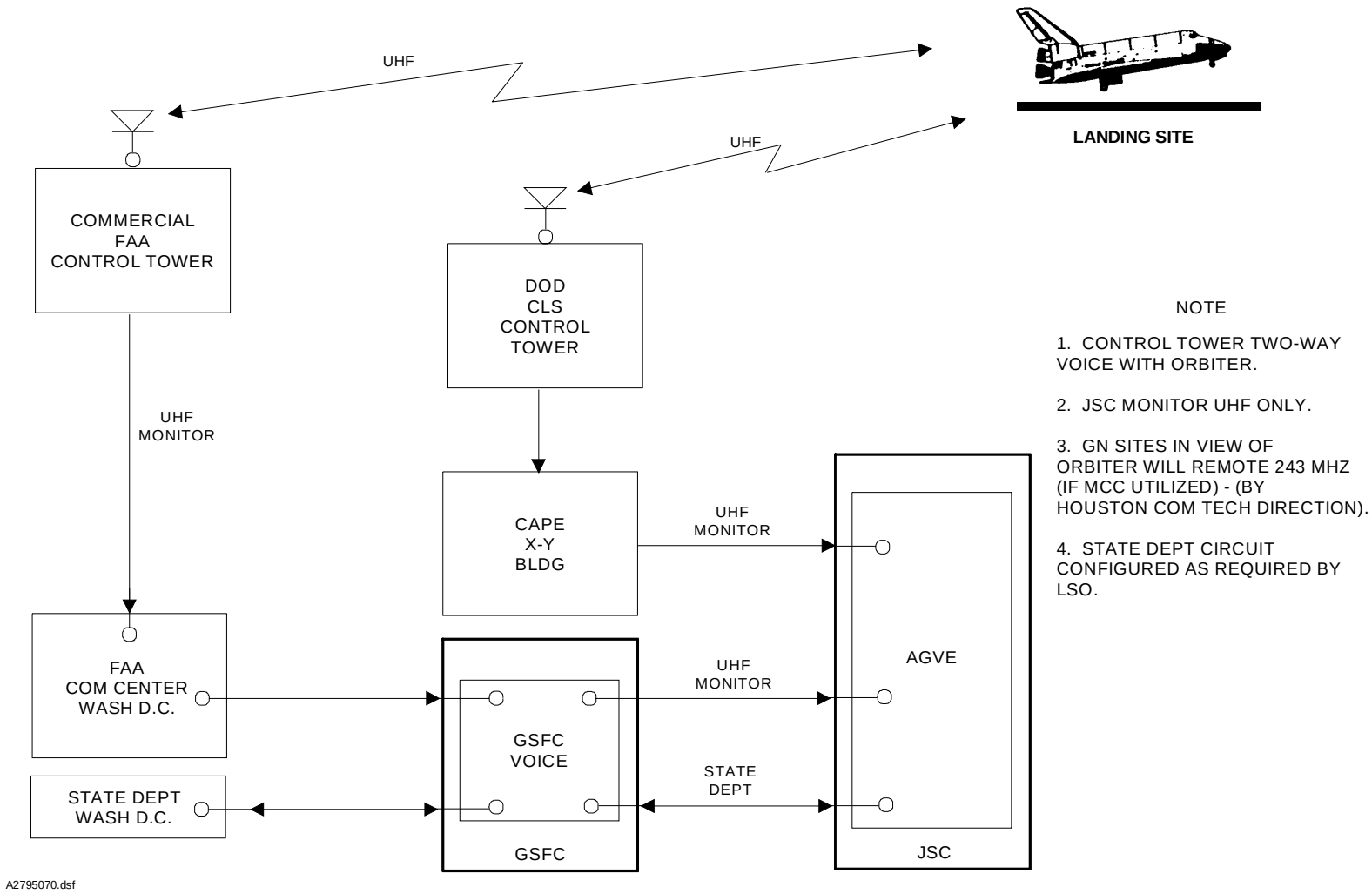

Figure 14-10. Contingency Landing A-G Configuration KILO

NOTE

LANDING:

CAPCOM SIMULTANEOUSLY UPLINKS A-G 1, A-G 2, AND UHF.

POSTLANDING:

HOUSTON COM TECH REQUESTS MIL TO ENABLE KSC AFTER CREW EGRESS.

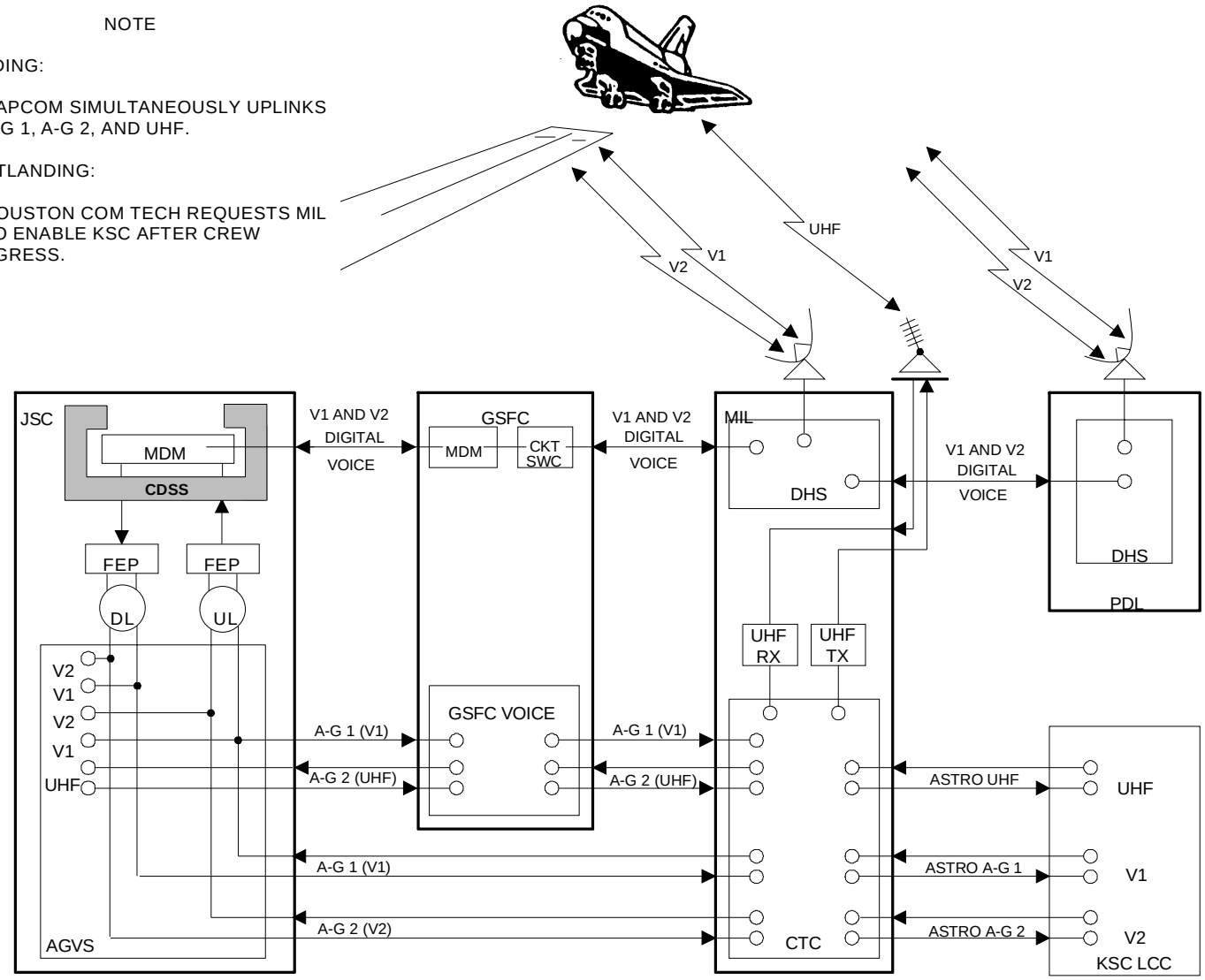

A2795071.dsf

Figure 14-11. RTLS/KSC Landing/Postlanding Configuration LIMA

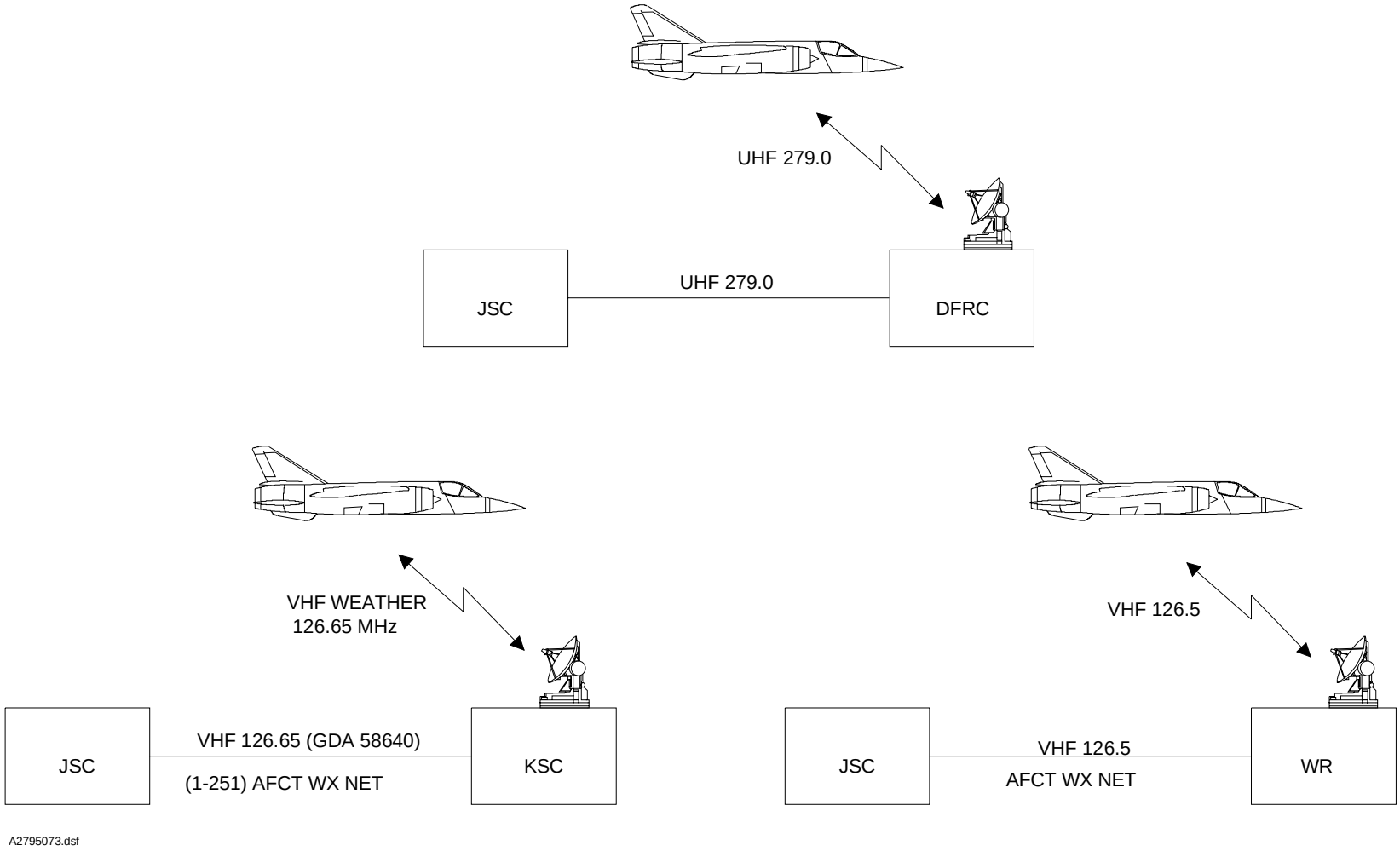

Figure 14-12. Prelaunch/Launch Weather Aircraft Configuration

Section 15. Timing

Synchronization of station timing systems is maintained in accordance with the STDN Network Operations Procedures for Timing Systems, STDN No. 502.15, and the IRIG Standard Time Format 200-70 for WR.

Section 16. NCC/Station Interface

16.1 NCC/Network Standard Operating Procedures

The procedures in this section supplement procedures contained in the *Network Control Center and Spaceflight Tracking and Data Network Station Interface Procedures*, 451-SIP-NCC/STDN, Volumes 1 and 2. In the event of conflicting procedures, this NOSP has precedence.

16.2 Documentation, Scheduling, and Reporting Standard Operating Procedures

Refer to Volume 2 of 451-SIP-NCC/STDN and/or applicable STDN Operating Interface Procedure documents between STDN/NCC and supporting control centers for standard documentation, scheduling, and reporting procedures.

16.3 Message Formats and Method of Transmission

16.3.1 General

a. There are two message formats used for Network Operational Messages. One format is teletype which is used for IIRV, 2-line Elements, Tracking Summaries, and a small number of other satellite tracking message types. The other format is E-mail, which is used for all other Network message traffic. The majority of E-mail messages are currently supported by the AMS; however, personal E-mail accounts may also be used for message delivery. The precedence indicator is not used for E-mail message formats.

b. In addition to, but not listed in the following heading format examples, the NCC Communications Center performs message distribution (local and Network E-mail and Facsimile delivery) via the Automatic Message Distribution System (AMDS) in combination with Listservers. Thus, any message addressed to "gcen@ams.gsfc.nasa.gov" is processed automatically via these systems and appropriate local and network distribution is performed.

16.3.2 Four-Letter Designators

Except for Teletype messages which are marked (Teletype), all of the four-letter designators appearing in the following message examples are AMS E-mail designators. (Example: "gcen" is "gcen@ams.gsfc.nasa.gov" and "hmsc" is "hmsc@ams.gsfc.nasa.gov")

16.3.3 Interim Support Instruction (ISI) Message

To: dsdc, gcap, gsic, gtas, gwcc, gwsc, vksc, grov, grcc, gcco, gfda, gphy, ghos, gaqd, commgr, ggfd, gcen

00/0000Z
FM NCC NASA GSFC GREENBELT MD

TO ALL
INFO GFRC/ATR/TSCO
COMMGR/OPS
GGFD/OPS
GSIC/R ZIMMERMAN
GSLE/AFSCN ONIZUKA AIR STATION CA MISSION DIRECTOR/5 SOPS/DO/LTOC
GWAC/M FILLIS CODE 832.3
ANBE/STADIR/STAOPS
GALA/J MCMAHON LMES/D BOWERMAN AI41/NASCOM POP/CDC
GCAP/RRS
GCCO/CSR OPS CONTROL
GDES/CODE 513.3
GFDA/B TURNER/W BLEVINS
LRID/STADIR/STAOPS
GHOS/SCHED/MSFC OPS/COMM/EO32
GCEN/RUWODOR/IRO ONIZUKA AS CA
GCEN/RHHMUNE/JFMO PAC HONOLULU HI
GDNS/45 RANS CCAFS FL//DOS//
GRCC/LRCC/CSR 3304
GROV/30 RANS VAFB CA//DOF//L KOERTGE
GTAS/FF-R-C
GWCC/FSC VAFB CA/OCC
GWSC/OPS
HMSC/GC OFFICE DB/C RUSSELL A BLANCHARD USH-423H/C THOMPSON
USH-443E/L ROCHE USH-443F/R CHEN USH-443G
VKSC/PH-J NASA COMM/GYCC-GYSS COMM CONTROL AND SCHEDULING USK-145/COMM
REQUIREMENTS-USK-109/KICS G. GRAY USK-216/STM USK 299
USK-145/COMM REQ USK-109/KISC G GRAY USK-216/STM USK-299
GTPC/SCHMIDT/BRAMBOA
GPHY/MANRIQUEZ/BOOTH
GAQD/ADO

ISI
ISI NR. 001 MXXXX--MS STS-XX

16.3.4 Request for Information or Clarification (RIC)

16.3.4.1 RIC

To: dsdb, gcen, hmsc

00/0000Z
FM OPSR
TO GCEN/NOM
INFO HMSC/GC/SIM NET-DG4

RIC MIL 0101 MXXXX-STS-XX
Subject: 601/Space Shuttle

16.3.4.2 RIC Answer

To: dsdb, hmsc

00/0000Z
FM NCC
TO GMIL/OPSR
INFO HMSC/GC

RIC ANS 0101 MXXXX-STS-XX
Subject: 601/Space Shuttle

16.3.5 Documentation Change Notice (DCN) General Header Format

To: dsdc, gsic, gcnv, gcco, grov, grcc, gnlv, gcen, gops, gwsc, gtas, ghos, gwcc, gwsc, commgr, ggfd

00/0000Z
FM NCC NASA GSFC GREENBELT MD
TO ALL
ANBE/STADIR/STAOPS
GWAC/M FILLIS CODE 832.2
GFRC/ATR/TSCO
GSLE/AFSCN ONIZUKA AIR STATION CA MISSION DIRECTOR/5 SOPS/DO/LTOC
INFO HMSC/GC/B JUDD/DOCUMENTATION/SIMNET-DG4
GALA/J MCMAHON LMES/D BOWERMAN AI41/NASCOM POP/CDC
GHOS/SCHED/MSFC OPS/COMM
GDES/CODE 562.2
GSIC/OPSR/R ZIMMERMAN
GNLV/CSR PROGRAM MGMT
GWSC/OPS
GCCO/OPS CONTROL
GCEN/RUDGAAA/CSR 6400 PATRICK AFB FL//3100//
GCEN/RUWQAAA/ITT FEDERAL SERVICES VANDENBERG AFB CA//MCS//
GCEN/RUWQAAA/ITT FEDERAL SERVICES VANDENBERG AFB CA//NIPLAN//
GCNV/ROCC
GROV/30 RANS VAFB CA//DOF//W RUEBSAMAN
GWCC/FSC/VAFB CA/OCC
COMMGR/OPS
GGFD/OPS
GRCC/LRCC
GTAS/FF-R-C
LRID/STADIR/STAOPS

DCN
STDN NO. 601/Space Shuttle

16.3.6 Operations (OPN) Message

To: gcen

00/0000Z
FM OPSR
TO GCEN/NOM
INFO (as applicable)

16.3.7 Station Equipment Status Report (ESR)

To: gcen, gdps, gunv, hmsc

00/0000Z
FM OPSR
TO GCEN/NCC
INFO GCEN/NOM
HMSC/GC

ESR MIL. . . .

16.3.8 Problem Report (PRT) Message

To: gcen, gdes, gunv, gvax, gphy

00/0000Z
FM OPSR
TO GCEN/NCC
INFO GCEN/SCHEDULING

PRT MIL

16.3.9 Computer Software, Hardware Anomaly Message

To: gcen, commgr

00/0000Z
FM GMIL
TO GCEN/NCC

16.3.10 Radio Frequency Interference (RFI) Report Message

To: gcen, hmsc

00/0000Z
FM OPSR
TO GCEN/NCC/NOM
HMSC/GC

RFI RID

16.3.11 Spacecraft/Vehicle Anomaly (SVA) Report

To: gcen, gfrc, gunv, hmsc

00/0000Z
FM OPSR
TO GCEN/NOM
HMSC/GC

SVA
Spacecraft Vehicle Anomaly

16.3.12 Space Shuttle Contingency Plan (SCP) (Sample)

To: gcen

00/0000Z
FM HMSC/FLIGHT DIRECTOR
TO GCEN/NETWORK DIRECTOR

Subject: Space Shuttle Contingency Plan

a. The Space Shuttle Contingency Plan is in effect as of (---------- GMT). All recordings of telemetry data, plotboard charts, trajectory data, voice recordings, weather reports, operator logs, radar tapes, command recordings and histories, acquisition aid data, signal strength recordings, photographs, etc. from the period ------- GMT to -------- GMT are to be considered as Official information and handled accordingly.

b. Site personnel are forbidden to make news releases, public or private statements concerning a mission contingency, or release any data without specific approval from the Network Director.

16.3.13 Data Shipment Advisory Message

To: gcen, hmsc

00/0000Z
FM OPSR
TO GCEN/NCC
INFO HMSC/FD-2 DATA DISTRIBUTION CENTER

Subject: Data Shipment Advisory

16.3.14 Support Request Message

To: hmsc, dfrc, commgr

00/0000Z
FM NCC
TO DFRC/OPS
INFO HMSC/SCHEDULING/GC
COMMGR/OPS

SUBJECT: MXXXXLS (STS-XX) SUPPORT REQUEST FOR 990520 THRU 990520.
BASED ON LAUNCH AT 05/20/1331Z

DATE	STA	COMM START	H-30	AOS	LOS	STOP RELEASE	COMMENTS
05/20	DFRC	1530	1545	1635	1644	1727	B/U TO TDRS O/N 03
	DFRC	N/A	1727	1757	1817	1817	PLS O/N 04

POINT OF CONTACT:

16.3.15 Briefing Message Request

To: gcen

00/0000Z
FM HOUSTON GC
TO GCEN/NOM/SMM

Request for Briefing Message for the STS-XXX data flow scheduled for xx May xxxx.

a. Participants

b. Objective

c. Support Times

d. Configuration Parameters

e. Documentation

f. General

g. Data Circuits

h. Voice Circuits

i. Test results reports will be provided to gcen/STS NOM.

j. Points of Contact

16.3.16 Tracking Summary Message (Teletype) - C-band Message Format

OO GCEN GRCC HMSC
DE GVNB (NASCOP ROUTER FOR TRACKER)
00/0000Z
FM 30 RANS RCO (AS APPLICABLE)
TO GCEN/NCC
INFO
GRCC/LRCC
HMSC/TRACK

SITE (JSC Code) REVOLUTION
SIC DTG OF EXPECTED AOS/LOS

a. ACQUISITION SOURCE IRV-DTG -----, INP-DTG ------, OTHER - SPECIFY

b. TYPE OF SCAN USED/LIMITS OF SCAN.

c. INITIAL AUTOTRACK TIME/RANGE IN KYD/COMMENTS IF ANY, ON THIS SUBJECT.

d. PCA TIME/RANGE KYD/MAX EL.

e. FINAL LOS - AUTO TRACK TIME/RANGE IN KYD.

f. LOST TRACK/REACQUIRE TRACK/LOST TRACK/REACQUIRED.

g. WAS APPARENT VALID DATA OBTAINED/APPROXIMATE NUMBER OF SECONDS.

h. SIGNAL APPRAISAL/AVERAGE AGC/TUMBLE RATE/DEPTH OF NULL.

i. OPERATOR'S APPRAISAL OF POINT DATA ACCURACY.

j. SITE WEATHER DATA FOR REFRACTION CORRECTION: WET ----, DRY ----, PRESSURE MB/----- IN

k. RADAR CONFIGURATION: LOOP GAIN ---, PULSE WIDTH ---, PARAMPS ---, TX POWER ---, FREQ. -----, PRF ---, REFRACTION CORRECTION IN/OUT -----.

l. COMMENTS

16.3.17 Video Activity Report (VAR) Message

16.3.17.1 General

The Video Activity Report message is sent only if a station receives DL video.

16.3.17.2 Sample Message

To: gcen, hmsc

00/0000Z
FM OPSR
TO HMSC/HOUSTON TV
INFO GCEN/NCC

VAR MXXXXMS
VIDEO ACTIVITY REPORT

SEQUENCE-SEGMENT:
VIDEO START:
STOP:

VIDEO QUALITY: 5
VOICE QUALITY: 5

16.3.18 MIL-originated S-band CRF Message (Non-nominal) (Teletype)

OO GCEN GDRO GRCC
DE GMIL 013
00/0000Z
FM OPSR
TO GCEN/NOM
INFO GDRO/TRK
GRCC/LRCC/CSR 3304

CRF MXXXX--

LINK	FREQ	PCM-B/R	DEVIATION
OD	2217.5 MHz	HIGH 182.0 kb	N/A

16.3.19 Space Shuttle Launch Count Status

To: dsdc, gcen
00/0000Z
FM HOUSTON GC
TO ALL

Subject: Space Shuttle Launch Count Status

At GMT of 335:08:16:00/335:08:16:00

The STS-XXX Launch Count is T-Minus 02:04 and holding. Estimated length of hold is 01:00

16.3.20 Space Shuttle Liftoff Time

To: dsdc, gcen
00/0000Z
FM HOUSTON GC
TO ALL

Subject: STS-XXX Liftoff Time

STS-XXX Launch from MXXXX-- Occurred at GMT of 335:12:30:00.002/335:12:30:00.002

16.3.21 DOD Weather Report

(Teletype)

OO HMSC
DE GKAP 013
00/0000Z
FM GRCC/LRCC/CSR 3304
TO HMSC/TRACK AND NAV SUPPORT
SUBJECT: C-BAND RADAR SITE WEATHER DATA FOR SHUTTLE

SITE	WET	DRY	PRESS (Mb)	TIME Z
MLAC	68	74	1023.0	1334
WLPC	47	57	1030.9	1343

16.3.22 Station Postmission Reporting Message (PSS)

16.3.22.1 General

All stations are required to submit a consolidated terminal count and orbit-by-orbit summary of station Space Shuttle support for all scheduled activities. This report will be transmitted to the ND within 24 hours following the Space Shuttle landing. This information will be used to supplement NCC data for a comprehensive report to NASA management that is due within 72 hours after landing.

16.3.22.2 Message format

(E-mail)

To: dsdb, gcen, ggfd, hmsc, commgr, jftl

00/0000Z
FM STADIR
TO GCEN/SHUTTLE ND
INFO ALL STADIR/OPSR
GCEN/SHUTTLE NOM/SMM/NIA
GGFD/OPS
COMMGR/OPS
HMSC/GC/SIM NET-DG4
JJPL/J HODDER/R GILLETTE/COMM CONTROL
JFTL/MPSETI

PSS
Subject: STS-XXX Support Summary

a. General (include any comments of a general nature regarding the mission; include a listing of those supported successfully and without problems).

b. Recap of problems

   1. Terminal count.
   2. Orbit number.
   3. Statement of problem experienced.
   4. Resolution (include actions taken which resulted in correction of the problem).
   5. Action remaining or assistance required (where final resolution of the problems has not been made, include your anticipated actions and ETRO).

c. Documentation problems and recommendations (include any problems and recommendations pertaining to mission documentation).

d. Communications problems and recommendations (identify any problems with NISN circuits, site messages, E-mail message delivery, etc., and include your recommendations).

e. Procedure problems and recommendations (identify any problems with NISN circuits, site messages, E-mail message delivery, etc., and include your recommendations for improvements in operations procedures).

Section 17. Equipment Modifications

17.1 General

GN equipment modifications required for Space Shuttle support are defined and communicated to required stations by appropriate AMS. Biweekly status reports for required Engineering Changes (ECs) are normally requested from the supporting stations; report frequency is subject to change as testing, simulations, etc., may dictate.

17.2 STDN Implementation Schedule

17.2.1 General

Implementation schedules for the continuing GN equipment modifications, new system installations, and station reconfigurations are defined by the STDN Implementation Schedule, STDN No. 812. These equipment modifications, new system installations, and station reconfigurations are planned and implemented to augment and provide GN stations with basic capabilities for supporting all current and future spaceflight missions. STDN No. 812 schedules are supplemented by appropriate mission-required EC lists for mission-peculiar equipment modifications and configurations that are generated for specific mission tracking and data acquisition support requirements.

17.2.2 Configuration Freeze

Station configuration will not be changed after L-7 days without specific authorization by the GSFC/ND. Stations will ensure that all ongoing engineering changes have been completed and tested prior to L-7 days. Changes to comply with Space Shuttle mission requirements that are not received prior to L-7 days will be coordinated with the ND via TELECON or priority message prior to breaking configuration.

17.2.3 Exemptions

Stations may submit requests to continue work and to start work on any EC installation that does not affect any Space Shuttle equipment or configuration. Examples of this would be logistics terminals, command encoders for non-Space Shuttle missions, and work on redundant spare cards or equipment. These requests should be submitted to GCEN/ND/SPS not later than L-7 days, and will identify work to be done and any possible Space Shuttle impact statements.

17.3 Engineering Changes

The mission-required EC list is subject to additions and deletions as implementation and mission requirements change, and will be updated as necessary.

17.4 Request for Modification

Each Request for Modification generated for modification of GN station internal instrumentation configurations and equipment, and, when applicable, to Space Shuttle series mission support, is processed in accordance with Section 4 of STDN Network Operations Procedures for Configuration Control, STDN No. 502.17.

17.5 Other Equipment Modifications

The list of mission-required equipment modifications is updated by ISI as appropriate during mission support periods.

17.6 Status Reports

The status of required EC implementation is monitored and maintained via regular EC status reports provided by the applicable GN stations in accordance with Section 2 of 451-SIP-NCC/STDN, unless otherwise directed.

Section 25. Television

25.1 General

25.1.1 Space Shuttle Closed-Circuit Television System

The standard Space Shuttle Orbiter Closed-Circuit Television (SSO CCTV) system is described in Section 2 of STDN No. 502.25.

25.1.2 Station Television Systems Station Configuration

25.1.2.1

Station configurations are in accordance with STDN No. 502.25.

25.1.2.2

DFRC and MIL receive, process, and record real-time and dump TV transmissions from the Space Shuttle as scheduled and, on request, remote TV audio (MIL only) and video via satellite links to JSC/MCC and GSFC/NCC. The audio signal remoted with the television is the DL side of either A-G 1 or A-G 2. The DL side of A-G 1 and A-G 2 is made available to the TV system audio patch panel from MIL Com Tech console.

25.2 Operating Procedures

25.2.1 Prepass Validation

a. Satellite link checks will be completed by the Com Mgr prior to H minus 30 minutes. At H minus 30 minutes, the Com Mgr/Goddard TV advises NCC TV and Houston TV on TV conference of the audio/video link status and turns the links over to NCC TV for I/F checks. NCC TV completes I/F checks prior to H minus 20 minutes and turns the links over to Houston TV for I/F and operational support. I/F activities are conducted as follows:

   1. A TV H minus 30 minutes I/F (refer to Table 1-14) will be performed when scheduled as set forth in paragraph 1.3.7.

   2. An abbreviated H minus 30 minutes interface may be required due to time constraints.

   3. The TV H minus counts will progress toward a scheduled T-0 time. The T-0 time will not necessarily reflect AOS times at each STDN station unless the pass is a single station TV pass.

b. General operating procedures are in accordance with STDN No. 502.25.

25.2.2 Video Recording Requirements for VO-5600 VCRs

a. VCR Recorder No. 1: processed video from the online processing system of the station TV system.

b. VCR Recorder No. 2: processed video from the offline processing system of the station TV system.

25.2.3 Audio Recording Requirements for VCR Audio Track

a. Audio-1: conferenced A-G 1.

b. Audio-2: conferenced A-G 2.

c. Audio levels should peak at 0 VU as observed on the associated VU meter of the TV audio distribution system.

d. Audio levels should be set prepass using a 1-kHz tone set to a level of 0 VU as measured on the TV audio system output VU meter. The appropriate VCR input audio amplifiers should be adjusted to provide an output level of 0 VU with this test tone applied to the input. The tone should be provided from the MIL Com Tech Console (CTC) when possible to validate the line as well as set the level of the amplifiers. A -10 dB audio signal should be received at the earth station.

NOTE

A-G 1 and A-G 2 are provided as inputs to the TV system audio amplifiers from the MIL CTC.

25.2.4 Video and Audio Recording and Playback Procedures

Video and audio recording and playback procedures are as established in STDN No. 502.25 and the local Work Instruction.

25.2.5 VTR Dump at STDN Station Procedures

Time base jitter problems resulting from launch stresses on the SSO CCTV system VTR may create a significant problem for STDN processing of the signal. The following procedures will be used when a VTR dump is received at a STDN station:

a. The TV technician will closely monitor the processing system output on the system output waveform monitor when notified by Houston TV that a VTR dump is in progress or about to be initiated.

b. Time base instabilities will be evident in the horizontal line display on the waveform monitor as variations in the start of active video line time in relation to the processing system sync signal.

c. Time base instabilities may also be observed on the picture monitors, appearing as horizontal "tearing" of the picture.

d. The TV technician will perform the following steps if time base instabilities cause repeated loss of horizontal and/or vertical sync as observed on the system output waveform monitor:

   1. Select DIRECT MODE or BYPASS (no processing) on the offline processing system and notify Houston TV on TV conference.

   2. Monitor the offline processing system for comparison with the online system for best picture.

   3. Notify Houston TV if the offline system video quality is better than the online system video, and prepare to switch the online processing system to direct mode or BYPASS mode if requested by Houston TV.

   4. Time base instabilities may cause intermittent lock indications on the TV system VCRs as well as erratic, invalid, or intermittent indications on the VIDD unit readouts. These time periods should be noted in the equipment log and included on the VCR tape label comments section.

   5. The TV technician will return both processing systems to the normal mode (processing) upon notification from Houston TV that the VTR dump has been terminated.

25.3 Remoting Requirements

25.3.1

Audio accompanying video to JSC/MCC is the DL side of either A-G 1 or A-G 2 (MIL only). Remoting of deinterleaved audio from TV supporting stations to MCC during real-time support or TV dump playbacks is not anticipated during the Space Shuttle mission. The DL interleaved audio will normally be configured to an onboard intercom channel. Deinterleaving of the audio will normally be performed at JSC. Configuration instructions will be voiced to the station(s) by GC or INCO on SITE COORD.

NOTE

Audio level output will be 0 VU from TV system. This level is padded down to a -10 dB level in the station com center for I/F to the satellite link.

25.3.2

The Station TV Tech will ensure that the following requirements are met when the TV system output is interfaced to the satellite TV link:

a. An output signal (a test pattern generator signal, the processing system output signal, or a VTR playback) will be online at all times.

b. The processing amplifier output signal level will not exceed a peak video level of 115 IRE units. The soft clip level control is adjusted for a white clip level of 105 IRE units maximum. The hard clip is adjusted for a chrome level of 115 IRE units maximum. The video frame synchronizer is set internally to clip at 111.1 IRE units.

c. VTR playback levels will be verified on the system output waveform monitor during playback activities. The levels will be adjusted prior to switching the VTR playback on the satellite link by observing the playback signal on the system preview monitor.

d. During contingency operations when the processing system is in direct mode or bypass mode operation (unstable VTR dump from the SSO on the DL), the TV tech will monitor the output signal level to ensure that it does not exceed 115 IRE units peak video. (Adjust the appropriate input VDA gain controls to maintain level if possible. Remote system test video if level cannot be held below 115 IRE units.)

25.3.3

Standard remoting procedures are specified in STDN No. 502.25 and the local Work Instruction.

25.4 Typical Pass Activities

Table 25-1 lists the typical pass activities performed by the STDN Station TV Tech.

25.5 Handover Procedures

25.5.1

The H/O of the satellite TV link will be conducted by Houston TV on TV conference. The earth station and the STDN stations will perform the activities/announcements (TV H/O procedures are contained in Table 1-15).

25.5.2

STDN stations participating in an H/O of the earth station satellite link will ensure that proper video/audio signals remain online at all times during the H/O.

25.5.3

The STDN station handing over to an upcoming station will select full field multiburst for processing through the online TV channel (prime or backup) at final LOS on the STDN station. System test video (SFC bars with Vertical Interval Test Signal [VITS]) will be selected for processing through the online TV channel during periods of momentary LOS prior to final LOS.

25.5.4

The upcoming STDN station will select system test video for processing through the online TV channel. DL video will be remoted at AOS.

Table 25-1. Typical Pass Activities (1 of 2)

Time (Min)	Activity
TV DL minus 70	1. Confirm patching, setup, and prepass check- lists are completed. 2. Confirm VCRs are loaded with video tape for support recording.
TV DL minus 65	1. Record 2 minute segment of system test video signal and 1-kHz audio tone. Check video and audio -1/2 record levels. 2. Play back recording and verify good video and audio quality. 3. DFRC and MIL complete I/F checks with the earth station. Verify that video (multi-burst at 100/40 IRE units) and audio (1-kHz tone at 0 VU (MIL only) are being received at the earth station and the earth station is properly configured to transmit video to JSC/MCC and GSFC/NCC. 4. All stations switch to multiburst with VITS/Vertical Interval Reference Signal (VIRS) and station ID, and prepare for I/F with GSFC/Com Mgr.
TV DL minus 30	1. DFRC and MIL conduct voice checks with GSFC Com Mgr and commence I/F checks of video/audio links. 2. Verify conferenced A-G 1 and A-G 2 are configured to VCR audio tracks.
TV DL minus 28	Commence H minus I/F with NCC TV.
TV DL minus 27	1. MIL TV tech monitors A-G keying and modulation checks on A-G 1 and A-G 2 circuits. (Sequence 5 of STDN H minus I/F count.) 2. TV tech verifies input levels to TV system and to VCR audio channels for A-G 1 and A-G 2.
TV DL minus 20	Commence H minus I/F with Houston TV. Interface with NCC TV complete.
TV DL minus 2	Announce AOS minus 2 minutes to Houston TV on TV conference.
TV DL minus 1	Start VCRs and stand by to remote DL video and audio (MIL only) to JSC/MCC.

Table 25-1. Typical Pass Activities (2 of 2)

Time (min)	Activity
TV DL acquisition	1. Announce "AOS TV" to Houston TV and OPSR. 2. Remote DL video and audio to JSC/MCC. 3. Verify TV signal level is 100/40 IRE units at input to processing system. 4. Perform video/audio quality assessment, and announce quality to Houston TV.
TV DL plus 1	1. Verify backup system quality. 2. Report anomalies or abnormal indications to Houston TV.
VTR dump AOS	1. Announce "VTR dump in progress" to Houston TV and OPSR. 2. Monitor time base instabilities on system output waveform monitor.
VTR dump LOS	1. Announce "VTR dump terminated" to Houston TV and OPSR. 2. Switch processing system to normal mode if operating in direct mode or bypass mode for VTR dump support.
TV DL LOS minus 2	1. Announce "TV LOS minus 2 minutes" to Houston TV. 2. Announce video/audio quality assessment to Houston TV.
TV DL LOS	1. Announce "TV LOS" to Houston TV and OPSR. 2. Remote full field multiburst with VITS/VIRS and station ID plus 1-kHz audio tone (MIL only) to JSC/MCC. 3. Rewind VCRs and spot check recorded video and audio quality. 4. Prepare input for video activity message and submit to OPSR. 5. Complete entries in equipment logs and on tape labels, as required. 6. Configure for playback support, if required, and stand by for playback operations.

25.6 MIL TV Configuration

25.6.1

MIL will utilize the following configuration for Space Shuttle Mission TV support.

a. Run the video and audio synchronizers in the operate modes at all times unless otherwise directed by Houston/TV or NCC/TV. These units will be the primary processing system unless otherwise directed by Houston/TV or NCC/TV. All video tape recordings will be the outputs of the video and audio synchronizers.

b. Run the GVC 3240 processing amplifier in the normal mode at all times unless otherwise directed by Houston/TV or NCC/TV. These units are to be used as backup processing systems only.

25.6.2

The following is a listing of the operational controls and jumpers with their specified settings. They are accessible behind the front panels and on-the-board specified.

a. 110-S Video Synchronizer

Unit Function	Indication/Setting
Operation/Bypass switch	Operate
TBC Mode switch	Auto
Comb-Adapt-Notch switch	Adapt

b. 110-RC Remote Control

Unit function	Indication/Setting
Bypass Switch	Normal
Proc Amp Controls	Normally on presets (pushbutton controls depressed) NOTE Gain control is not active.
Preset Potentiometers	Adjusted as necessary for unity passage.
Freeze Control	Normal
1F/2F/4F	1F
TBC Mode	On
Forced/Auto	Auto
Auto Freeze	Off
Sync and Burst Insert	On
Decoder	Off

c. 118-AS Audio Synchronizer

Unit/Function	Indication/Setting
Operate/Bypass switch	Operate
Enable/Disable Auto Delay	Enable

d. 118-RC Remote Control

Unit/Function	Indication/Setting
Power	On
Bypass switch	Normal
Display Channel switch	Channel 1
Fields/Msec.	Selected as necessary
Manual/Auto/Total	for monitoring uses.
Manual Delay Controls	Not used unless directed by Houston TV or NCC/TV.

e. 110-S Video Synchronizer

1. ADC Board (A1)

Jumper	Function	Setting
J409	Input Gain	Pins 2-4
J644	Color/Monochrome SW Threshold	Pins 2-3
J984	Video Noise Clip	Pins 2-3

2. Write Logic Board (A2)

Jumper	Function	Setting
J240	Auxiliary Vertical Detection Enable	Pins 2-3
J230	VTR Input	Pins 2-3
J560	Noise Clip	Pins 1-2
J480	White Clip	Pins 1-2
J570	Soft/Hard Clip	Pins 2-3
J680	Noisy VTR	Pins 2-3
J620	Auto Freeze Noise Level	Pins 1-2
J785	Auto Black/Hold Freeze	Pins 1-2
J650	Time to Auto Black	Pins 1-2
J665	Auto Freeze w/o Enable	Pins 1-2
J550	Freeze Recovery Time	Pins 1-2
J775	Memory Test	Pins 1-2
J685	Shuttle Disable	Pins 2-3

3. Four Field Memory board (A3-2). No operational jumpers on this board.

4. Controller board (A4)

Jumper	Function	Setting
J437	Force Burst Insertion	Pins 2-3
J899	Proc Amp Vert. Blanking Width	Pins 2-3
J933	Horizontal Blanking Width	Pins 2-4
J999	Vertical Interval Delete	Pins 2-3
	Vertical Phase Switch	Dip SW. S603
	S603-1	1-Open
	S603-2	0-Closed
	S603-3	0-Closed
	S603-4	0-Closed

5. Adaptive Decoder Board (A5). No operational jumpers on this board.

6. Digital-to-Analog Converter (DAC) Board (A6)

Jumper	Function	Setting
J320	Residual Subcarrier Reject	Pins 1-2
J500	Bypass with Reference Loss	Pins 2-3
J550	Proc Amp Gain Time	Pins 1-2
J551	(Same as above: move both jumpers together)	
J150	Proc Amp Output Gain	Pins 1-2
J240	Proc Amp Setup	Pins 3-4
J350	Proc Amp Chroma Gain	Pins 3-4
J451	Proc Amp Hue Control	Pins 3-4

f. 118-AS Audio Synchronizer

1. Analog Board (A1)

Jumper	Function	Setting
J214	Input Gain	Pins 1-2
J284	Input Attenuator	Pins 1-2
J285	(Same as above; move both jumpers together)	
J384	Input Coupling	Pins 1-2
J662	Output Gain	Pins 2-3

2. Digital Board (A2)

Jumper	Function	Setting
J685	Maximum Delay	Pins 2-3
J785	(Same as above: move both jumpers together)	
J899	110-S Delay Port Selection	Pins 1-2
J975	Remote Control Baud Rate	
	Dip SW-S224	Position 24
S224-1	Step/Control Manual Delay	Open
S224-2	Manual Delay Increment	Open
S224-3	Simultaneous Delay Change	Closed
S224-4	Time Code Channel	Open
S224-5	Ground Closure Remote Enable	Open

3. Input/Output Board

Jumper	Function	Setting
J730	Input Impedance Ch. No. 1	Pins 2-3
J830	Input Impedance Ch. No. 2	Pins 2-3
J930	Input Impedance Ch. No. 3	Pins 2-3

25.7 Pilot's Point of View Television

25.7.1
MIL and DFRC receive, process, and record real-time TV transmissions from the Space Shuttle Columbia during landing and landing minus 1 day support as scheduled. Typical pass activities will be in accordance with Table 25-1.

25.7.2
MIL or DFRC will support Pilot's Point of View (PPOV) TV on the 2250-MHz FM link during landing on the east or west coast as scheduled. MIL and DFRC will also support PPOV TV during landing minus 1 day checks (prime and backup passes will normally be scheduled).

25.7.3
Goddard Ops will contact the stations on site coord and verify stations are configured for support of the scheduled TV passes. Goddard Ops will also verify that DFRC has access to TV Conference (SCAMA 110) for support. TV interface and support will be coordinated by Houston TV and NCC TV per normal procedures as specified in Table 1-12.

25.7.4
MIL will configure to remote TV to CDSC for routing to the KSC Press Site via land-line in normal mission configuration for Orbiter TV support.

25.7.5
DFRC will configure the 7-meter system to support TV. The 7-meter will be slaved to the C-band radar at DFRC to provide pointing information. DFRC will remote TV via a station established interface to GE-2 transponder 9 as scheduled during support.

25.7.6
DFRC will be scheduled to support PPOV TV during the landing minus 1 day passes. DFRC TV will be via GE-2 transponder 9 as scheduled.

25.7.7
The following scenario will be implemented for the landing minus 1 day passes which will include PPOV TV support:

a. Selected passes will be scheduled by JSC for MIL and DFRC support.

b. MIL and DFRC will remote TV to JSC in real time as scheduled.

NOTE

DFRC TV will be evaluated for subjective picture quality only. Elevation and slant range may affect TV link signal margins during on-orbit support.

c. DFRC TV (if remoted) will be available at GSFC for NCC TV monitoring.

25.7.8

Landing day PPOV TV support will be provided as follows:

a. For east coast landings, MIL will receive, record, and remote PPOV TV to CDSC for routing to the KSC Press Site via hard-line.

b. For a west coast landing, DFRC will receive and record PPOV TV. The PPOV TV will be provided for remoting in time as scheduled. No audio remoting via the TV link audio channel is required.

25.7.9

General requirements are as follows:

a. Stations will record all PPOV TV and hold on station until released by GSFC.

b. MIL and DFRC support will be in accordance with paragraph 1.3.7 of this NOSP.

c. DFRC configuration will be in accordance with on station procedures for TV support which will follow the general guidelines in paragraphs 25.1 through 25.5 of this NOSP with the following exceptions:

   1. Vertical Interval Data Detector (VIDD) Test Video is not available from DFRC. During TV, H-30 Interface (Table 1-17, sequence 2) will process a multiburst signal for interface checks.

   2. RF turnaround test capability is not available at DFRC and will not be performed during sequence 2 of Table 1-17.

   3. DFRC will process full field color bars during sequences 4 through 7 of Table 1-17.

Section 26. Testing and Simulations

26.1 General

Network testing and simulations for Space Shuttle support are required to demonstrate operational readiness for mission support. Network test programs are the responsibility of the Network Integration Analysis (NIA) Section, Code 450.3, and all questions related to testing should be directed to this code. The Network Simulations Section, Code 453, is involved in all network simulation activities requiring the Portable Spacecraft Simulator (PSS). Tests and simulations are conducted by the NOM, SOC/Simulations Director (SIMDIR), GCEB/NIA, and the onsite simulation teams (PSS SIMDIR), assisted by the NOM and other supporting elements at GSFC as required. This section of the NOSP represents the preliminary planning for EC checkout, tests, data flows, and simulations. This section will not be updated by DCN to remain current with respect to changes in scheduling times and dates. The Network Operations Forecast, general schedule messages, and briefing message will provide the necessary support details.

26.2 Mission Readiness Test

26.2.1

The Mission Readiness Tests (MRT) period begins with the issuance of ISI No. 001 for the Space Shuttle premission period.

26.2.2

The MRT will verify mission support capabilities of all elements before a commitment to support the Space Shuttle mission activity.

26.2.3

The MRT is designed to test station-to-spacecraft, station-to-NCC, and station-to-JSC/MCC I/Fs. The major support functions to be verified are CMD, TLM, A-G voice, metric data, and communications.

26.3 Prelaunch Simulations

26.3.1 Network Simulations

Approximately 3 weeks prior to launch, a network simulation is conducted, if required. Each GN station supports one or two simulated passes, during which mission-unique configurations and procedures are exercised. This simulation also serves to satisfy JSC station validation test requirements. The simulation is scheduled through normal channels.

26.3.2 GSFC Simulations

GSFC will conduct simulations to exercise STDN mission configurations and procedures. NCC and/or SOC personnel emulate JSC console positions, callsigns, and voice procedures. Payload unique support is also simulated when applicable. Stations are scheduled individually through normal channels.

26.4 Timeline for MRT for Space Shuttle

26.4.1 General

The following guidelines are used to conduct the MRT:

a. Stations receive ISI placing them on premission status.

b. The activities to be performed during the MRT are placed on the Network Schedule.

c. Stations receive briefing messages for all scheduled activities where they are required.

d. All hardware and software to be used during Space Shuttle mission support will be tested and checked through data flow tests and GSFC verification tests prior to committing them to mission support.

26.4.2 Events

The following events are included in the MRT testing schedule for Space Shuttle:

a. Network verification testing will be scheduled through normal channels.

b. JSC validation testing will be scheduled through normal channels.

Section 35. Documentation Briefing Report

The documentation information required on station for mission support will be supplied via ISI 001.

Abbreviations and Acronyms

ACC	antenna control console
ACFT	Aircraft Flight Team
ADS	Acquisition Data System
AELS	augmented emergency landing site
AFC	automatic frequency control
AFFTC	Air Force Flight Test Center
AFSC	Airfield Support Coordinator
AFSCN	Air Force Satellite Control Network, Sunnyvale, CA
A-G	air-to-ground
AGC	automatic gain control
AGVE	A-G voice equipment
ALS	augmented landing site
AMDS	automatic message distribution system
AMS	Administrative Message System
AN	alphanumeric
ANGB	Air National Guard Base
ANTQ	Antigua Island, U.K., DOD station radar
AOA	abort once around
AOS	acquisition of signal
APER	analog parameter and event recorder
ARC	ambiguity resolving code
ARMOR	asynchronous real-time multiplexer and output reconstructor
ASC	Ascension Island, U.K., USAF ER station 12
ASCII	American Standard Code for Information Interchange
ASL	anti-sideband lock
ASN	access stack node
ASPC	Attached Shuttle Payload Center
ATO	abort to orbit

AT&T	American Telephone and Telegraph Company
ATDS	Automated Teletype Distribution System
AVD	alternate voice/data
BAL	Bermuda Abort Landing
BCH	Bose-Chaudhuri-Hocquenghem
BCN	backbone concentrator node
BDA	Bermuda, Island, U.K., STDN station
BDF	blocked data format
BDP	block discrimination parameters
BED	block error detector
BER	bit error rate
BERT	bit error rate test
BHB	Boeing Huntington Beach
BLN	backbone link node
BPSK	bi-phase shift keyed
BRMR	briefing message (AMS indicator)
BSS	best source select
B/U	backup
BVLDS	buffered very large store
BW	bandwidth
CAA	civil aviation authority
CAPCOM	Capsule Communicator
CAS	Customer Ancillary System
CCAFS	Cape Canaveral Air Force Station, FL
CCIT	International Telecommunications Consultative Committee
CCL	control conference loop
CCM	computer-controlled multiplexer
CCSDS	Consultative Committee for Space Data Systems
CCTV	closed-circuit television
CCX	communications condition subsystem
CD	conversion device

CDF	communications data formatter
CDM	conversion device management
CDR	commander
CDSC	central data switching center
CIF	Central Instrumentation Facility, Merritt Island, KSC, FL
CLS	contingency landing site
CMAFS	Cheyenne Mountain Air Force Station
CMD	command; JSC Houston Real-time CMD/TDRSS Controller
CMT	Cape Canaveral MPS-39
CNV	Cape Canaveral FPS-16
COTS	commercial off-the-shelf
Com Mgr	Communication Manager
CP	communication processor
CPU	central processing unit
CPX	communications processor subsystem
CRT	cathode ray tube
CSL	circuit-switched line
CSOC	Consolidated Space Operations Contract
CSS	command switching system
CT	com tech
CTC	com tech console
CTE	communications test equipment
CTS	Colorado Tracking Station
DAC	digital-to-analog converter
DARTS	dump and reload the system (program)
DC	destination code
DCC	Dryden Communications Control
DCE	data communications equipment
DCN	documentation change notice
DCS	data communication switch
DCX	data conditioning subsystem

DDD	digital data display
DDIF	digital data interface
DDMS	DOD Manager's Space Shuttle Support Office
DDQ	main engine data dump monitoring report (AMS indicator)
DFD	data format document
DFE	Data Flow Engineer
DFRC	Dryden Flight Research Center
DGS	Diego Garcia Station
DHSS	Data Handling Subsystem
DICE	AFSCN Mission Controller
DIU	digital interface unit
DL	downlink
DLMS	Data Link Monitoring System
DLSR	data link summary report
DMCS	Digital Maintenance and Control Subsystem
DMNE	digital message network element
DMS	Delta Modulation System
DOD	Department of Defense
DomSat	Domestic Satellite
DQM	data quality monitor
DRI	destination routing indicator
DRS	Digital Recording Subsystem
DRSD	distributed range safety display
DSA	data shipment advisory message (AMS indicator)
DSID	data stream identification
DSIS	Defense Communications System/ Satellite Control Facility Interface System
DSN	Deep Space Network
DSS	Deep Space Station Data Systems Supervisor
DSSC	Data Sync Setup Controller
DTG	date time group

DTM	Dryden telemetry
DX	duplex
EAFB	Edwards Air Force Base, CA
EC	engineering change
ECAL	east coast abort landing
ECC	Emergency Communications Center
EDB	end of data block
EFG	earth fixed geocentric
EIU	engine interface unit
ELS	emergency landing site
E&M	ear and mouth
EMCC	Emergency Mission Control Center
EMD	equipment maintenance directive
EOM	end of message; end of mission
EOS	end of segment
ER	Eastern Range, FL
ESR	equipment status report (AMS indicator)
ET	external tank
ETA	estimated time of acquisition
ETRO	estimated time of return to operation
EVA	extravehicular activity
EVCF	emergency voice command fill
FCC	Flight Control Command Federal Communications Commission
FCO	Flight Control Officer
FD	frequency diversity Flight Director
FDDI	first distributed data interface
FDF	Flight Dynamics Facility
FDM	frequency data multiplexer
FDO	Flight Dynamics Officer
FDSB	Flight Dynamics Support Branch

FDX	full duplex (teletype)
FIMS	Fault Isolation and Monitoring System
FLT	flight
FM	frequency modulation
FM DL	frequency modulated downlink
FMT	format
FOV-1	Flight Operations Version 1
FSM	Facility System Manager
GC	Ground Control
GCEN	NCC Communications Center
GDSD	Ground Data Systems Division, JSC
GET	ground elasped time
GMT	Greenwich mean time
GN	Ground Network
GPC	general purpose computer
GSFC	Goddard Space Flight Center, Greenbelt, MD
GSTDN	Ground Spaceflight Tracking and Data Network
GTS	Guam Tracking Station
HBR	high bit rate
HDQ	high-speed data queue
HDR	high data rate
HDX	half-duplex
H/L	hardline
H/O	handover
HOL	Holloman, AFB
HOSC	Huntsville Operations Support Center
HPA	high power amplifier
HQ	Headquarters
HS	high speed
HSD	high-speed data
HSDL	high-speed data line

HSR	high sample rate
HST	Hubble Space Telescope
HTS	Hawaii Tracking Station
IBMTR	intermediate band magnetic tape recorder
ICV	intercenter vector
ID	identification code
I/F	interface
IGMP	internet group management protocol
IIP	instantaneous impact point
IIRV	improved interrange vector
INCO	Instrumentation Communications Officer
INH	inhibit
INP	internet predict
I/O	input/output
IONET	internet protocol operational network
IOS	Indian Ocean Station, Seychelles
IP	intercept point internet protocol
IPCC	interprocessor communications channel
IRIG	Interrange Instrumentation Group
IRV	interrange vector
ISI	interim support instruction
IUS	inertial (or interim) upper stage
JCS	Joint Chiefs of Staff
JDI	Jonathan Dickinson Institute
JPL	Jet Propulsion Laboratory, Pasadena, CA
JSC	Johnson Space Center, Houston, TX
KIDS	Kennedy Integrated Data System
KMR	Kwajalein Missile Range
KMTS	KSC/MSFC Transmission System
KPT	Kaena Point, DOD radar station
KSC	Kennedy Space Center, FL

L&L	launch and landing
LAN	Local Area Network
LBR	low bit rate
LC	link console
LCC	Launch Control Center
LCS	STS launch count status
LDES	Launch Data Evaluation System
LDR	low data rate
LLTDS	Launch and Landing Trajectory Data System
LOP	local operating procedures
LOS	loss of signal
LOT	liftoff time
LPS	launch processing system
LRCC	Lead Range Control Center (ER)
LRCO	Lead Range Control Officer
LRD	Landing Recovery Director
LSB	least significant bit
LSD	low-speed data
LSR	launch support request low sample rate
LTAS	Launch Trajectory Acquisition System
MBI	management information base
MC	Mission Controller (AFSCN)
MCC	Mission Control Center (JSC)
MCM	Mission Communications Manager
MCS	Mission Control Supervisor (WR) monitor and control subsystem
MDAC	McDonnell-Douglas Astronautics Company
MDD	mating-demating device
MDDF	minimum delay data format
MDF	Metric Data Facility
MDM	multiplexer/demultiplexer

ME	main engine
MECO	main engine cutoff
MEDS	modular environment for data systems
MET	mission elapsed time
MFR	multifunction receiver
MIA	modulation interface assembly
MIB	management information base
MIDDS	Meteorological Interactive Data Display System
MIL	Merritt Island, FL, STDN station
MLA	Merritt Island, FL, ER radar station
MODEM	modulator/demodulator
MOIR	Mission Operations Integration Room
MOIS	mission operations instrumentation specialist
MOSPF	multicast open shortest path first
MPS	Main Propulsion System
MRT	mission readiness test
MRTFB	Major Range and Test Facilities Base
MSB	most significant bit
MSFC	Marshall Space Flight Center, Huntsville, AL
MSFTP	manned space flight telemetry processor
MSL	message-switched line
MSM	mode select matrix Mission Support Manager
MSP	mission support procedure
MSPC	multiple store program command
MSS	message switching system
MTL	Mt. Lemon, AZ
MTPT	modified throughput
MTR	magnetic tape recorder
MTU	magnetic tape unit master timing unit
MUX	multiplexer

NASA	National Aeronautics and Space Administration
NASCOP	NASA Communications Operating Procedure
NAWC	Naval Air Warfare Center
NBD	NISN blocker/deblocker
NC	Network Controller
NCC	Network Control Center
NCPS	Network Command Processing System
ND	Network Director
NDSOL	NASA Director of Station Locations
NEST	Network Engineering Support Team
NHS	New Hampshire Station
NIA	Network Integration Analysis
NIB	NISN interface board
NISN	NASA Integrated Services Network
NLIC	NISN LAN interface card
NLT	no later than
NMCC	National Military Command Center
nmi	nautical mile
NMS	Network Management System
NNSG	NISN Network Scheduling Group
NOAA	National Oceanic and Atmospheric Administration
NOC	Network Operations Center
NOM	Network Operations Manager
NOMI	network output multiplexer input
NON-INH	non-inhibit
NORAD	North American Air Defense Command
NOSP	Network Operations Support Plan
NRT	network readiness test
NRZ	nonreturn-to-zero
NRZ-L	nonreturn-to-zero-level
NSP	network signal processor

NST	Network Support Team
NSTS	National Space Transportation System
NTD	NASA Test Director
NTM	Network Test Manager
NTO	Network Test Organization
OAFB	Onizuka Air Force Base
OAFS	Onizuka Air Force Station
OCC	Operations Control Center (WR)
OCR	Operations Control Room (GSFC)
OD	operational downlink AFSCN Operations Director orbit determination
OD DL	operational data downlink
ODM	operations data message
OFT	orbital flight test
OI	operational instrumentation
OIS	operational intercommunications system
OMI	operations and maintenance instruction
OMNI	Space Shuttle Orbiter omnidirectional antenna
OMS	Orbital Maneuvering System
OPF	Orbiter Processing Facility
OPMAN	operator interface
OPN	operations message
OPSR	Operations Supervisor
OPS	operations (Ops)
OSTS	Office of Space Transportation Systems
OV	Orbiter vehicle
PA	power amplifier
PAFB	Patrick Air Force Base
PAO	Public Affairs Office
PB	playback
PBI	pushbutton indicator

PBN	principle block number
PCA	point of closest approach
PCM	pulse code modulation
PDF	programmable data formatter
PDL	Ponce de Leon, New Smyrna, FL, STDN station
PDM	performance data message
PED	polynomial error detector
PEP	polynomial error protection
PET	performance evaluation test
PL	payload
PLT	pilot
PLUM	parameters list update message
PM DL	phase modulated downlink
PMI	programmable modem interface
PMR	Pacific Missile Range
PMS	Portable Maintenance Subsystem
PM UL	phase modulated uplink
POA	point of acquisition
POCC	Payload Operations Control Center
PP	present position patchpanel
PPOV	Pilot's point of view
PPS	Programmable Patch System packets per second
PRD	program requirements document
PROM	programmable read-only memory
PRT	problem report message (AMS indicator)
PSK	phase shift key
PSS	portable spacecraft simulator postmission reporting message (TTY indicator)
PTP	programmable telemetry processors
PTT	Point Pillar, WR station

Q	radar suffix
QM	quality monitor
RAP	restricted access processor
RCA	GE Americom
RCC	Range Command Controller (ER) Range Control Center (ER) Rescue Coordination Center
RCI	remote control interface
RCO	Range Control Officer (ER)
RE	ranging equipment
RER	receiver-exciter-ranging
REV	revolution
RF	radio frequency
RFI	radio frequency interference
RHC	right-hand circular
RI	Rockwell International
RIC	request for information or clarification
RIMS	Rockwell Integrated Management System
RMCP	receiver/monitor control panel
RNG	range
ROCC	Range Operations Control Center (ER)
ROCS	real-time operational computer data system
RPS	record and playback subsystem
RSC	range safety command
RSDP	remote site data processor
RSO	Range Safety Officer
RSS	receiver switching system
R/T	real time
RTC	real-time controller real-time command
RTCS	real-time computer system
RTDS	Real-time Data System

RTLS	return to launch site
RTP	range tone processor real-time transport protocol
RTS	AFSCN remote tracking station
SA	single access
SBE	S-band exciter
S/C	spacecraft
SCA	Shuttle carrier aircraft
SCAMA	switching, conferencing, and monitoring arrangement
SCAN	software catalog for the network
SCD	small conversion devices
SCE	spacecraft command encoder
SCM	Shift Communications Manager
SCP	Space Shuttle Contingency Plan (AMS indicator)
SCR	stripchart recorder
SCVM	Shuttle command and voice multiplexer
SDB	start of data block
SDS	SUE Data System
SDT	serial decimal time
SDTC	serial data time code
SEL	System Engineering Laboratory
SFL	Shuttle forward link
SGLS	Space-to-Ground Link System
SIC	spacecraft identification code
SIMDIR	Simulations Director
SITE COORD	station coordination (loop)
SKR	Serial Key Generator Recombiner
SLDPF	Spacelab Data Processing Facility
SLSS	Shuttle Launch Support System
SLT	STS liftoff time (AMS indicator)
SMM	STDN Mission Manager
S/N	signal-to-noise

SN	Space Network
SNI	San Nicolas Island
SNMP	simple network management protocol
SNR	signal-to-noise ratio
SOC	Simulations Operations Center (GSFC) Support Operations Center (DOD)
SOCC	Simulation Operations Control Center
SOPS	Space Operations Squadron
SOS	start of segment
SOSC	STS Operations Support Center
SPA	Shuttle processing area
SPK	Scott Peak, AZ
SRB	solid rocket booster
SRE	STDN ranging equipment
SRLDS	Shuttle Return Link Data System
SRM	schedule request message
SRO	Superintendent of Range Operations
SRT	station readiness test
SRTE	subcarrier range tone equipment
SSC	Space Surveillance Center subsystem controller
SSDU	Shuttle status display unit
SSI	software support instruction
SSIU	SUE system interface unit
SSM	site status message
SSME	Space Shuttle main engine
SSO	Space Shuttle Orbiter
SSR	support request message (AMS indicator)
STADIR	Station Director
STDN	Spaceflight Tracking and Data Network
STPS	S-band Tracking Processor System
STS	Space Shuttle Transportation System

SVA	spacecraft/vehicle anomaly report (AMS indicator)
SX	simplex
SYNC	synchronization
TAER	time, azimuth, elevation, and range
TAL	Transoceanic Abort Landing
TBD	to be determined
TBS	to be supplied
TCDS	Telemetry and Communications Data System
TCDT	terminal countdown demonstration test
TCS	Telemetry and Control Station (Oakhanger)
TCT	time code translator
T&DA	tracking and data acquisition
TDM	time division multiplexer
TDMA	time-division multiplexed access
TDPS	Tracking Data Processing System
TDR	tracking data router
TDRS(S)	Tracking and Data Relay Satellite (System)
TDS	tracking data system
TEL-4	TLM-4, AFETR Station
TLM	telemetry
TM	Technical Manager
TN	TDRSS Network
TOO	AFSCN Test Operations Order
TP	TLM processor
TRACK	Tracking Controller (callsign)
TRACK COORD	Tracking Coordination
TRK	track
TTS	Thule Tracking Station
TV	television
TWTA	traveling wave tube amplifier
UDP	user datagram protocol

UHF	ultra-high frequency
UL	uplink
ULT	uplink test
USAKA	U.S. Army Kwajalein Atoll
USSPACE COM	United States Space Command
UTDF	universal tracking data format
USAEPG	U.S. Army Electronic Proving Ground
V1	voice 1
V2	voice 2
VAB	vehicle assembly building
VAFB	Vandenberg Air Force Base, CA
VAR	video activity report message (AMS indicator)
VCO	voltage-controlled oscillator
VHS	very high speed
VID	vehicle identification
VIDD	vertical interval data detector
VIRS	vertical interval reference signal
VITS	vertical interval test signal
VTR	video tape recorder
VTS	Vandenberg Tracking Station, VAFB, CA (AFSCN)
WAN	wide area network
WB	wideband
WBMTR	wideband magnetic tape recorder
WFEP	Wallops front end processor
WFF	Wallops Flight Facility, VA
WLPS	Wallops Island
WOTS	Wallops Orbital Tracking Station
WOW	weight on wheels
WPS	Wallops S-band Station
WR	Western Range
WSC	White Sands Complex

WSGT	White Sands Ground Terminal
WSMR	White Sands Missile Range
WSO	Wallops Scheduling Office
WSS	White Sands Station
WSSH	White Sands Space Harbor
WTIS	wideband transmission interface system
WSC	White Sands Complex

Distribution List

Organization	Name of Recipient	Copies
30RANS/DOF	KOERTGE, LYNNE P.	1
45 RANS/DS	GAWEL, MICHAEL	1
AFSCN	DUBRIDGE, SCOTT	1
AFSCN	GATEWOOD, CLIFTON	1
AS&T LIB/IDM	GCP/LIBRARY/ZINCHINI	1
AS&T/450.6	SERVICE SUPPORT LIB/ZINCHINI	1
AS&T/CSOCDOCS	TESTOFF, STEVEN	1
CAEL/452.C	BOUCHARD, RICHARD	E
CRC/450.C	HARRIS, HORACE H.	E
CSC/435.2	POWERS, PEPPER	1
CSC/450.R	CAPPELLARI, JAMES	1
CSC/453.2	MITCHELL, WARREN J.	1
CSR/3200/SIMONSON	NETWORKS OPS	1
DFRC	BORCHERS, DONALD	1
DFRC	GRIFFITH, CRAIG	E
DFRC	BORSCHE, JOHN	E
DFRC/XFI	MATHENY, BETSY	1
DFRC/XFR	SMITH, ROBERT R.	1
GSFC/290.2	ALLEN, MIKE	1
GSFC/291	NORMAN, SEATON B.	1
GSFC/291	TOMARDY, BERNARD V.	E
GSFC/450	FLAHERTY, ROGER	E
GSFC/451	BANGERTER, JAMES A.	1
GSFC/451	SOBCHAK, TED	1
GSFC/567.3	CHRISTO, JAMES W.	E
GSFC/FDF	OFFERMAN, HOLLY	E
GTE/NISN	PETERMAN, JOEL	E
HAMRS/450.C	FRANKLIN, THOMAS	E
HCI	SPENCER, JIM	1
HTSI	LOGAN, GREGORY K.	E
HTSI/NCC/GCC	DEAL, DAVID L.	1
HTSI/450.1	CALHOUN, MELVIN K.	1
HTSI/450.1	GRAY, MICHAEL C.	1
HTSI/450.1	HANKINSON, JOHN	E
HTSI/450.1	PIFER, FRED	1
HTSI/450.1	RILEY, KEVIN	1
HTSI/450.1	TOOMER, HOLLICE	1
HTSI/450.A	CURLEY, JOSEPH M.	E

HTSI/450.A	DANIEL, EARL H.	1
HTSI/450.A	SCHNECK, BRUCE	1
HTSI/450.A	WASHINGTON, HOWARD	1
HTSI/450.C	HUNT, REGINALD	E
HTSI/450.C	RICHARDS, EDGAR	E
HTSI/450.C	SHOWELL, AVANAUGH	E
HTSI/450.C	WILLIAMS, ANTHONY	1
HTSI/450.C	ZIEGLER, LARRY W.	E
HTSI/450.H	BRAUN, JAMES A.	E
HTSI/450.H	WILLIS, KEVIN	E
HTSI/450.J	GAMS, FRED	E
HTSI/450.J	ZIMMERMAN, RALPH E.	E
HTSI/450.S	DRY, CHERYL	E
HTSI/NISN	NISN M&O DOCUMENTATION/LOMAX	1
HTSI/NTCG	NTCG DOCUMENTATION	1
HTSI/SHO	PAYNE, JAMES L.	E
JSC	ENRIGHT, MARK E.	E
JSC	MARSH, MICHAEL K.	E
JSC	FOSTER, WILLIAM M.	E
JSC/DF23	SEVERANCE, MARK	E
JSC/DF24	MACFARLANE, F.J.	E
JSC/DO62	PAYLOADS LIBRARY	1
JSC/DV	MARRIOTT, ROBERT	1
JSC/EV4	FOGELMAN, DOUGLAS A.	E
JSC/EV4	ROSS, JOHN A.	1
JSC/J30M	OST LIBRARY	13
JSC/LM	KRASIG, RICHARD	E
JSC/LM12/L1K	CHEN, RONALD	E
JSC/ROCKWELL	TRAJ OPS LIBRARY	1
JSC/RSOC	CAMPBELL, RICHARD P.	E
JSC/TO	AQUINO, JOSEPH	E
KSC	MCLAMB, MONIQUE	E
KSC	THORTON, ROD	1
KSC/LSO-145	HOGAN, MICHAEL	1
KSC/RPS	HART, RENEE	E
LM/450.C	SMITH, JOHN	E
MIL	MIL STADIR	1
MIL	OPS MANAGER	4
MIL	SR MANAGER	1
MSFC	BOCLAIR, NATHANIEL	1
MSFC	EVANS, BILL	1
MSFC	WATSON, LISA	1
MSFC/CN22D	MSFC REPOSITORY	1

MSFC/EO52	WRIGHT, KIMBERLY A.	E
MSFC/NTI	MARSHALL OPS	1
MSFC/UMS	DEMPSEY, GARY	1
MSFC/UMS	KENNEY, KEN	1
MSFC/UMS	WILLIAMS, WALT	1
RATHEON/IP NOC	REESE, NORMAN	E
WFF	HENDRICKSON, J.R.	1
WFF	KRESCH, CHARLES	E
WFF	VIEIRA, GERALD	E
WFF/820	PURDY, CRAIG L.	1
WFF/822.1	RENN, CHARLES A.	E
WFF/833	GRANT, DONALD E.	E
WFF/833.3	SUITER, DAVID P.	1
WFF/833.3	VOSS, FRANK G.	1
WFF/HTSI	MILLARD, THOMAS	E
WSC/GD	GONZALES, BOB	E
WSC/GD	WARNER, ROY	E
WSC/HTSI	MILLER, MIKE	E
WSC/HTSI	SYPHER, STEPHEN	E
WSC/LIB	TAYLOR, GLORIA	7
WSC/NASA	GAVURA, JAMES	E

To coordinate changes to this distribution list, contact the AS&T/GCP/Library via mail c/o AS&T, CSOC Documentation (IDM), Goddard Corporate Park, 7515 Mission Drive, Lanham, Maryland 20706; via phone 301-805-3897; Allen.Martin@CSOCONLINE.COM or TINA.ZINCHINI@CSOCONLINE.COM. This distribution list is current as of 2/24/03.

The distribution list provides a list of individuals who have requested copies or it has been determined that they require notification that the document has been updated. Those recipients that receive hardcopy(s) will have the number of copies indicated. Those receiving an email notification will have an ’E’ rather than a number.

The document has been loaded to the Document and Data Control System (DDCS) online library.

450-601-NOSP/Space Shuttle
(Supersedes 601/Space Shuttle)

Network Operations Support Plan for the Space Shuttle Program

Original