INTERNATIONAL SPACE STATION COMMUNICATIONS & TRACKING (C&T) TDRSS TEST STATUS

Human Spaceflight Network Support Group

Doug Lumsden
Lockheed Martin
GSFC Code 450
February 11-12, 1998

ISS C&T TDRSS TEST STATUS

AGENDA

- C&T SYSTEM COMPONENTS OVERVIEW
- C&T QUALIFICATION MODEL (QM) TEST PLANS
- C&T FLIGHT MODEL (FM) MEIT TEST PLANS

ISS C&T TDRSS TEST STATUS

C&T SYSTEM COMPONENTS OVERVIEW

- » S-BAND
- » Ku-BAND
- » C&T SYSTEM & Z1 TRUSS
- » C&T IT&V PROGRAM OVERVIEW

ISS C&T TDRSS TEST STATUS

C&T SYSTEM COMPONENTS OVERVIEW

S-band Communications :

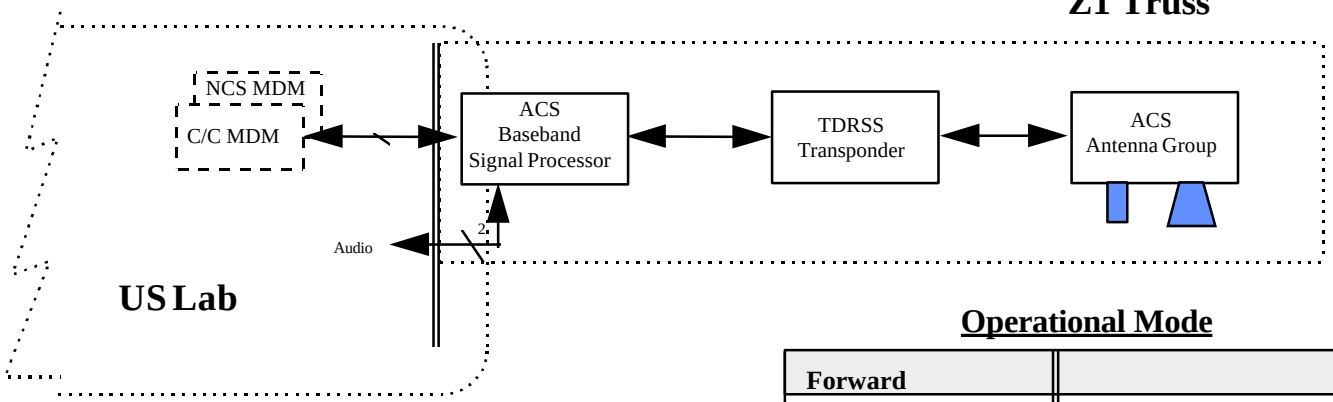

Operational Mode

Forward	
Date Rates:	72/6 Kbps (SSAF)
Data Format:	NRZ-L
Carrier Modulation:	QPSK
Carrier Frequency:	2085.6875 MHz
Polarization:	RHCP
Encoding:	Reed-Solomon
Return	
Date Rates:	192/12 Kbps (SSAR)
Data Format:	NRZ-L
Carrier Modulation:	QPSK
Carrier Frequency:	2265MHz
Polarization:	RHCP
Encoding:	R-S, Convolutional
SN Mode:	DG1, Mode 1 & Mode 2

- **High Data Rate Operations**
  - Up to 192 Kbps Downlink Telemetry Data with Option For Up to two 9.6 Kbps Downlink Voice Channels
  - 72 Kbps Uplink Command and Data with option for up to two 9.6 Kbps Uplink Voice Channels
- **Low Data Rate Operations**
  - 12 Kbps Downlink Telemetry Data
  - 6 Kbps Uplink Commands and Data

ISS C&T TDRSS TEST STATUS

C&T SYSTEM COMPONENTS OVERVIEW - Continued

Ku-Band Communications :

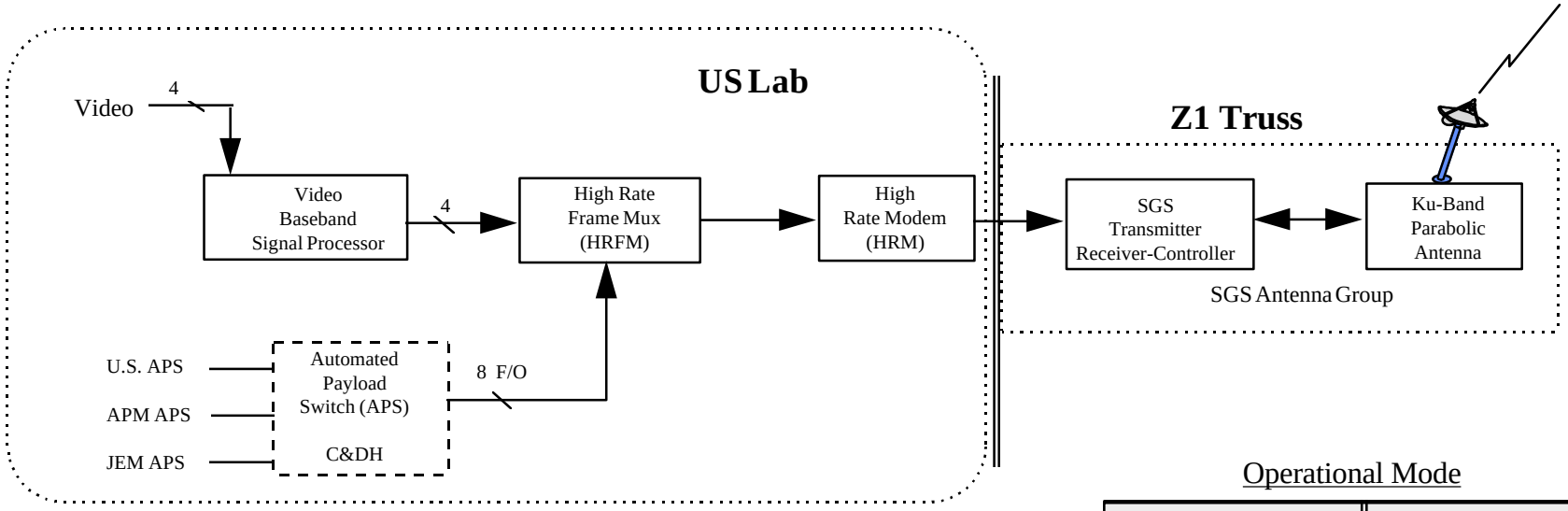

- **Downlink**
  - 50 Mbps - To be Upgraded to 75 and 150 Mbps
    - – 8 Channels of Bitstream or CCSDS Packet Format Data
    - – 4 Channels of Video
    - – Play Back of Prerecorded Payload Data
- **Uplink**
  - 3 Mcps (PN code) - To be Upgraded to 3Mbps
    - – Used for Antenna Auto-Tracking Only

Operational Mode

Return	
Date Rates:	50 Mbps (KSAR)
Data Format:	NRZ-M
Carrier Modulation:	BPSK
Carrier Frequency:	15.0034 GHz
Polarization:	LHCP
Encoding:	R-S, Convolutional
SN Mode:	DG1, Mode 2

ISS C&T TDRSS TEST STATUS

C&T SYSTEM & Z1 TRUSS

HARDWARE	VERIFICATION ROLE
Product Group 1 (Boeing-HuntingBeach) • Ku-band Antenna • Ku-band TRC, VBSP, HRFM, HRM • S-band Antenna • S-band BSP, RFG XPDR	• C&T ORU Qualification • Subsystem Demonstration • Support to System Verification
Product Group 2 (Boeing-Canoga Park) • Ku-band antenna Boom • Cabling	• Z1 Structure, Ku-band Boom, and cabling verification • Integrate the Ku-band and S-band ORUs onto Z1 and P6 Trusses • System Verification Testing and Analysis

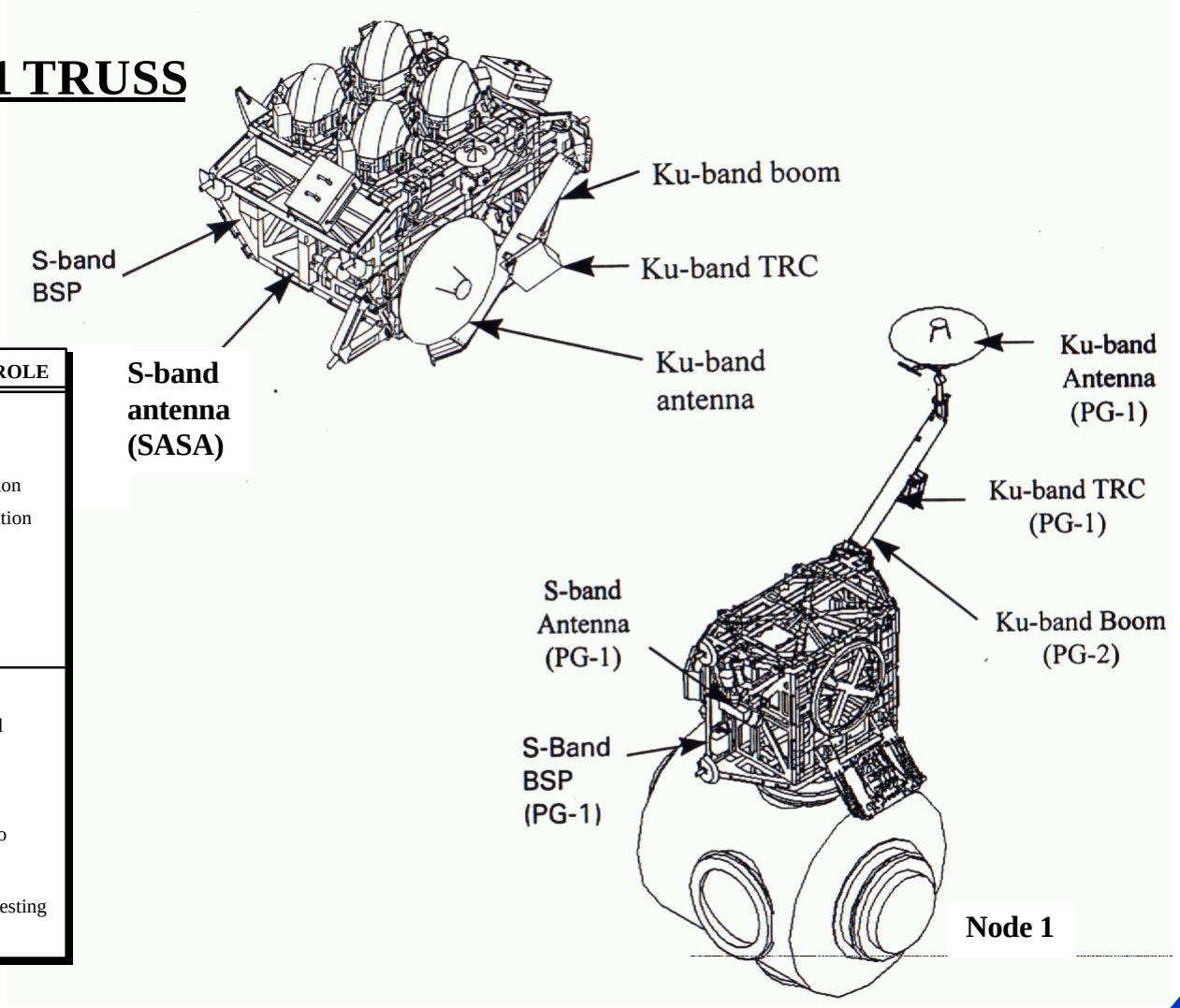

ISS C&T TDRSS TEST STATUS

C&T IT&V PROGRAM OVERVIEW

- The ISS Communications and Tracking (C&T) Program is planning three (3) major verification activities that require TDRSS and NISN support

1) ISS Qualification Model (S-band/Ku-band) / TDRSS Functional Testing - IN PROGRESS
   - Conducted from Boeing/Seattle
   - February - March 1998

2) ISS Qualification Model (S-band/Ku-band) / TDRSS Performance Testing - TBD
   - Conducted from JSC/ESTL
   - Summer 1998

3) ISS Flight Model (S-band/Ku-band) Multi-Element Integration Test (MEIT) - PLANNED
   - Conducted from SSPF/KSC
   - August - November 1998

ESTL = Electronics Systems Test Laboratory (JSC)
SSPF = Space Station Processing Facility (KSC)

ISS C&T TDRSS TEST STATUS

C&T QUALIFICATION MODEL (QM) TEST PLANS

- » C&T QUAL MODEL TEST OVERVIEW
- » TEST CONFIGURATIONS
- » TEST STRUCTURE
- » ISSUES & CONCERNS

ISS C&T TDRSS TEST STATUS

C&T QUAL MODEL TEST OVERVIEW

❑ ISS Qualification Model (S-band/Ku-band) / TDRSS Functional Testing @ Boeing Seattle/Kent

• Functional Tests (March 2 - March 18, 1998)
- ➢ Conducted at Boeing Seattle in Conjunction with Z1 Truss I&T (EMI/EMC Testing)
- ➢ RF characterization of the nominal Space-to-Ground (ie. WSC) functions
- ➢ Verify RF Functional Characteristics (Also Verifies the PG2 contractual requirements)
- ➢ NO Direct Radiation of the ISS Antenna Systems
- ➢ NO Data Fow to the Control Centers (SSCC and POIC)
- ➢ NO Enhanced KSAF (3 Mbps)

• Specific Test Objectives
- ➢ Verify fundamental S/K-band Signal characteristics and TDRSS Compatibility
- ➢ Verify S-band Forward Link Signal Characteristics with TDRSS
- ➢ Verify S-band Return Link Signal Characteristics with TDRSS
- ➢ Verify K-band Return Link Signal Characteristics at 50Mbps with TDRSS
- ➢ Demonstrate S-band Coherent Mode Operations with TDRSS
- ➢ Demonstrate K-band Return Link at Higher Data Rates (75 and 150Mbps)
- ➢ Demonstrate S-band and Ku-band Simultaneous Operations

ISS C&T TDRSS TEST STATUS

C&T QUAL MODEL TEST OVERVIEW - Continued

- Test Slipped From Mid February to March 2 Due to Z1 Truss Cable/Connector Implementation

- GSFC Test Team Worked With Boeing Prime And PG2/Rocketdyne To Finalize Test Plans/ Procedures. Seattle/Kent Test site is being Configured.
  - TDRSS Test Plan Finalized/Signed. Final Procedures in Work
  - Z1 Installed in Boeing Acoustics Chamber
  - ORU Stand-Alone Tests Underway
  - GSFC Video Analysis Equipment Installed in Test Set
  - NISN Test Circuits (Voice/Data) Between WSC ◄——►Seattle/Kent Installed

- GSFC Compatibility Test Van (CTV) Will Provide Initial Space Network Simulation and RF Link to TDRS-West (171 ^{0} W)
  - GSFC Performed Detailed Test Site TDRSS Link Propagation Analysis
  - CTV Arrival Set for February 23

- ACS and SGS Test Sets Used to Support S-Band and Ku-Band Testing
  - ACS and SGS Test Set #1 @ Seattle (Control and Monitor ORUs)
  - SGS Test Set #2/Boeing Personnel @ WSGT (Data Analysis/Scoring) - Arrival after March 1

ISS C&T TDRSS TEST STATUS

TEST CONFIGURATIONS

QUAL MODEL TEST DATA FLOW

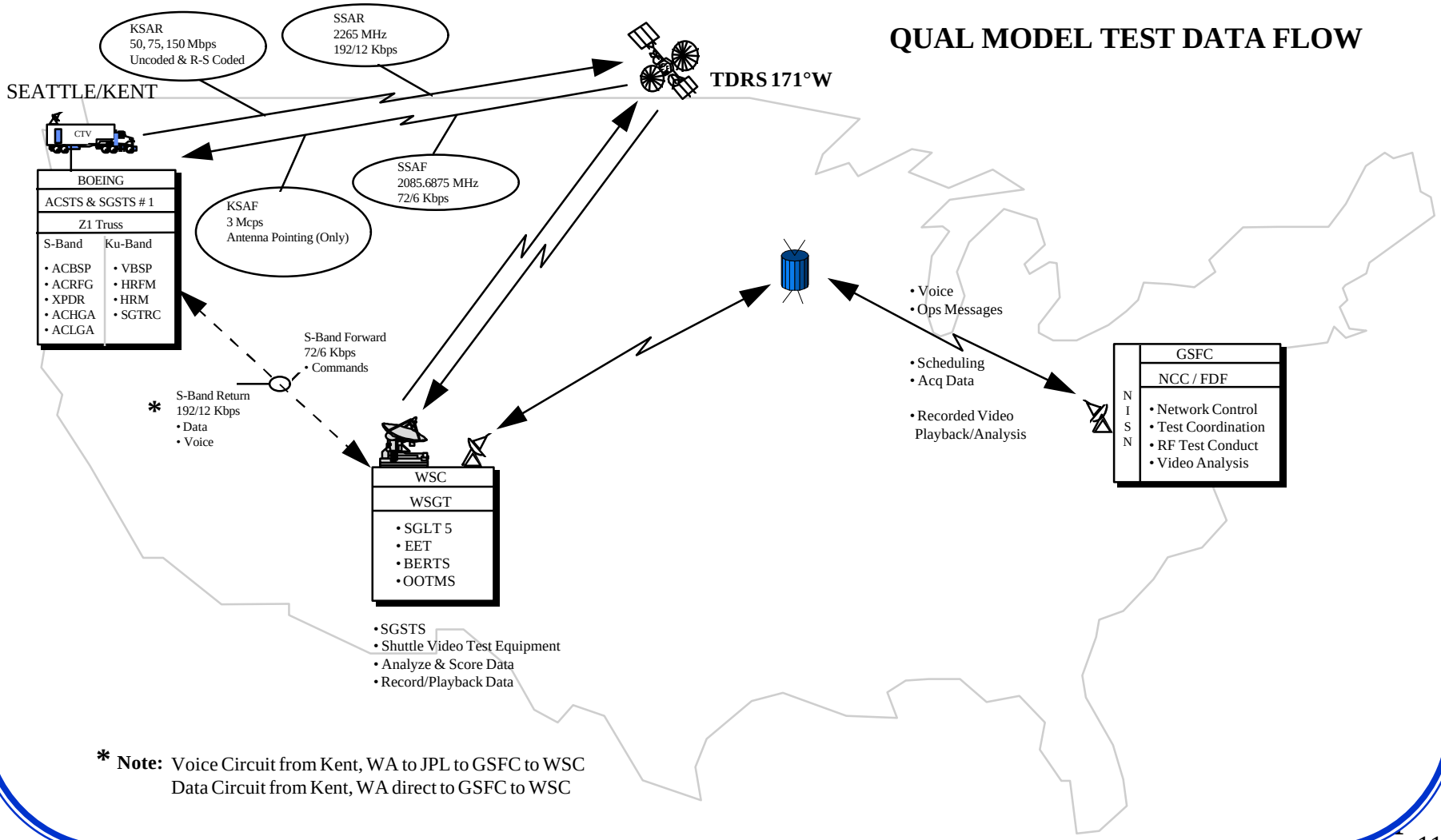

* **Note:** Voice Circuit from Kent, WA to JPL to GSFC to WSC
Data Circuit from Kent, WA direct to GSFC to WSC

ISS C&T TDRSS TEST STATUS

TEST CONFIGURATIONS - Continued

EQUIPMENT CONFIGURATION @ BOEING SEATTLE/KENT, WA FACILITY

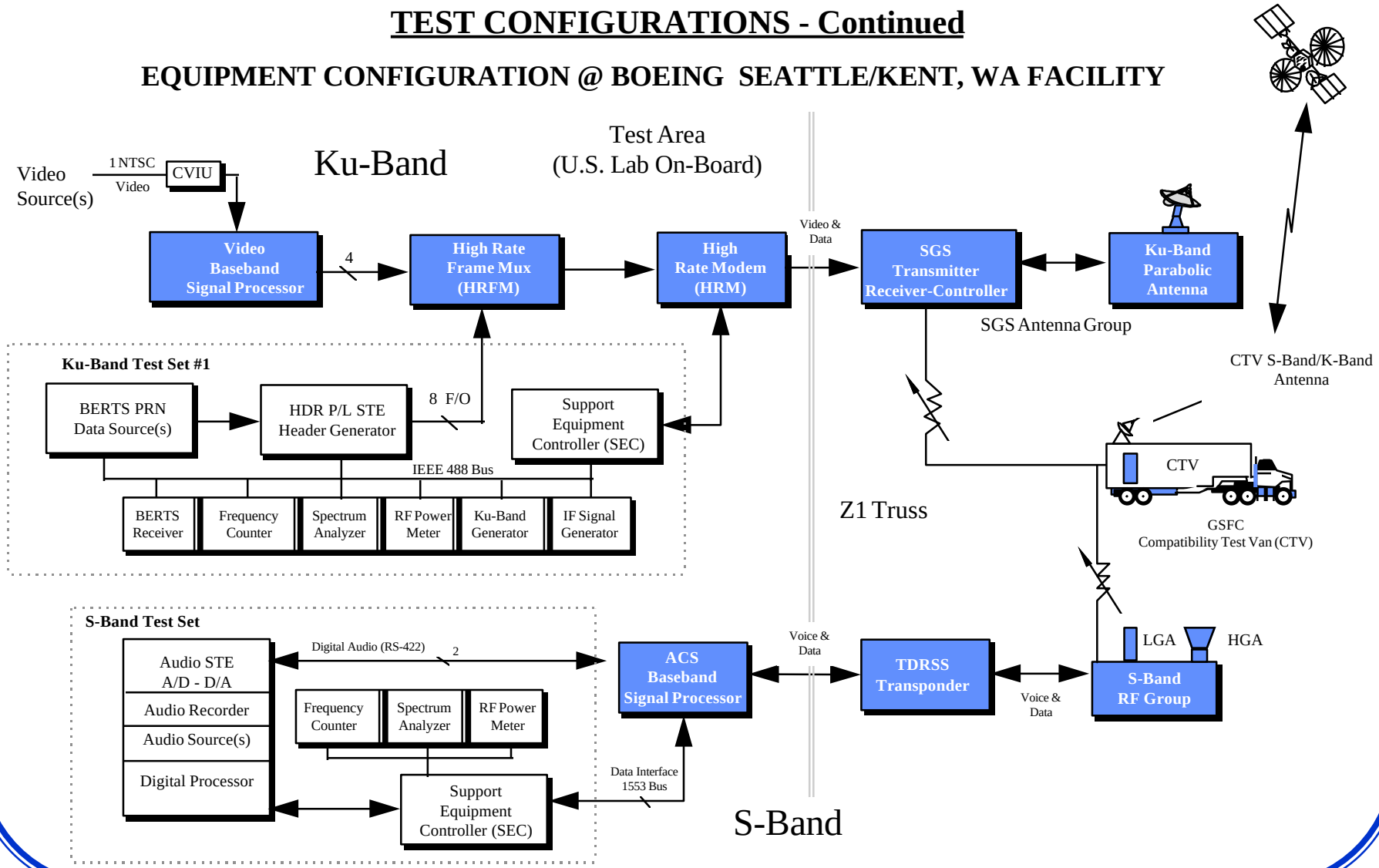

ISS C&T TDRSS TEST STATUS

TEST CONFIGURATIONS - Continued

FACILITY LAYOUT @ BOEING SEATTLE/KENT, WA TEST SITE

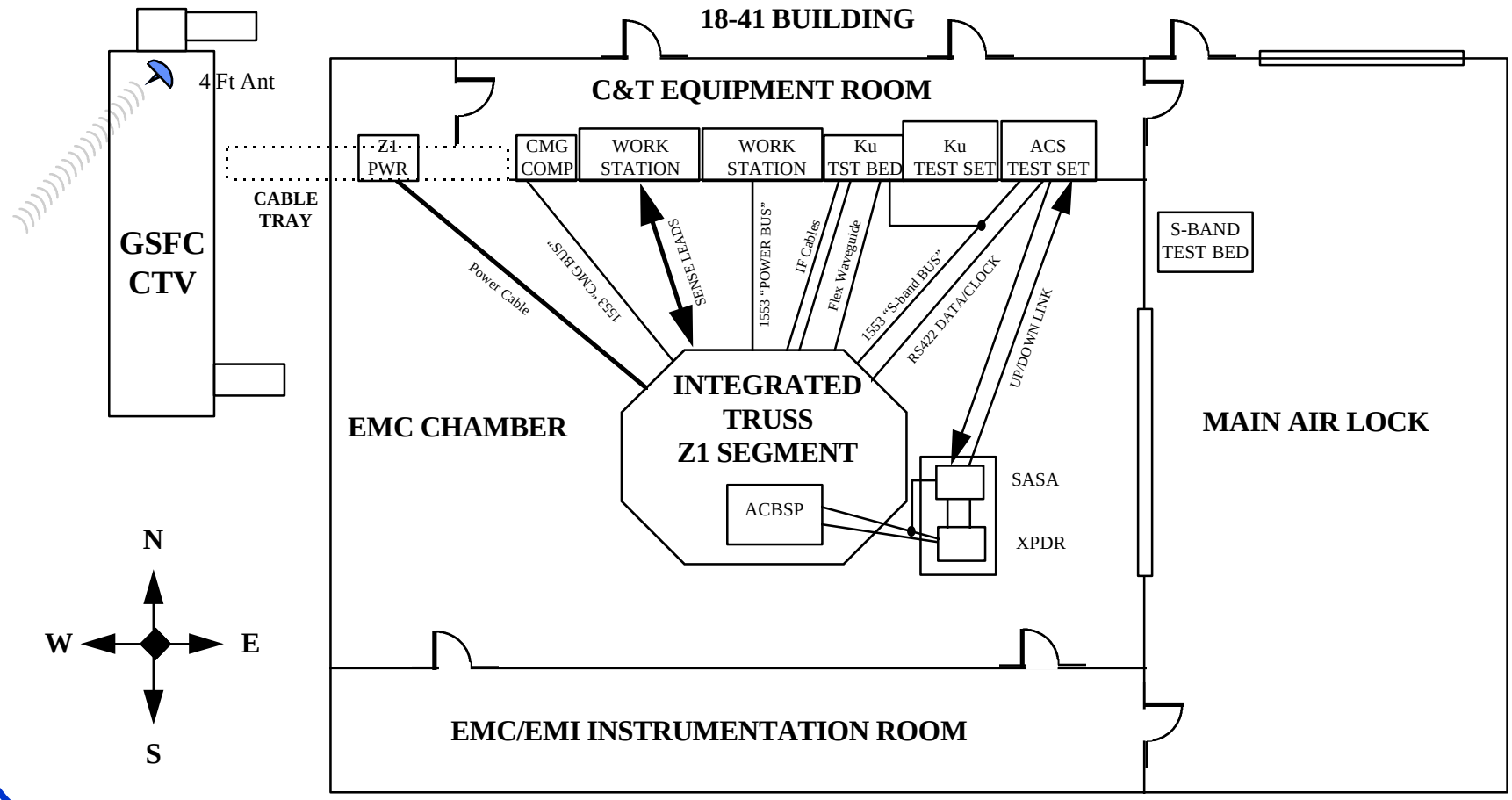

ISS C&T TDRSS TEST STATUS

TEST STRUCTURE

- Three Phased Test Approach

Phase 1 Prerequisite Tests (January 27 - March 12)

- Checkout the Test Sets and S-Band and Ku-Band Qual Units
- Pre-Compatibility Evaluation (Checkout of SN Resources)
- STDN Preliminary RF Engineering Tests (Per GSFC Standard Procedures)

Phase 2 Hard-line Tests (March 5-10)

- Verify Subsystem RF Readiness
- Verify Data Handling
- Evaluate BER (Simulator/CTV)

Phase 3 Radiated Tests (March 5 -9, March 12-16)

- TDRSS RF Compatibility
- Analyze and Record 50, 75, 150 Mbps Data at WSC

ISS C&T TDRSS TEST STATUS

ISSUES & CONCERNS

- Network Issues
  - Test Start Delays
  - Condensed Test Schedule
  - Test Procedure Development Details
  - Civil Servant Travel Funding
  - El Niño

ISS C&T TDRSS TEST STATUS

C&T FLIGHT MODEL (FM) TEST PLANS

» MULTI-ELEMENT INTEGRATION TEST (MEIT) OVERVIEW

» MEIT OBJECTIVE & CONFIGURATIONS

» NETWORK ISSUES

» C&T QUAL & FLIGHT MODEL NETWORK TEST SCHEDULES

ISS C&T TDRSS TEST STATUS

MULTI-ELEMENT INTEGRATION TEST (MEIT) OVERVIEW

- ISS Program Plans to Integrate/Checkout Launch Packages for Cargo Integration Testing in the August - November 1998 Time-Frame
- MEIT for Flight 3A (Launch 1/99), Flight 4A (Launch 3/99), Flight 5A (Launch 5/99), and Flight 6A (Launch 6/99) at KSC Space Station Processing Facility (SSPF)
- Test Objectives:
  - Evaluate S/Ku-Band Flight Model Equipment's Functional Interfaces With Other Subsystems (i.e. NCS and C&C MDM) and TDRSS
  - Validate/Verify System Requirements for End to End Performance of S/Ku-Band On-Orbit Configuration (MDM, Z1 and P6 Integration)
  - Activate ISS Power Via Commands From SSCC Through WSC/TDRS
- Use SSPF Roof Top Antenna to Radiate to/From MILA/TDRS

ISS C&T TDRSS TEST STATUS

MULTI-ELEMENT INTEGRATION TEST (MEIT) OVERVIEW - Continued

- GSFC ISS Test Team Currently Working with ISS Verification Validation Integrated Test Requirements Group (V&V ITRG) to Finalize Detailed Test Objectives (DTOs) and Develop Test Plans/Procedures

- GSFC to Coordinate S-band Hard-line Interface
  - Use Existing NISN Line ("Boeing Software Update Circuit")
  - Provide PTP for Baseband ⟶ NISN/IP Interface
  - Provide TDRSS RF Test Set TURFTS for RF ⟶ Baseband Interface

ISS C&T TDRSS TEST STATUS

MEIT TEST CONFIGURATION

CITE = Cargo Integration Test Equipment is a high fidelity orbiter simulations system (STS cargo bay simulator) that is used to mount the ISS elements to simulate the shuttle launch and deployment environment.

MATE = Multiplexor/Demultiplexor (MDM) Application Test Environment (MATE) provides an environment for debugging, integrating and testing User Application Software executing in an MDM or Flight Equivalent Unit (FEU).

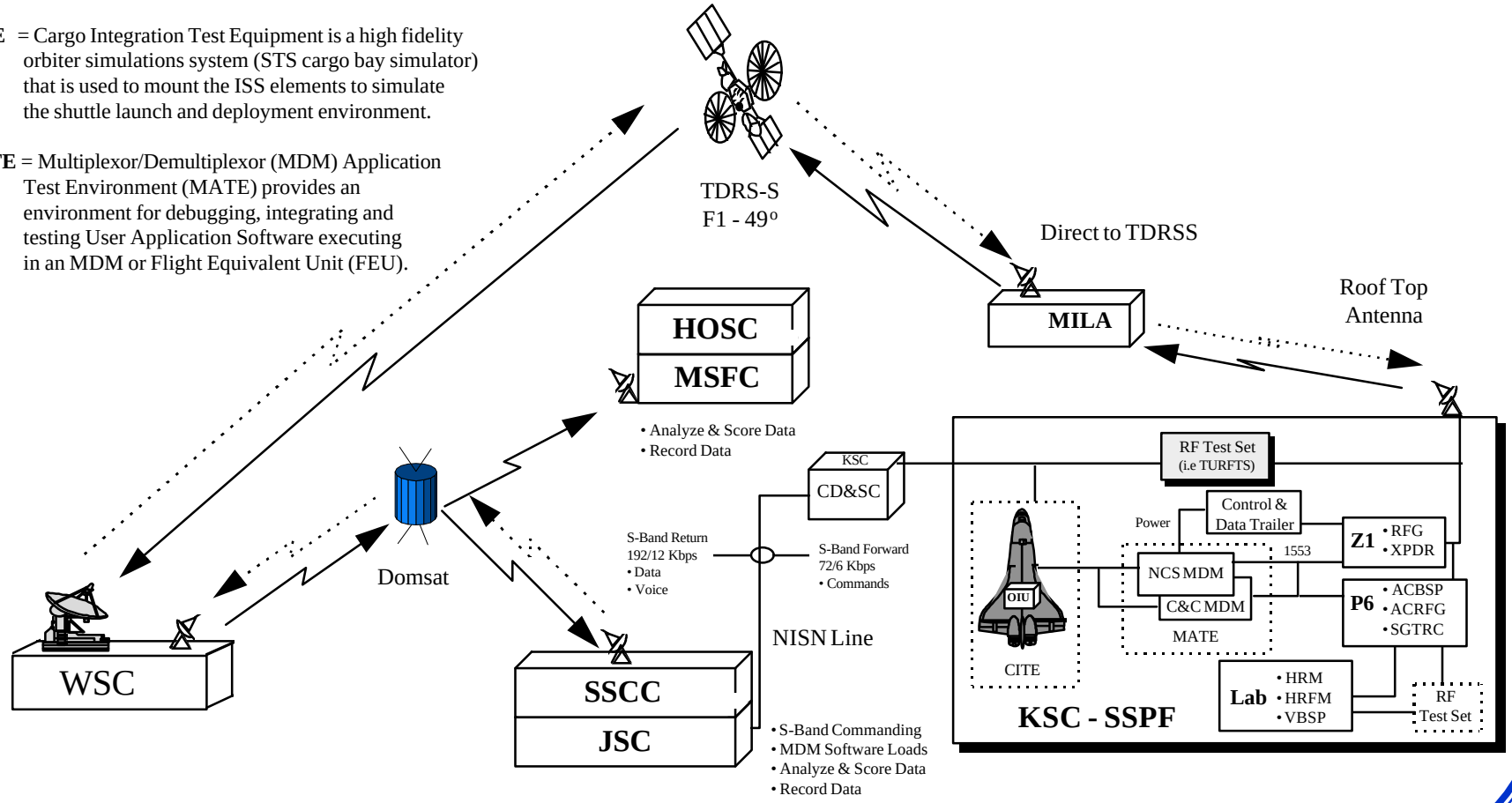

ISS C&T TDRSS TEST STATUS

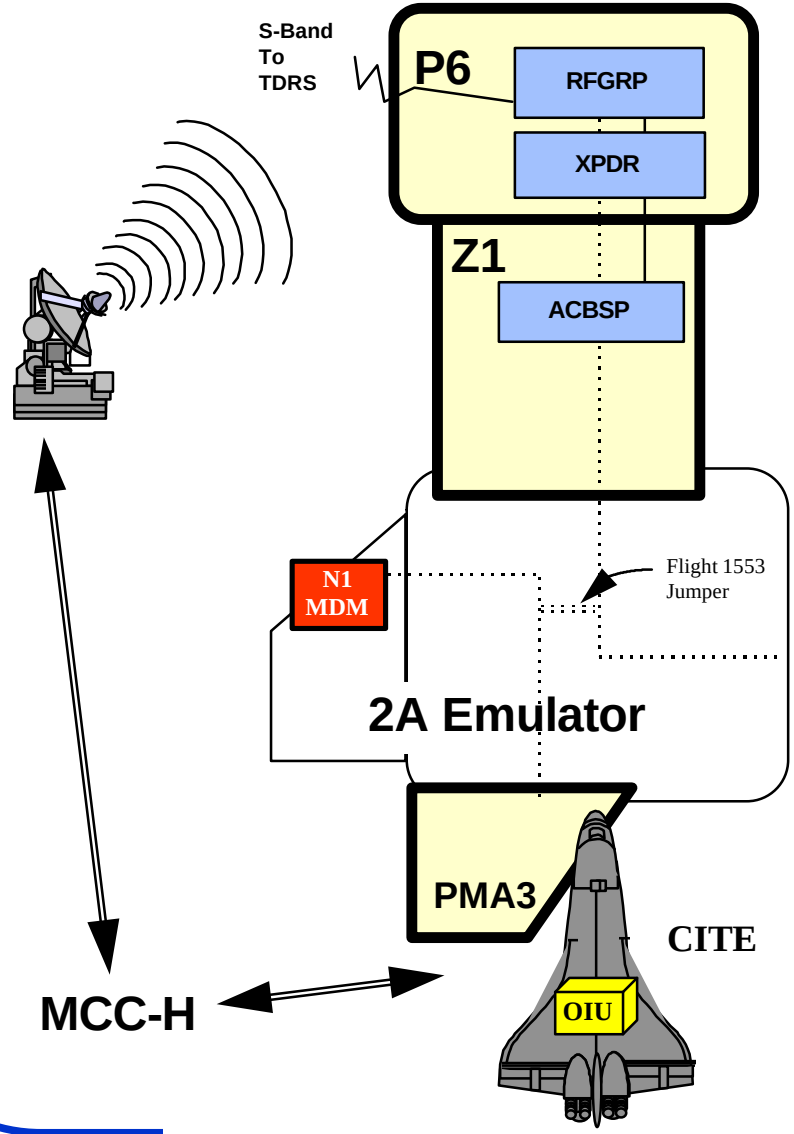

MEIT TEST CONFIGURATION - Continued

C&T MEIT Test Config #1
(3A, 4A)

AUGUST 4 - 14, 1998

TEST OBJECTIVES

S-Band NCS Command and Response

S-Band NCS End-to-End

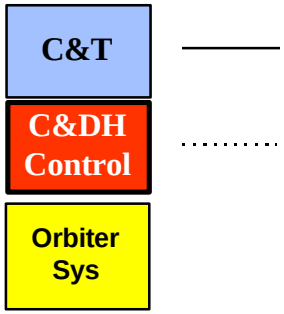

ISS C&T TDRSS TEST STATUS

MEIT TEST CONFIGURATION - Continued

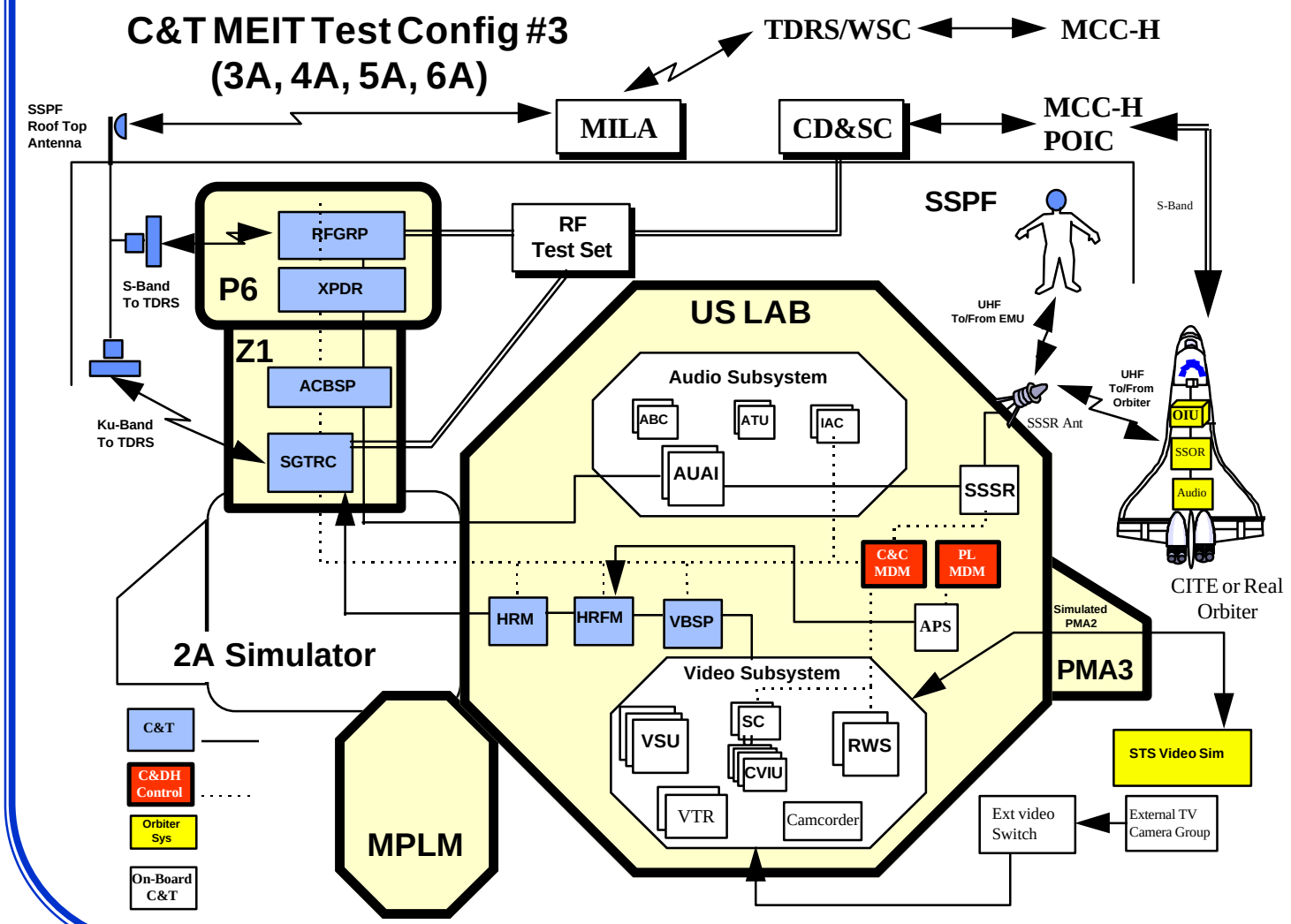

OCTOBER 12-23, 1998

TEST OBJECTIVES

- S-Band CCS Command and Response
- S-Band CCS End-to-End
- EMU End-to-End w/ MCC-H via UHF and S-Band
- UHF End-to-End via Orbiter S-Band
- Setup Ku-Band via S-Band commands from MCC-H
- Ku-Band End-to-End
- Ku-Band Forward Link

ISS C&T TDRSS TEST STATUS

MEIT TEST CONFIGURATION - Continued

NOVEMBER 9-25, 1998

C&T MEIT Test Config #4 (5A, 6A)

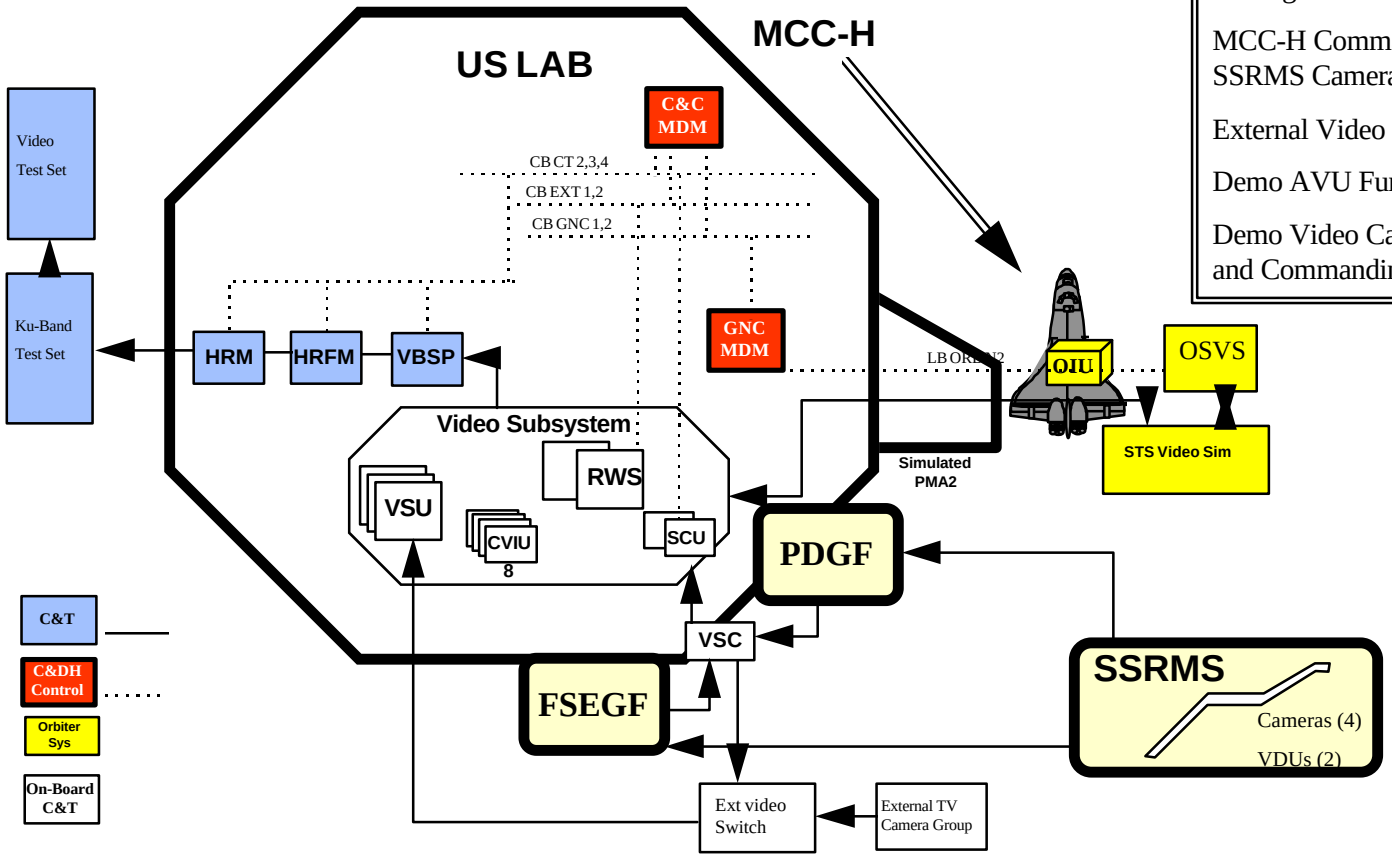

TEST OBJECTIVES

- SSRMS Video and ISS External Video Quality Through Ku-Band
- MCC-H Commanding of SSRMS Cameras an ETVCG
- External Video
- Demo AVU Functions
- Demo Video Camera Routing and Commanding

ISS C&T TDRSS TEST STATUS

NETWORK ISSUES

- Network Issues
  - Baseband/RF Conversion at KSC to be Worked
  - ISS Antenna Performance Test Configuration
  - Transponder CW Mode Commanding
  - Circuit Requirements (50 Mbps Data Flow)
  - WSC Data Record/Playback of 75 Mbps to MSFC

ISS C&T TDRSS TEST STATUS

C&T QUAL & FLIGHT MODEL NETWORK TEST SCHEDULE

TEST TEAM ACTIVITIES

ISS C&T Qual Model (S-Band/Ku-Band)

Test Planning

QM Testing @ Boeing/Seattle (Type A)
- Phase 1: Prerequisite Tests
- Phase 2: Hardline Tests
- Phase 3: Radiated Tests

QM Testing @ JSC/ESTL (Type B)
- Phase 1: Prerequisite Tests
- Phase 2: Hardline Tests
- Phase 3: Radiated Tests
- Phase 4: Radiated EET

ISS C&T MEIT (Flt Model S/Ku-Band)

Test Planning

FM Multi-Element Integ Test (MEIT) @ KSC
- Phase 1 (3A & 4A) - Low Rate S-Band
- Phase 2 (3A,4A,5A) - High Rate S-Band/K-Band
  - >> 3A,4A,5A (no 6A Racks)
  - >> 3A,4A,5A (6A Racks Powered Up)
- Phase 3 (5A & 6A) - SSRMS (no R/T) & Video Cameras

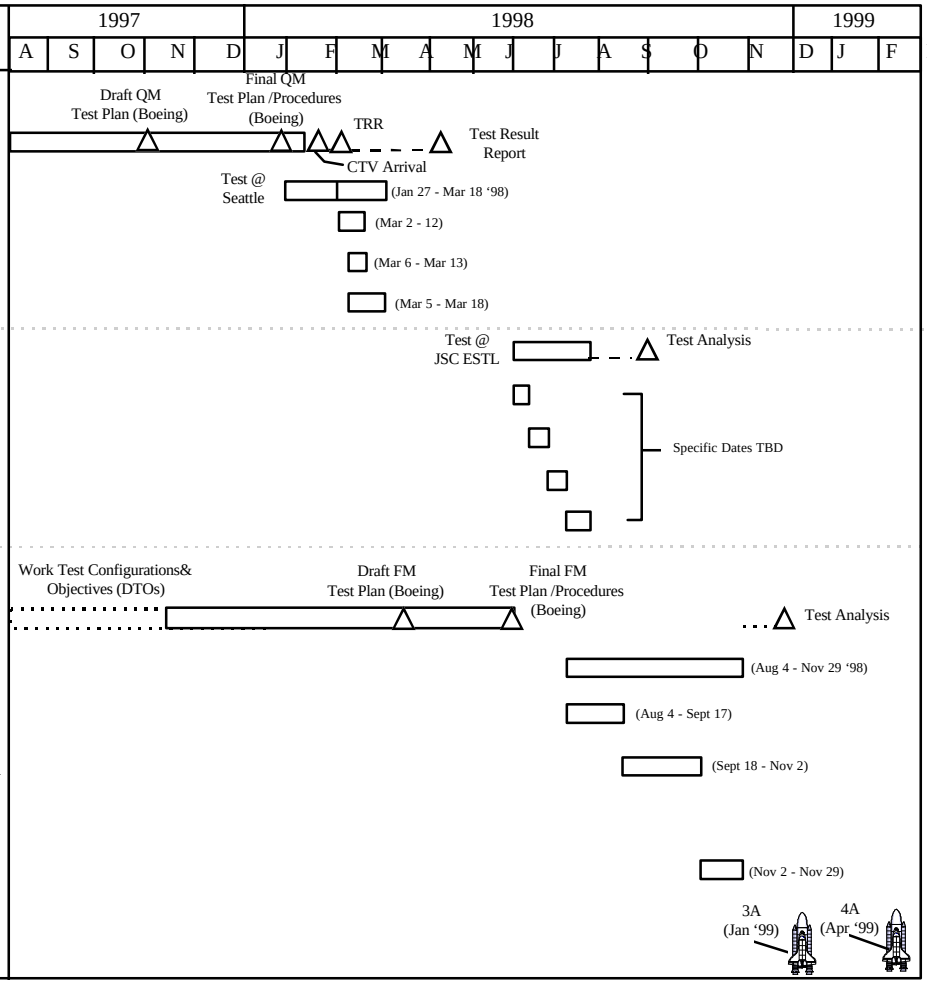

ISS C&T TDRSS TEST STATUS

ACRONYMS

ACBPS	- Assembly Contingency Baseband Signal Processor
ACS	- Assembly Contingency System
ACHGA	- Assembly Contingency High Gain Antenna
ACLGA	- Assembly Contingency Low Gain Antenna
ACRFG	- Assembly Contingency Radio Frequency Group
AIT	- Analysis Integration Team
APM	- Attached Pressurized Module
BER	- Bit Error Rate
BERTS	- Bit Error Rate Test Set
BSP	- Baseband Signal Processor
C&DH	- Command and Data Handling
C&C	- Command and Control
C&T	- Communications and Tracking
CADU	- Channel Access Data Unit
CCS	- Command Control System
CCSDS	- Consultative Committee for Space Data Systems
CD&SC	- Communications Data & Service Center
CITE	- Cargo Integration Test Equipment
CMG	- Command Moment Gyro
C/O	- Check Out
CTV	- Compatibility Test Van
dB	- decibel
dBW	- decibel per watt
DEL	- Data Evaluation Laboratory
DG	- Data Group
DTO	- Detailed Test Objective
DVTM	- Design Verification Test Model
Eb/No	- Energy per Bit to Noise ratio
EET	- End-to-End Test Equipment (WSC
EIRP	- Effective Isotropic Radiated Power
EMI	- Electromagnetic Interference
EMC	- Electromagnetic Compatibility
ESTL	- Electronics Systems Test Lab (JSC)
F/O	- fiber optic
FDF	- Flight Dynamics Facility
FEP	- Front End Processor
FEU	- Flight Equivalent Unit
FM	- Flight Model
FWD	- Forward
GPS	- Global Positioning System
GSFC	- Goddard Space Flight Center
HDR	- High Data Rate
HGA	- High Gain Antenna
HOSC	- Huntsville Operations Support Center (MSFC)
HRFM	- High Rate Frame Mux
HRM	- High Rate Modem
HSI	- Hardware Software Integration
HTML	- HyperText Markup Language
ICD	- Interface Control Document
IF	- Intermediate Frequency
I&T	- Integration and Test
ISS	- International Space Station
IT&V	- Integration Test and Verfication
ITRG	- Integrated Test Requirements Group
JEM	- Japanese Experiment Module
JSC	- Johnson Space Center
Kbps	- kilobits per second
KSAF	- Ku-Band Single Access Forward
KSAR	- Ku-band Single Access Return
KSC	- Kennedy Space Center
LGA	- Low Gain Antenna
LHCP	- Left Hand Circular Polarization
LMCS	- Lockheed Martin Communications Systems
MATE	- MDM Application Test Environment
Mbps	- Megabits per second

ISS C&T TDRSS TEST STATUS

ACRONYMS

MCC	- Mission Control Center
Mcps	- Megacharacters per second
MDA	- McDonnell Douglas Aerospace
MDM	- Multiplexor/Demultiplexor
MEIT	- Multi Element Integration Test
MHz	- Megahetz
MILA	- Merritt Island
MPLM	- Mini Pressurized Logistics Module
MSFC	- Marshall Space Flight Center
NISN	- NASA Information Services Network
NCC	- Network Control Center
NCS	- Node Control System
NTSC	- National Television Standards Committee
OIU	- Orbiter Integration Unit
ORU	- Orbital Replacement Units
OOTMS	- On-Orbit Test Monitoring System (WSC)
PDF	- Portable Data Formatter
PDSS	- Payload Data Services System
PFL	- Probability of Frame Loss
PG	- Product Group
P/L	- Payload
PMA	- Pressurized Mating Adaptor
PN	- Pseudorandom Noise
POIC	- Payload Operations Integration Center
QM	- Qualification Model
QUAL	- Qualification
RF	- Radio Frequency
RF	- Radio Frequency Group
RFSOC	- Radio Frequency Simulations Operations Center
RHCP	- Right Hand Circular Polarization
RS	- Reed-Solomon
RSA	- Russian Space Agency
RTN	- Return
SEC	- Support Equipment Controller
SGANT	- Space-to-Ground Antenna
SGLT	- Space to Ground Link Terminal
SGS	- Space-to-Ground System (Ku-band)
SGSTE	- Space-to-Ground Special Test Equipment
SGSTS	- Space-to-Ground Subsystem Test Set
SGTRC	- Space-to-Ground Transmitter/Receiver Controller
SN	- Space Network
SSAF	- S-band Single Access Forward
SSAR	- S-band Single Access Return
SSCC	- Space Station Control Center
SSPF	- Space Station Processing Facility
STDN	- Space Tracking and Data Network
STE	- Special Test Equipment
STGT	- Second TDRSS Ground Terminal
STS	- Space Transportation System
SVF	- Software Verification Facility
TBD	- To Be Determined
TDRS	- Tracking and Data Relay Satellite
TDRS-W	- Tracking and Data Relay Satellite - West
TDRSS	- Tracking and Data Relay Satellite System
TLM	- Telemetry
TRC	- Transmitter/Receiver Controller
TURFTS	- TDRSS RF Test Set
TV	- Television
US	- United States
VBSP	- Video Baseband Signal Processor
V&V	- Verification and Validation
VSU	- Video Systems Unit
WSC	- White Sands Complex
XPDR	- Transponder
ZOE	- Zone Of Exclusion