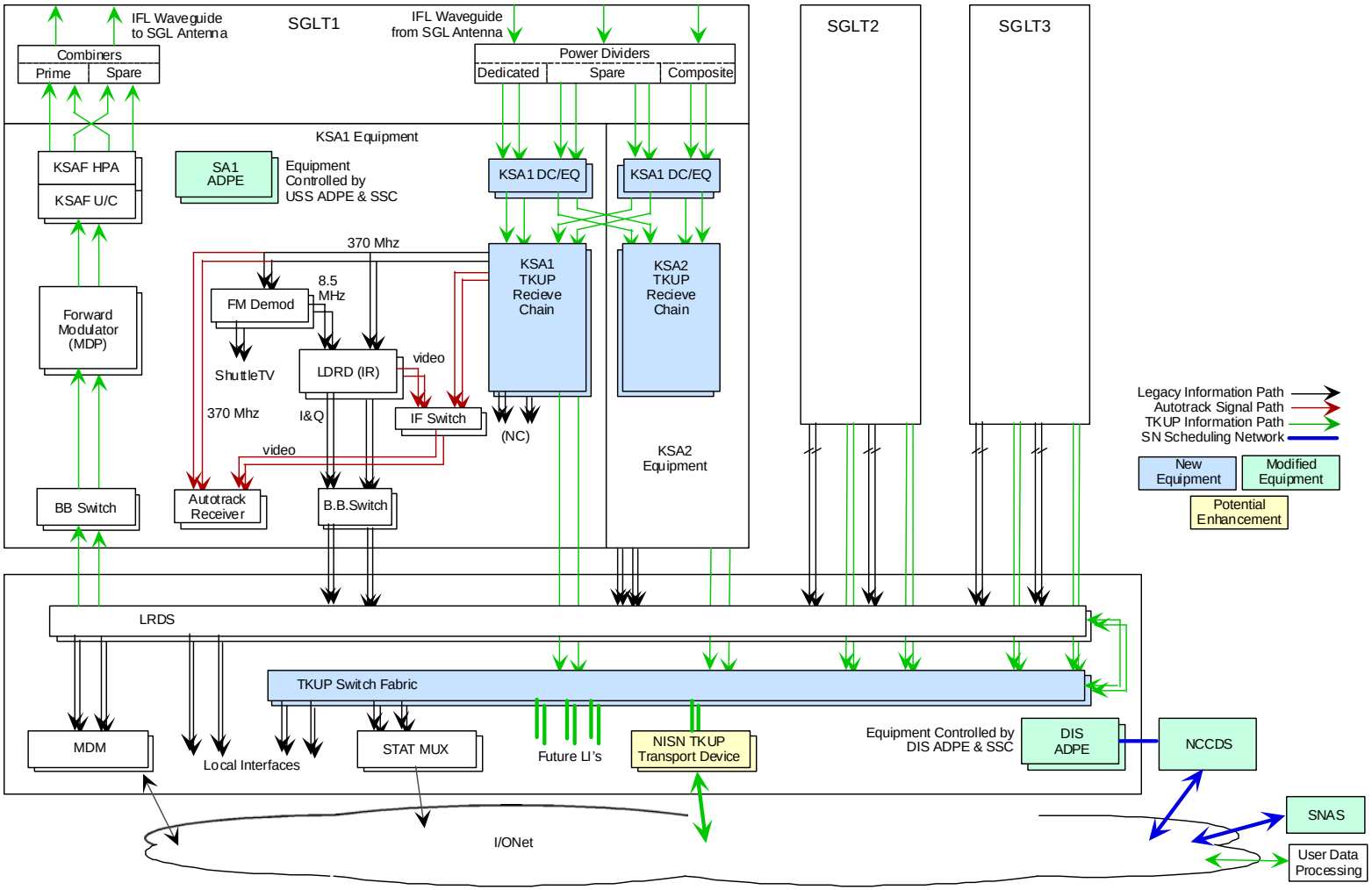Proposed TKUP Architecture